MITSUBISHI ELECTRIC

INVERTER

FR-F800

INSTRUCTION MANUAL (DETAILED)

FR-F820-00046(0.75K) to 04750(110K)
FR-F840-00023(0.75K) to 06830(315K)
FR-F842-07700(355K) to 12120(560K)

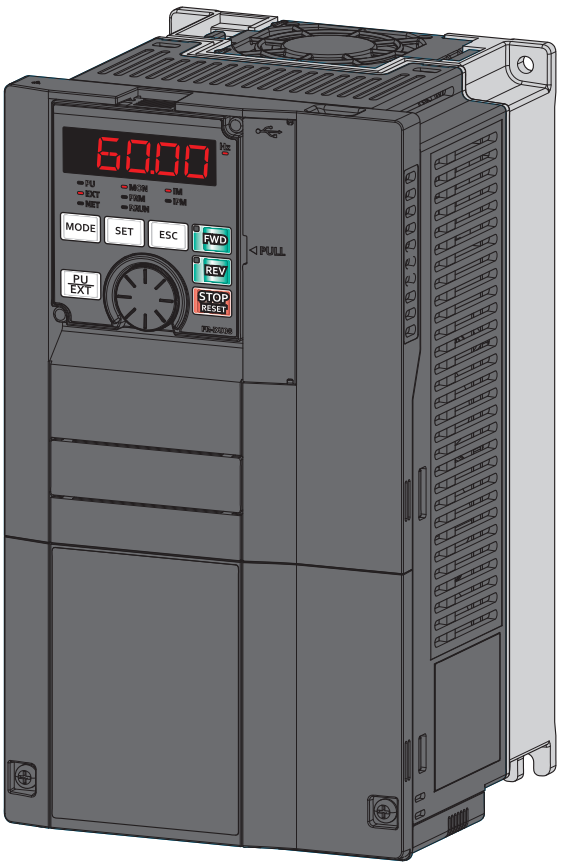

INTRODUCTION 1
INSTALLATION AND WIRING 2
PRECAUTIONS FOR USE OF THE INVERTER 3
BASIC OPERATION 4
PARAMETERS 5
PROTECTIVE FUNCTIONS 6
PRECAUTIONS FOR MAINTENANCE AND INSPECTION 7
SPECIFICATIONS 8

Thank you for choosing this Mitsubishi inverter.
This Instruction Manual (Detailed) provides instructions for advanced use of the FR-F800 series inverters.
Incorrect handling might cause an unexpected fault. Before using this inverter, always carefully read this Instruction Manual and the Instruction Manual (Startup) [IB-0600545] packed with the product to use this product correctly.

Safety Instructions

Do not attempt to install, operate, maintain or inspect the product until you have read through this Instruction Manual (Detailed) and appended documents carefully and can use the equipment correctly. Do not use this product until you have a full knowledge of the equipment, safety information and instructions.
Installation, operation, maintenance and inspection must be performed by qualified personnel. Here, an expert means a person who meets all the conditions below.
• A person who took a proper engineering training. Such training may be available at your local Mitsubishi Electric office. Contact your local sales office for schedules and locations.
• A person who can access operating manuals for the protective devices (e.g. light curtain) connected to the safety control system. A person who has read and familiarized himself/herself with the manuals.

In this Instruction Manual (Detailed), the safety instruction levels are classified into "Warning" and "Caution"

⚠Warning **Incorrect handling may cause hazardous conditions, resulting in death or severe injury.**

⚠Caution **Incorrect handling may cause hazardous conditions, resulting in medium or slight injury, or may cause only material damage.**

The ⚠Caution level may even lead to a serious consequence according to conditions. Both instruction levels must be followed because these are important to personal safety.

◆ Electric Shock Prevention

⚠Warning

- While the inverter power is ON, do not open the front cover or the wiring cover. Do not run the inverter with the front cover or the wiring cover removed. Otherwise you may access the exposed high voltage terminals or the charging part of the circuitry and get an electric shock.
- Even if power is OFF, do not remove the front cover except for wiring or periodic inspection. You may accidentally touch the charged inverter circuits and get an electric shock.
- Before wiring or inspection, LED indication of the operation panel must be switched OFF. Any person who is involved in wiring or inspection shall wait for at least 10 minutes after the power supply has been switched OFF and check that there are no residual voltage using a tester or the like. The capacitor is charged with high voltage for some time after power OFF, and it is dangerous.
- This inverter must be earthed (grounded). Earthing (grounding) must conform to the requirements of national and local safety regulations and electrical code (NEC section 250, IEC 536 class 1 and other applicable standards). A neutral-point earthed (grounded) power supply for 400V class inverter in compliance with EN standard must be used.
- Any person who is involved in wiring or inspection of this equipment shall be fully competent to do the work.
- The inverter must be installed before wiring. Otherwise you may get an electric shock or be injured.
- Setting dial and key operations must be performed with dry hands to prevent an electric shock. Otherwise you may get an electric shock.
- Do not subject the cables to scratches, excessive stress,heavy loads or pinching. Otherwise you may get an electric shock.
- Do not change the cooling fan while power is ON. It is dangerous to change the cooling fan while power is ON.
- Do not touch the printed circuit board or handle the cables with wet hands. Otherwise you may get an electric shock.
- When measuring the main circuit capacitor capacity, the DC voltage is applied to the motor for 1s at powering OFF. Never touch the motor terminal, etc. right after powering OFF to prevent an electric shock.
- An PM motor is a synchronous motor with high-performance magnets embedded in the rotor. Motor terminals holds high-voltage while the motor is running even after the inverter power is turned OFF. Before wiring or inspection, the motor must be confirmed to be stopped. In an application, such as fan and blower, where the motor is driven by the load, a low-voltage manual motor starter must be connected at the inverter's output side, and wiring and inspection must be performed while the motor starter is open. Otherwise you may get an electric shock.

◆ Fire Prevention

⚠Caution

- Inverter must be installed on a nonflammable wall without holes (so that nobody touches the inverter heatsink on the rear side, etc.). Mounting it to or near flammable material may cause a fire.
- If the inverter has become faulty, the inverter power must be switched OFF. A continuous flow of large current may cause a fire.
- Do not connect a resistor directly to the DC terminals P/+ and N/-. Doing so could cause a fire.
- Be sure to perform daily and periodic inspections as specified in the Instruction Manual. If a product is used without any inspection, a burst, breakage, or a fire may occur.

◆ Injury Prevention

⚠Caution

- The voltage applied to each terminal must be the ones specified in the Instruction Manual. Otherwise burst, damage, etc. may occur.
- The cables must be connected to the correct terminals. Otherwise burst, damage, etc. may occur.
- The polarity (+ and -) must be correct. Otherwise burst, damage, etc. may occur.
- While power is ON or for some time after power-OFF, do not touch the inverter as it will be extremely hot. Touching these devices may cause a burn.

◆ Additional Instructions

The following instructions must be also followed. If the product is handled incorrectly, it may cause unexpected fault, an injury, or an electric shock.

⚠Caution

Transportation and Mounting

- Any person who is opening a package using a sharp object, such as a knife and cutter, must wear gloves to prevent injuries caused by the edge of the sharp object.
- The product must be transported in correct method that corresponds to the weight. Failure to do so may lead to injuries.
- Do not stand or rest heavy objects on the product.
- Do not stack the boxes containing inverters higher than the number recommended.
- When carrying the inverter, do not hold it by the front cover; it may fall off or fail.
- During installation, caution must be taken not to drop the inverter as doing so may cause injuries.
- The product must be installed on the surface that withstands the weight of the inverter.
- Do not install the product on a hot surface.
- The mounting orientation of the inverter must be correct.
- The inverter must be installed on a strong surface securely with screws so that it will not drop.
- Do not install or operate the inverter if it is damaged or has parts missing.
- Foreign conductive objects must be prevented from entering the inverter. That includes screws and metal fragments or other flammable substance such as oil.
- As the inverter is a precision instrument, do not drop or subject it to impact.
- The surrounding air temperature for LD model must be between -10 and +50°C (non-freezing). The surrounding air temperature for SLD model must be between -10 and +40°C (non-freezing). Otherwise the inverter may be damaged.
- The ambient humidity must be 95%RH or less (non-condensing). Otherwise the inverter may be damaged. (Refer to page 26 for details.)

⚠ Caution

Transportation and Mounting

- The storage temperature (applicable for a short time, e.g. during transit) must be between -20 and +65°C. Otherwise the inverter may be damaged.
- The inverter must be used indoors (without corrosive gas, flammable gas, oil mist, dust and dirt etc.) Otherwise the inverter may be damaged.
- The inverter must be used at an altitude of 2500 m or less above sea level, with 5.9 m/s^2 or less*1 vibration at 10 to 55 Hz (directions of X, Y, Z axes). Otherwise the inverter may be damaged. (Refer to **page 26** for details.)
- If halogen-based materials (fluorine, chlorine, bromine, iodine, etc.) infiltrate into a Mitsubishi product, the product will be damaged. Halogen-based materials are often included in fumigant, which is used to sterilize or disinfest wooden packages. When packaging, prevent residual fumigant components from being infiltrated into Mitsubishi products, or use an alternative sterilization or disinfection method (heat disinfection, etc.) for packaging. Sterilization of disinfection of wooden package should also be performed before packaging the product.

Wiring

- Do not install a power factor correction capacitor or surge suppressor/capacitor type filter on the inverter output side. These devices on the inverter output side may be overheated or burn out.
- The output side terminals (terminals U, V, and W) must be connected correctly. Otherwise the motor will rotate inversely.
- PM motor terminals (U, V, W) hold high-voltage while the PM motor is running even after the power is turned OFF. Before wiring, the PM motor must be confirmed to be stopped. Otherwise you may get an electric shock.
- Never connect an PM motor to the commercial power supply. Applying the commercial power supply to input terminals (U,V, W) of an PM motor will burn the PM motor. The PM motor must be connected with the output terminals (U, V, W) of the inverter.

Trial run

- Before starting operation, each parameter must be confirmed and adjusted. A failure to do so may cause some machines to make unexpected motions.

*1 2.9 m/s^2 or less for the FR-F840-04320(185K) or higher.

⚠ Warning

Usage

- Everyone must stay away from the equipment when the retry function is set as it will restart suddenly after a trip.
- STOP RESET Since pressing a key may not stop output depending on the function setting status, separate circuit and switch that make an emergency stop (power OFF, mechanical brake operation for emergency stop, etc.) must be provided.
- OFF status of the start signal must be confirmed before resetting the inverter fault. Resetting inverter fault with the start signal ON restarts the motor suddenly.
- Do not use an PM motor for an application where the PM motor is driven by its load and runs at a speed higher than the maximum motor speed.
- Use this inverter only with three-phase induction motors or with an PM motor. Connection of any other electrical equipment to the inverter output may damage the equipment.
- Do not modify the equipment.
- Do not perform parts removal which is not instructed in this manual. Doing so may lead to fault or damage of the product.

⚠ Caution

Usage

- The electronic thermal relay function does not guarantee protection of the motor from overheating. It is recommended to install both an external thermal and PTC thermistor for overheat protection.
- Do not use a magnetic contactor on the inverter input for frequent starting/stopping of the inverter. Otherwise the life of the inverter decreases.
- The effect of electromagnetic interference must be reduced by using a noise filter or by other means. Otherwise nearby electronic equipment may be affected.
- Appropriate measures must be taken to suppress harmonics. Otherwise power supply harmonics from the inverter may heat/ damage the power factor correction capacitor and generator.
- When driving a 400V class motor by the inverter, the motor must be an insulation-enhanced motor or measures must be taken to suppress surge voltage. Surge voltage attributable to the wiring constants may occur at the motor terminals, deteriorating the insulation of the motor.
- When parameter clear or all parameter clear is performed, the required parameters must be set again before starting operations. because all parameters return to their initial values.
- The inverter can be easily set for high-speed operation. Before changing its setting, the performances of the motor and machine must be fully examined.
- Stop status cannot be hold by the inverter's brake function. In addition to the inverter's brake function, a holding device must be installed to ensure safety.
- Before running an inverter which had been stored for a long period, inspection and test operation must be performed.
- Static electricity in your body must be discharged beforeyou touch the product.
- Only one PM motor can be connected to an inverter.
- An PM motor must be used under PM motor control. Do not use a synchronous motor, induction motor, or synchronous induction motor.
- Do not connect an PM motor in the induction motor control settings (initial settings). Do not use an induction motor in the PM motor control settings. It will cause a failure.
- In the system with an PM motor, the inverter power must be turned ON before closing the contacts of the contactor at the output side.
- When the emergency drive operation is performed, the operation is continued or the retry is repeated even when a fault occurs, which may damage or burn the inverter and motor. Before restarting the normal operation after using the emergency drive function, make sure that the inverter and motor have no fault.

Emergency stop

- A safety backup such as an emergency brake must be provided to prevent hazardous conditions to the machine and equipment in case of inverter failure.
- When the breaker on the inverter input side trips, thewiring must be checked for fault (short circuit), and internalparts of the drive unit for a damage, etc. The cause of the trip must be identified and removed before turning ON the power of the breaker.
- When a protective function activates, take an appropriate corrective action, then reset the inverter, and resume the operation.

Maintenance, inspection and parts replacement

- Do not carry out a megger (insulation resistance) test on the control circuit of the inverter. It will cause a failure.

Disposal

- The inverter must be treated as industrial waste.

General instruction

- Many of the diagrams and drawings in the Instruction Manual show the product without a cover or partially open for explanation. Never operate the product in this manner. The cover must be always reinstalled and the instruction in the Instruction Manual must be followed when operating the product. For more details on the PM motor, refer to the Instruction Manual of the PM motor.

CONTENTS

1 INTRODUCTION 11

1.1 Product checking and accessories 12

1.2 Component names 14

1.3 Operation steps 15

1.4 About the related manuals 16

2 INSTALLATION AND WIRING 17

2.1 Peripheral devices 18

2.1.1 Inverter and peripheral devices 18
2.1.2 Peripheral devices 20

2.2 Removal and reinstallation of the operation panel or the front covers 22

2.3 Installation of the inverter and enclosure design 26

2.3.1 Inverter installation environment 26
2.3.2 Cooling system types for inverter enclosure 28
2.3.3 Inverter installation 29
2.3.4 Heatsink protrusion attachment procedure 31

2.4 Terminal connection diagrams 33

2.5 Main circuit terminals 37

2.5.1 Details on the main circuit terminals 37
2.5.2 Terminal layout of the main circuit terminals, wiring of power supply and the motor 38
2.5.3 Applicable cables and the wiring length 41
2.5.4 Earthing (grounding) precautions 45

2.6 Control circuit 46

2.6.1 Details on the control circuit terminals 46
2.6.2 Control logic (sink/source) change 50
2.6.3 Wiring of control circuit 52
2.6.4 Wiring precautions 54
2.6.5 When using separate power supplies for the control circuit and the main circuit 55
2.6.6 When supplying 24 V external power to the control circuit 57
2.6.7 Safety stop function 58

2.7 Communication connectors and terminals 60

2.7.1 PU connector 60
2.7.2 USB connector 61
2.7.3 RS-485 terminal block 62

2.8 Connection of stand-alone option units 63

2.8.1 Connection of the brake unit (FR-BU2) 63
2.8.2 Connection of the brake unit (FR-BU) 65
2.8.3 Connection of the brake unit (BU type) 65
2.8.4 Connection of the high power factor converter (FR-HC2) 66
2.8.5 Connection of the power regeneration common converter (FR-CV) 67
2.8.6 Connection of the power regeneration converter (MT-RC) 68
2.8.7 Connection of the DC reactor (FR-HEL) 69

3 PRECAUTIONS FOR USE OF THE INVERTER 71

3.1 Electro-magnetic interference (EMI) and leakage currents 72

3.1.1 Leakage currents and countermeasures ... 72
3.1.2 Countermeasures against inverter-generated EMI ... 74
3.1.3 Built-in EMC filter ... 76

3.2 Power supply harmonics 77

3.2.1 Power supply harmonics ... 77
3.2.2 Harmonic suppression guidelines ... 78

3.3 Installation of a reactor 80

3.4 Power-OFF and magnetic contactor (MC) 81

3.5 Countermeasures against deterioration of the 400 V class motor insulation 82

3.6 Checklist before starting operation 83

3.7 Failsafe system which uses the inverter 85

4 BASIC OPERATION 87

4.1 Operation panel (FR-DU08) 88

4.1.1 Components of the operation panel (FR-DU08) ... 88
4.1.2 Basic operation of the operation panel ... 89
4.1.3 Correspondences between digital and actual characters ... 90
4.1.4 Changing the parameter setting value ... 91

4.2 Monitoring the inverter status 92

4.2.1 Monitoring of output current and output voltage ... 92
4.2.2 First monitored item ... 92
4.2.3 Displaying the set frequency ... 92

4.3 Easy operation mode setting (easy setting mode) 93

4.4 Frequently-used parameters (simple mode parameters) 95

4.4.1 Simple mode parameter list ... 95

4.5 Basic operation procedure (PU operation) 97

4.5.1 Operating at a set frequency (example: operating at 30 Hz) ... 97
4.5.2 Using the setting dial like a potentiometer to perform operation ... 98
4.5.3 Setting the frequency by switches (multi-speed setting) ... 99
4.5.4 Setting the frequency with analog signals (voltage input) ... 100
4.5.5 Using an analog signal (current input) to give a frequency command ... 101

4.6 Basic operation procedure (External operation) 102

4.6.1 Using the frequency set by the operation panel ... 102
4.6.2 Setting the frequency by switches (multi-speed setting) (Pr.4 to Pr.6) ... 104
4.6.3 Setting the frequency with analog signals (voltage input) ... 105
4.6.4 Changing the frequency (60 Hz, initial value) at the maximum voltage input (5 V, initial value) ... 106
4.6.5 Using an analog signal (current input) to give a frequency command ... 107
4.6.6 Changing the frequency (60 Hz, initial value) at the maximum current input (at 20 mA, initial value) ... 108

4.7 Basic operation procedure (JOG operation) 109

4.7.1 Performing JOG operation using external signals 109
4.7.2 JOG operation from the operation panel 110

5 PARAMETERS 111

5.1 Parameter List 112

5.1.1 Parameter list (by parameter number) 112
5.1.2 Group parameter display 133
5.1.3 Parameter list (by function group) 134

5.2 Control method 141

5.2.1 Changing the control method 143
5.2.2 Selecting the Advanced magnetic flux vector control 147
5.2.3 Selecting the PM motor control 149

5.3 Speed control under PM motor control 153

5.3.1 Setting procedure of PM motor control 153
5.3.2 Performing high-accuracy, fast-response control (gain adjustment for PM motor control) 154
5.3.3 Troubleshooting in the speed control 157
5.3.4 Torque detection filter 158

5.4 (E) Environment setting parameters 159

5.4.1 Real time clock function 160
5.4.2 Reset selection/disconnected PU detection/PU stop selection 162
5.4.3 PU display language selection 164
5.4.4 Buzzer control 164
5.4.5 PU contrast adjustment 165
5.4.6 Display-off mode 165
5.4.7 Resetting USB host errors 165
5.4.8 Setting dial potentiometer mode/key lock operation selection 166
5.4.9 Frequency change increment amount setting 167
5.4.10 Multiple rating setting 168
5.4.11 Using the power supply exceeding 480 V 168
5.4.12 Parameter write selection 169
5.4.13 Password function 171
5.4.14 Free parameter 173
5.4.15 Setting multiple parameters as a batch 173
5.4.16 Extended parameter display and user group function 177
5.4.17 PWM carrier frequency and Soft-PWM control 179
5.4.18 Inverter parts life display 180
5.4.19 Maintenance timer alarm 184
5.4.20 Current average value monitor signal 185

5.5 (F) Setting of acceleration/deceleration time and acceleration/deceleration pattern 187

5.5.1 Setting the acceleration and deceleration time 187
5.5.2 Acceleration/deceleration pattern 191
5.5.3 Remote setting function 194
5.5.4 Starting frequency and start-time hold function 197
5.5.5 Minimum motor speed frequency 198

5.6 (D) Operation command and frequency command 199

5.6.1 Operation mode selection 200
5.6.2 Startup in Network operation mode at power-ON 209
5.6.3 Start command source and frequency command source during communication operation 210
5.6.4 Reverse rotation prevention selection 217
5.6.5 Frequency setting via pulse train input 218
5.6.6 JOG operation 221

5.6.7 Operation by multi-speed setting 222

5.7 (H) Protective function parameter 224

5.7.1 Motor overheat protection (electronic thermal O/L relay) 225
5.7.2 Cooling fan operation selection 233
5.7.3 Earth (ground) fault detection at start 234
5.7.4 Varying the activation level of the undervoltage protective function 234
5.7.5 Initiating a protective function 235
5.7.6 I/O phase loss protection selection 235
5.7.7 Retry function 236
5.7.8 Emergency drive 238
5.7.9 Limiting the output frequency (maximum/minimum frequency) 245
5.7.10 Avoiding the mechanical resonance points (frequency jump) 246
5.7.11 Stall prevention operation 248
5.7.12 Load characteristics fault detection 255
5.7.13 Motor overspeeding detection *259*

5.8 (M) Monitor display and monitor output signal 260

5.8.1 Speed display and rotations per minute setting 261
5.8.2 Monitor indicator selection using operation panel or via communication 263
5.8.3 Monitor display selection for terminals FM/CA and AM 273
5.8.4 Monitor display selection for terminals FM/CA and AM 279
5.8.5 Energy saving monitor 283
5.8.6 Output terminal function selection 288
5.8.7 Output frequency detection 294
5.8.8 Output current detection function 296
5.8.9 Output torque detection 298
5.8.10 Remote output function 298
5.8.11 Analog remote output function 300
5.8.12 Fault code output selection 302
5.8.13 Pulse train output of output power 303
5.8.14 Detection of control circuit temperature 304

5.9 (T) Multi-Function Input Terminal Parameters 305

5.9.1 Analog input selection 306
5.9.2 Analog input terminal (terminal 1, 4) function assignment 310
5.9.3 Analog input compensation 311
5.9.4 Analog input responsiveness and noise elimination 313
5.9.5 Frequency setting voltage (current) bias and gain 314
5.9.6 Bias and gain for voltage (current) setting of stall prevention operation level 320
5.9.7 Checking of current input on analog input terminal 325
5.9.8 Input terminal function selection 329
5.9.9 Inverter output shutoff signal 332
5.9.10 Selecting operation condition of the second function selection signal (RT) 333
5.9.11 Start signal operation selection 335

5.10 (C) Motor constant parameters 337

5.10.1 Applied motor 337
5.10.2 Offline auto tuning 341
5.10.3 Offline auto tuning for a PM motor (motor constants tuning) 351
5.10.4 Online auto tuning 359

5.11 (A) Application parameters 362

5.11.1 Electronic bypass function 363
5.11.2 Self power management 370
5.11.3 Traverse function 373
5.11.4 Cleaning function 375
5.11.5 PID control 378
5.11.6 PID gain tuning 394
5.11.7 Changing the display increment of the numerical values used in PID control 399

5.11.8 PID pre-charge function 402
5.11.9 Multi-pump function (Advanced PID function) 406
5.11.10 Automatic restart after instantaneous power failure/flying start with an induction motor 414
5.11.11 Automatic restart after instantaneous power failure/flying start with an IPM motor 420
5.11.12 Offline auto tuning for a frequency search 422
5.11.13 Power failure time deceleration-to-stop function 426
5.11.14 PLC function 431
5.11.15 Trace function 433

5.12 (N) Operation via communication and its settings 441

5.12.1 Wiring and configuration of PU connector 441
5.12.2 Wiring and configuration of RS-485 terminals 443
5.12.3 Initial setting of operation via communication 446
5.12.4 Initial settings and specifications of RS-485 communication 449
5.12.5 Mitsubishi inverter protocol (computer link communication) 451
5.12.6 Modbus-RTU communication specification 465
5.12.7 BACnet MS/TP protocol 480
5.12.8 USB device communication 493
5.12.9 Automatic connection with GOT 494

5.13 (G) Control parameters 495

5.13.1 Manual torque boost 496
5.13.2 Base frequency, voltage 497
5.13.3 Load pattern selection 499
5.13.4 Energy saving control 500
5.13.5 Adjustable 5 points V/F 501
5.13.6 SF-PR slip amount adjustment mode 502
5.13.7 DC injection brake 502
5.13.8 Output stop function 505
5.13.9 Stop selection 507
5.13.10 Regenerative brake selection and DC feeding mode 508
5.13.11 Regeneration avoidance function 514
5.13.12 Increased magnetic excitation deceleration 517
5.13.13 Slip compensation 518
5.13.14 Speed smoothing control 519

5.14 Parameter clear / all parameter clear 520

5.15 Copying and verifying parameters on the operation panel 521

5.15.1 Parameter copy 521
5.15.2 Parameter verification 523

5.16 Copying and verifying parameters using USB memory 524

5.17 Checking parameters changed from their initial values (Initial value change list) 527

6 PROTECTIVE FUNCTIONS 529

6.1 Inverter fault and alarm indications 530

6.2 Reset method for the protective functions 530

6.3 Check and clear of the faults history 531

6.4 The list of fault displays 533

6.5 Causes and corrective actions 535

6.6 Check first when you have a trouble 552

6.6.1 Motor does not start ... 552
6.6.2 Motor or machine is making abnormal acoustic noise ... 554
6.6.3 Inverter generates abnormal noise ... 554
6.6.4 Motor generates heat abnormally ... 555
6.6.5 Motor rotates in the opposite direction ... 555
6.6.6 Speed greatly differs from the setting ... 555
6.6.7 Acceleration/deceleration is not smooth ... 556
6.6.8 Speed varies during operation ... 556
6.6.9 Operation mode is not changed properly ... 557
6.6.10 Operation panel (FR-DU08) display is not operating ... 557
6.6.11 Motor current is too large ... 557
6.6.12 Speed does not accelerate ... 558
6.6.13 Unable to write parameter setting ... 559
6.6.14 Power lamp is not lit ... 559

7 PRECAUTIONS FOR MAINTENANCE AND INSPECTION 561

7.1 Inspection item 562

7.1.1 Daily inspection ... 562
7.1.2 Periodic inspection ... 562
7.1.3 Daily and periodic inspection ... 563
7.1.4 Checking the inverter and converter modules ... 565
7.1.5 Cleaning ... 565
7.1.6 Replacement of parts ... 566
7.1.7 Inverter replacement ... 570

7.2 Measurement of main circuit voltages, currents and powers 571

7.2.1 Measurement of powers ... 573
7.2.2 Measurement of voltages and use of PT ... 573
7.2.3 Measurement of currents ... 574
7.2.4 Use of CT and transducer ... 574
7.2.5 Measurement of inverter input power factor ... 574
7.2.6 Measurement of converter output voltage (across terminals P and N) ... 574
7.2.7 Measurement of inverter output frequency ... 575
7.2.8 Insulation resistance test using megger ... 575
7.2.9 Pressure test ... 575

8 SPECIFICATIONS 577

8.1 Inverter rating 578

8.2 Motor rating 580

8.2.1 Premium high-efficiency IPM motor [MM-EFS (1500 r/min) series] ... 580
8.2.2 Premium high-efficiency IPM motor [MM-THE4 (1500 r/min) series] ... 582

8.3 Common specifications 583

8.4 Outline dimension drawings 585

8.4.1 Inverter outline dimension drawings ... 585
8.4.2 Dedicated motor outline dimension drawings ... 590

APPENDIX 593

Appendix1 For customers replacing the conventional model with this inverter 594
Appendix2 Specification comparison between PM motor control and induction motor control 596
Appendix3 Parameters (functions) and instruction codes under different control methods 597
Appendix4 For customers using HMS network options 610

MEMO

1 INTRODUCTION

The contents described in this chapter must be read before using this product.
Always read the instructions before using the equipment.
For the "INTRODUCTION" of the separated converter type, refer to the FR-F802 (Separated Converter Type) Instruction Manual (Hardware) [IB-0600550ENG].

1.1 Product checking and accessories 12
1.2 Component names 14
1.3 Operation steps 15
1.4 About the related manuals 16

<Abbreviations>

DU	Operation panel (FR-DU08)
Operation panel	Operation panel (FR-DU08) and LCD operation panel (FR-LU08)
Parameter unit	Parameter unit (FR-PU07)
PU	Operation panel and parameter unit
Inverter	Mitsubishi inverter FR-F800 series
Pr.	Parameter number (Number assigned to function)
PU operation	Operation using the PU (operation panel/parameter unit)
External operation	Operation using the control circuit signals
Combined operation	Combined operation using the PU (operation panel/parameter unit) and External operation
Mitsubishi standard motor	SF-JR
Mitsubishi constant-torque motor	SF-HRCA
Mitsubishi IPM motor	MM-EFS/MM-THE4

<Trademarks>

- Microsoft and Visual C++ are registered trademarks of Microsoft Corporation in the United States and other countries.
- BACnet® is a registered trademark of the ASHRAE (American Society of Heating, Refrigerating and Air-Conditioning Engineers).
- Other company and product names herein are the trademarks and registered trademarks of their respective owners.

<Notes on descriptions in this Instruction Manual>

- Connection diagrams in this Instruction Manual appear with the control logic of the input terminals as sink logic, unless otherwise specified. (For the control logic, refer to **page 50**.)

Harmonic Suppression Guidelines
All the models of the inverters used by specific consumers are covered by "the Harmonic Suppression Guidelines for Consumers Who Receive High Voltage or Special High Voltage". (For details, refer to **page 78**.)

1.1 Product checking and accessories

Unpack the product and check the rating plate and the capacity plate of the inverter to ensure that the model agrees with the order and the product is intact.

●Inverter model

Symbol	Voltage class
2	200V class
4	400V class

Symbol	Structure, functionality
0	Standard model
2	Separated converter type

Symbol	Description
00023 to 12120	SLD rated inverter current (A)
0.75K to 560K	LD rated inverter capacity (kW)

Symbol	Type*1
-1	FM
-2	CA

FR-F820-00046-1 □

Symbol	Circuit board coating (conforming to IEC60721-3-3 3C2/3S2)	Plated conductor
Not used	Not used	Not used
-60	With	Not used
-06	With	With

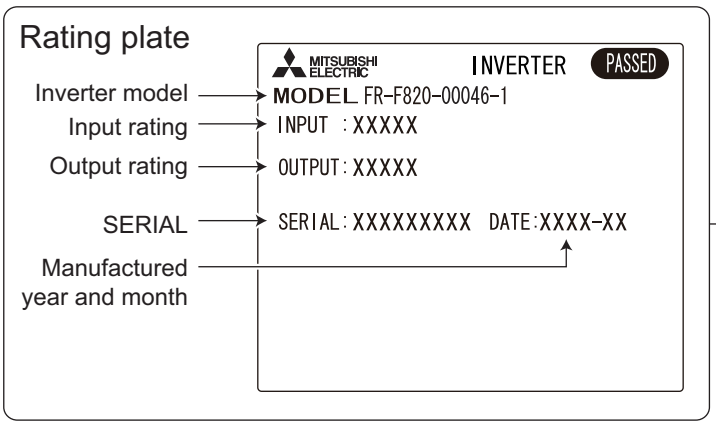

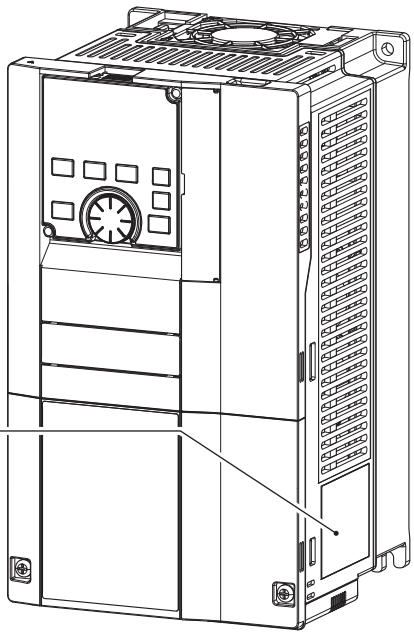

*1 Specification differs by the type. Major differences are shown in the table below.

Type	Monitor output	Initial setting				
		Built-in EMC filter	Control logic	Rated frequency	Pr.19 Base frequency voltage	Pr.570 Multiple rating setting
FM (terminal FM equipped model)	Terminal FM (pulse train output) Terminal AM (analog voltage output (0 to ±10 VDC))	OFF	Sink logic	60 Hz	9999 (same as the power supply voltage)	1 (LD rating)
CA (terminal CA equipped model)	Terminal CA (analog current output (0 to 20 mADC)) Terminal AM (analog voltage output (0 to ±10 VDC))	ON	Source logic	50 Hz	8888 (95% of the power supply voltage)	0 (SLD rating)

NOTE

- Hereinafter, the inverter model name consists of the rated current and the applicable motor capacity.
  (Example) FR-F820-00046(0.75K)

● Accessory

• Fan cover fixing screws

These screws are necessary for compliance with the EU Directives. **(Refer to Instruction Manual (Startup).)**

Capacity	Screw size (mm)	Quantity
FR-F820-00105(2.2K) to FR-F820-00250(5.5K) FR-F840-00083(3.7K), FR-F840-00126(5.5K)	M3 × 35	1
FR-F820-00340(7.5K), FR-F820-00490(11K) FR-F840-00170(7.5K), FR-F840-00250(11K)	M3 × 35	2
FR-F820-00630(15K) to FR-F820-00930(22K) FR-F840-00310(15K) to FR-F840-00620(30K)	M4 × 40	2

• Eyebolt for hanging the inverter

Capacity	Eyebolt Size	Quantity
FR-F840-04320(185K) to FR-F840-06830(315K)	M12	2

● How to read the SERIAL number

Rating plate example

□ ○ ○ ○○○○○○

Symbol Year Month Control number

SERIAL

The SERIAL consists of one symbol, two characters indicating the production year and month, and six characters indicating the control number. The last digit of the production year is indicated as the Year, and the Month is indicated by 1 to 9, X (October), Y (November), or Z (December).

1.2 Component names

Component names are shown below.

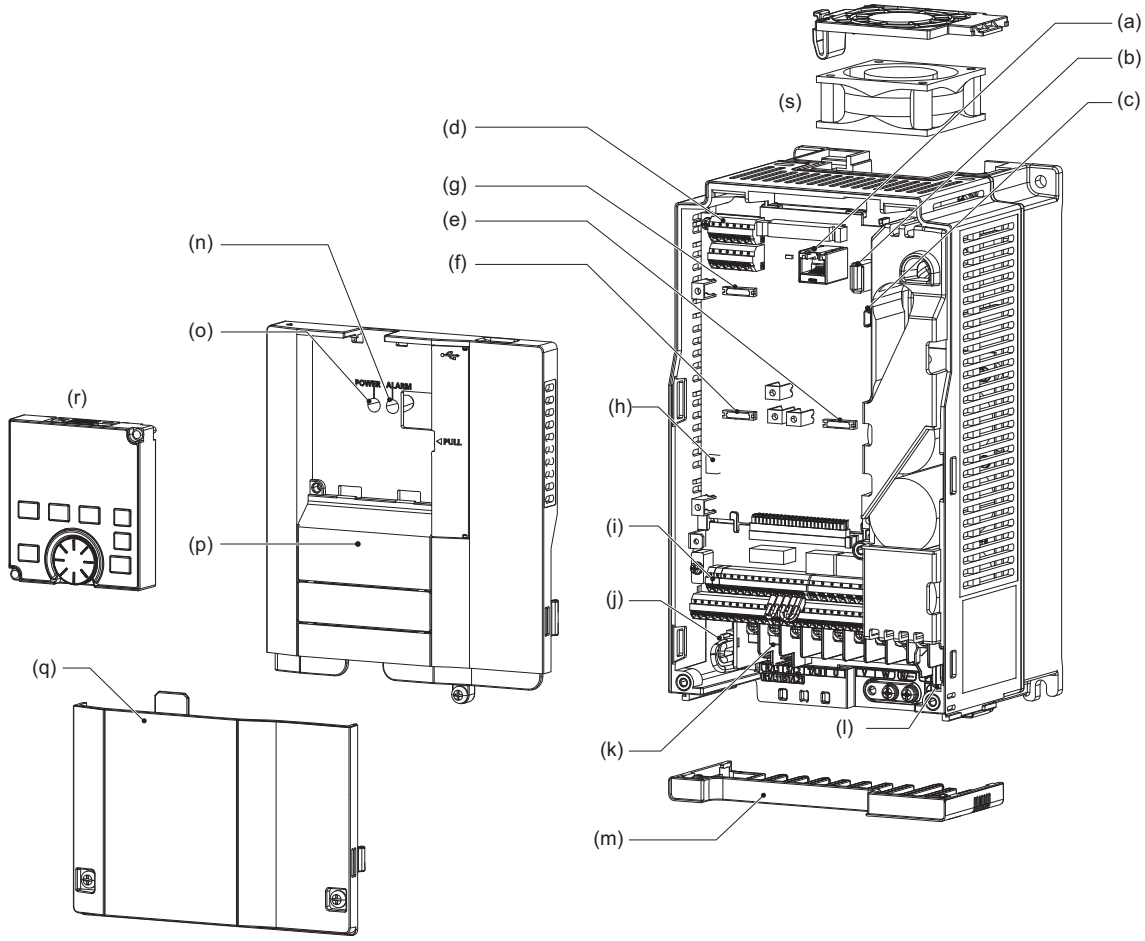

Symbol	Name	Description	Refer to page
(a)	PU connector	Connects the operation panel or the parameter unit. This connector also enables the RS-485 communication.	60
(b)	USB A connector	Connects a USB memory device.	61
(c)	USB mini B connector	Connects a personal computer and enables communication with FR Configurator2.	61
(d)	RS-485 terminals	Enables RS-485, Modbus-RTU communication and BACnet communication.	62
(e)	Plug-in option connector1	Connects a plug-in option or a communication option.	Instruction Manual of the option
(f)	Plug-in option connector2		
(g)	Plug-in option connector3		
(h)	Voltage/current input switch	Selects between voltage and current for the terminal 2 and 4 inputs.	306
(i)	Control circuit terminal block	Connects cables for the control circuit.	46
(j)	EMC filter ON/OFF connector	Turns ON/OFF the EMC filter.	76
(k)	Main circuit terminal block	Connects cables for the main circuit.	37
(l)	Charge lamp	Stays ON while the power is supplied to the main circuit.	38
(m)	Wiring cover	This cover is removable without unplugging cables. (FR-F820-01250(30K) or lower, FR-F840-00620(30K) or lower)	40
(n)	Alarm lamp	Turns ON when the protective function of the inverter is activated.	38
(o)	Power lamp	Stays ON while the power is supplied to the control circuit (R1/L11, S1/L21).	38
(p)	Front cover (upper side)	Remove this cover for the installation of the product, installation of a plug-in (communication) option, RS-485 terminal wiring, switching of the voltage/ current input switch, etc.	22
(q)	Front cover (lower side)	Remove this cover for wiring.	22
(r)	Operation panel (FR-DU08)	Operates and monitors the inverter.	88
(s)	Cooling fan	Cools the inverter. (FR-F820-00105(2.2K) or higher, FR-F840-00083(3.7K) or higher.)	567

1.3 Operation steps

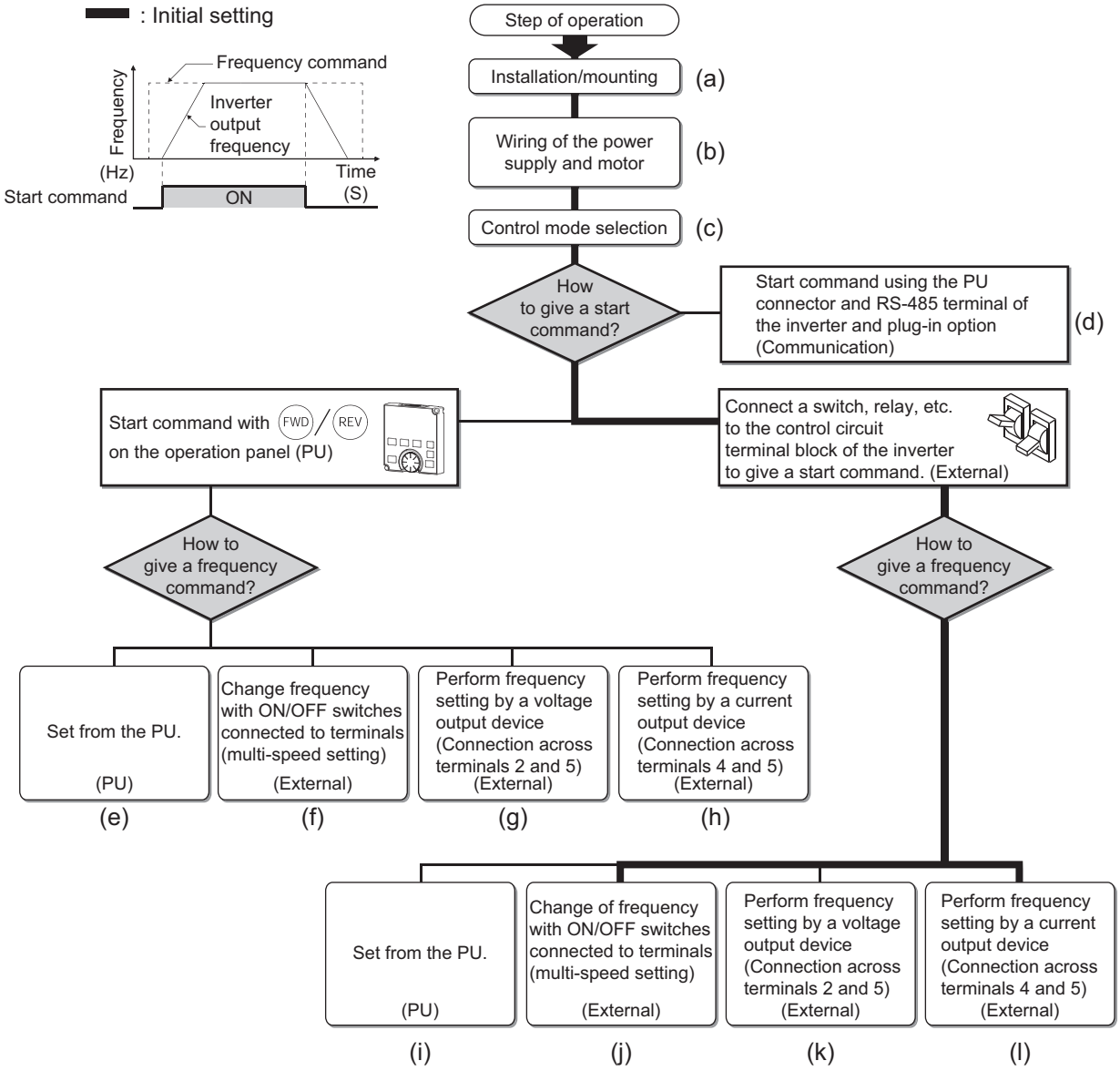

Symbol	Overview	Refer to page
(a)	Install the inverter.	26
(b)	Perform wiring for the power supply and the motor.	38
(c)	Select the control method (V/F control, Advanced magnetic flux vector control, or PM motor control).	143
(d)	Input the start command via communication.	441
(e)	The PU gives both start and frequency commands. (PU operation mode)	97
(f)	The PU gives a start command, and inputs to terminal RH, RM, and RL give a frequency command. (External/PU combined operation mode 2)	99
(g)	The PU gives a start command, and voltage input to terminal 2 gives a frequency command. (External/PU combined operation mode 2)	100
(h)	The PU gives a start command, and current input to terminal 4 gives a frequency command. (External/PU combined operation mode 2)	101
(i)	Inputs to terminal STF and STR give a start command, and the PU gives a frequency command. (External/PU combined operation mode 1)	102
(j)	Inputs to terminal STF and STR give a start command, and inputs to terminal RH, RM, and RL give a frequency command. (External operation mode)	104
(k)	Inputs to terminal STF and STR give a start command, and voltage input to terminal 2 gives a frequency command. (External operation mode)	105
(l)	Inputs to terminal STF and STR give a start command, and current input to terminal 4 gives a frequency command. (External operation mode)	107

1.4 About the related manuals

The manuals related to FR-F800 are shown below.

Manual name	Manual number
FR-F800 Instruction Manual (Startup)	IB-0600545
FR-F802 (Separated Converter Type) Instruction Manual (Hardware)	IB-0600550ENG
FR-CC2 (Converter unit) Instruction Manual	IB-0600543ENG
FR Configurator 2 Instruction Manual	IB-0600516ENG
FR-A800/F800 PLC function programming manual	IB-0600492ENG
FR-A800/F800 Safety stop function instruction manual	BCN-A23228-001

2 INSTALLATION AND WIRING

This chapter explains the "installation" and the "wiring" of this product.
Always read the instructions before using the equipment.
For the "INSTALLATION AND WIRING" of the separated converter type, refer to the FR-F802 (Separated Converter Type) Instruction Manual (Hardware) [IB-0600550ENG].

2.1 Peripheral devices 18
2.2 Removal and reinstallation of the operation panel or the front covers 22
2.3 Installation of the inverter and enclosure design 26
2.4 Terminal connection diagrams 33
2.5 Main circuit terminals 37
2.6 Control circuit 46
2.7 Communication connectors and terminals 60
2.8 Connection of stand-alone option units 63

2.1 Peripheral devices

2.1.1 Inverter and peripheral devices

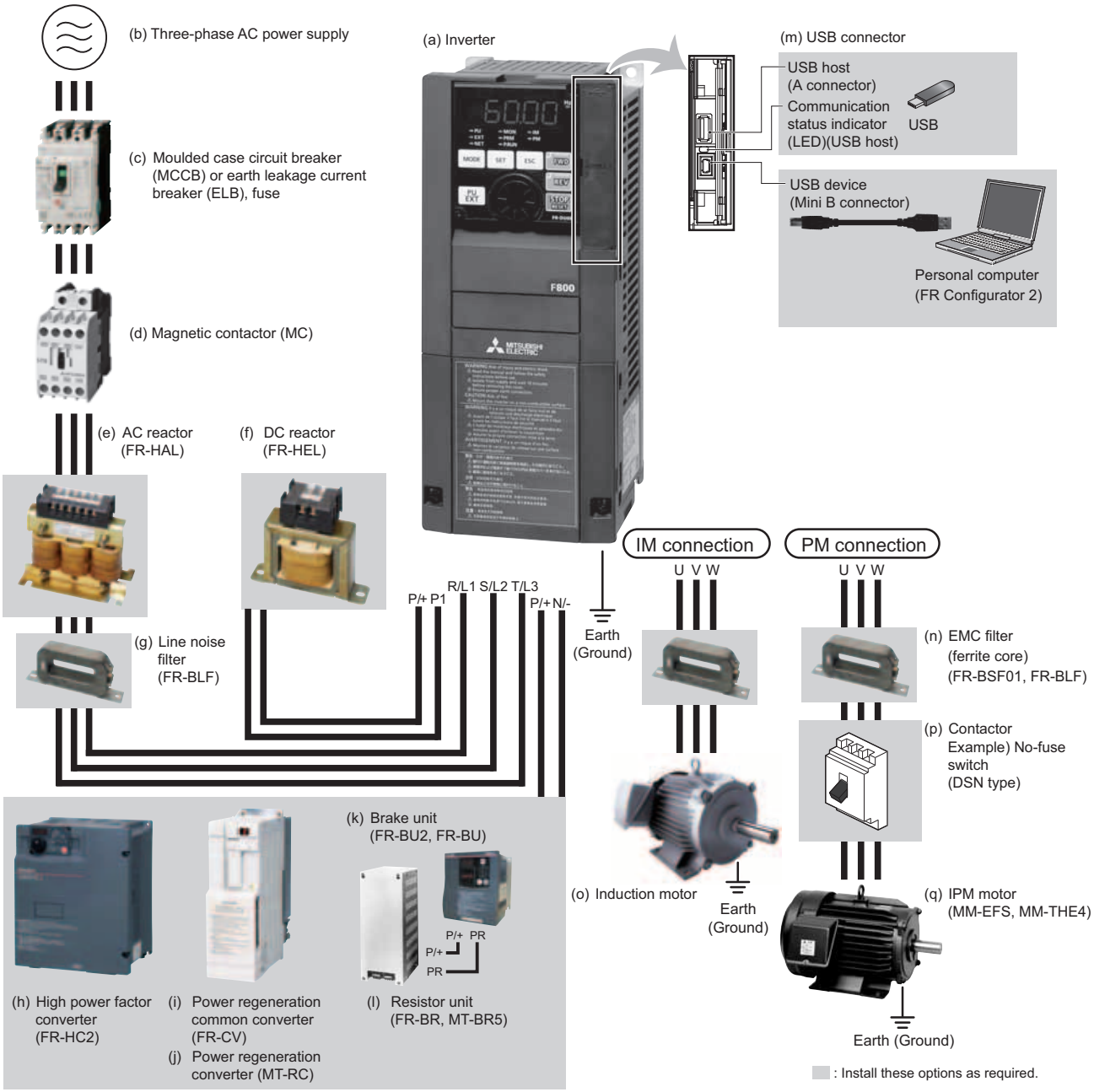

NOTE

- To prevent an electric shock, always earth (ground) the motor and inverter.
- Do not install a power factor correction capacitor or surge suppressor or capacitor type filter on the inverter's output side. Doing so will cause the inverter to trip or the capacitor and surge suppressor to be damaged. If any of the above devices is connected, immediately remove it. When installing a molded case circuit breaker on the output side of the inverter, contact the manufacturer of the molded case circuit breaker.
- Electromagnetic wave interference
  The input/output (main circuit) of the inverter includes high frequency components, which may interfere with the communication devices (such as AM radios) used near the inverter. In this case, activating the EMC filter may minimize interference. (Refer to page 76.)
- For details of options and peripheral devices, refer to the respective Instruction Manual.
- A PM motor cannot be driven by the commercial power supply.
- A PM motor is a motor with permanent magnets embedded inside. High voltage is generated at the motor terminals while the motor is running. Before closing the contactor at the output side, make sure that the inverter power is ON and the motor is stopped.

Symbol	Name	Overview	Refer to page
(a)	Inverter (FR-F800)	The life of the inverter is influenced by the surrounding air temperature. The surrounding air temperature should be as low as possible within the permissible range. This must be noted especially when the inverter is installed in an enclosure. Incorrect wiring may lead to damage of the inverter. The control signal lines must be kept fully away from the main circuit lines to protect them from noise. The built-in EMC filter can reduce the noise.	26 33 76
(b)	Three-phase AC power supply	Must be within the permissible power supply specifications of the inverter.	578
(c)	Molded case circuit breaker (MCCB), earth leakage circuit breaker (ELB), or fuse	Must be selected carefully since an inrush current flows in the inverter at power ON.	20
(d)	Magnetic contactor (MC)	Install this to ensure safety. Do not use this to start and stop the inverter. Doing so will shorten the life of the inverter.	81
(e)	AC reactor (FR-HAL)	Install this to suppress harmonics and to improve the power factor. An AC reactor (FR-HAL) (option) is required when installing the inverter near a large power supply system (1000 kVA or more). Under such condition, the inverter may be damaged if you do not use a reactor. Select a reactor according to the applied motor capacity.	80
(f)	DC reactor (FR-HEL)	Install this to suppress harmonics and to improve the power factor. Select a reactor according to the applicable motor capacity. For the FR-F820-03160(75K) or higher and the FR-F840-01800(75K) or higher, always connect the FR-HEL. When using the DC reactor with the FR-F820-02330(55K) or lower, FR-F840-01160(55K) or lower, remove the jumper across terminals P/+ and P1 before connecting the DC reactor to the inverter.	80
(g)	Noise filter (FR-BLF)	The FR-F820-02330(55K) or lower, FR-F840-01160(55K) or lower are equipped with the common mode choke.	74
(h)	High power factor converter (FR-HC2)	Suppresses the power supply harmonics significantly. Install this as required.	66
(i)	Power regeneration common converter (FR-CV*1)	Provides a large braking capability. Install this as required.	67
(j)	Power regeneration converter (MT-RC*2)		68
(k)	Brake unit (FR-BU2, FR-BU*1)	Allows the inverter to provide the optimal regenerative braking capability. Install this as required.	63
(l)	Resistor unit (FR-BR*1, MT-BR5*2)		
(m)	USB connection	A USB (Ver. 1.1) cable connects the inverter with a personal computer. A USB memory device enables parameter copies and the trace function.	61
(n)	Noise filter (FR-BSF01, FR-BLF)	Install this to reduce the electromagnetic noise generated from the inverter. The noise filter is effective in the range from about 0.5 MHz to 5 MHz. A wire should be wound four turns at maximum.	74
(o)	Induction motor	Connect a squirrel-cage induction motor.	—
(p)	Contactor Example) No-fuse switch (DSN type)	Connect this for an application where a PM motor is driven by the load even while the inverter power is OFF. Do not open or close the contactor while the inverter is running (outputting).	—
(q)	IPM motor (MM-EFS, MM-THE4)	Use the specified motor. An IPM motor cannot be driven by the commercial power supply.	580

*1 Compatible with the FR-F820-02330(55K) or lower and FR-F840-01160(55K) or lower.
*2 Compatible with the FR-F820-03160(75K) or higher and FR-F840-01800(75K) or higher.

2.1.2 Peripheral devices

Check the model of the inverter you purchased. Appropriate peripheral devices must be selected according to the capacity. Refer to the table below to prepare appropriate peripheral devices.

• 200 V class

Motor output (kW) *1	Applicable inverter model	Molded case circuit breaker (MCCB) *2 or earth leakage circuit breaker (ELB) (NF, NV type)		Input-side magnetic contactor *3	
		Power factor improving (AC or DC) reactor		Power factor improving (AC or DC) reactor	
		Without	With	Without	With
0.75	FR-F820-00046(0.75K)	10A	10A	S-T10	S-T10
1.5	FR-F820-00077(1.5K)	15A	15A	S-T10	S-T10
2.2	FR-F820-00105(2.2K)	20A	15A	S-T10	S-T10
3.7	FR-F820-00167(3.7K)	30A	30A	S-T21	S-T10
5.5	FR-F820-00250(5.5K)	50A	40A	S-N25	S-T21
7.5	FR-F820-00340(7.5K)	60A	50A	S-N25	S-N25
11	FR-F820-00490(11K)	75A	75A	S-N35	S-N35
15	FR-F820-00630(15K)	125A	100A	S-N50	S-N50
18.5	FR-F820-00770(18.5K)	150A	125A	S-N65	S-N50
22	FR-F820-00930(22K)	175A	150A	S-N80	S-N65
30	FR-F820-01250(30K)	225A	175A	S-N95	S-N80
37	FR-F820-01540(37K)	250A	225A	S-N150	S-N125
45	FR-F820-01870(45K)	300A	300A	S-N180	S-N150
55	FR-F820-02330(55K)	400A	350A	S-N220	S-N180
75	FR-F820-03160(75K)	—	400A	—	S-N300
90	FR-F820-03800(90K)	—	400A	—	S-N300
110	FR-F820-04750(110K)	—	500A	—	S-N400

*1 Assumes the use of an IPM motor MM-EFS/MM-THE4 or a Mitsubishi 4-pole standard motor with the power supply voltage of 200 VAC 50 Hz.

*2 Select an MCCB according to the power supply capacity.
Install one MCCB per inverter.
For the use in the United States or Canada, provide the appropriate UL and cUL listed fuse or UL489 molded case circuit breaker (MCCB) that is suitable for branch circuit protection. **(Refer to the Instruction Manual (Startup).)**

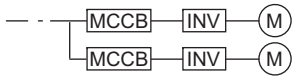

*3 The magnetic contactor is selected based on the AC-1 class. The electrical durability of magnetic contactor is 500,000 times. When the magnetic
contactor is used for emergency stops during motor driving, the electrical durability is 25 times.
If using an MC for emergency stop during motor driving, select an MC regarding the inverter input side current as JEM1038-AC-3 class rated current. When using an MC on the inverter output side for commercial-power supply operation switching using a general-purpose motor, select an MC regarding the rated motor current as JEM1038-AC-3 class rated current.

NOTE

- When the inverter capacity is larger than the motor capacity, select an MCCB and a magnetic contactor according to the inverter model, and select cables and reactors according to the motor output.
- When the breaker on the inverter's input side trips, check for the wiring fault (short circuit), damage to internal parts of the inverter etc. The cause of the trip must be identified and removed before turning ON the power of the breaker.

• 400 V class

Motor output (kW) *1	Applicable inverter model	Molded case circuit breaker (MCCB) *2 or earth leakage circuit breaker (ELB) (NF, NV type)		Input-side magnetic contactor *3	
		Power factor improving (AC or DC) reactor		Power factor improving (AC or DC) reactor	
		Without	With	Without	With
0.75	FR-F840-00023(0.75K)	5A	5A	S-T10	S-T10
1.5	FR-F840-00038(1.5K)	10A	10A	S-T10	S-T10
2.2	FR-F840-00052(2.2K)	10A	10A	S-T10	S-T10
3.7	FR-F840-00083(3.7K)	20A	15A	S-T10	S-T10
5.5	FR-F840-00126(5.5K)	30A	20A	S-T21	S-T12
7.5	FR-F840-00170(7.5K)	30A	30A	S-T21	S-T21
11	FR-F840-00250(11K)	50A	40A	S-T21	S-T21
15	FR-F840-00310(15K)	60A	50A	S-N25	S-T21
18.5	FR-F840-00380(18.5K)	75A	60A	S-N25	S-N25
22	FR-F840-00470(22K)	100A	75A	S-N35	S-N25
30	FR-F840-00620(30K)	125A	100A	S-N50	S-N50
37	FR-F840-00770(37K)	150A	125A	S-N65	S-N50
45	FR-F840-00930(45K)	175A	150A	S-N80	S-N65
55	FR-F840-01160(55K)	200A	175A	S-N80	S-N80
75	FR-F840-01800(75K)	—	225A	—	S-N95
90	FR-F840-02160(90K)	—	225A	—	S-N150
110	FR-F840-02600(110K)	—	225A	—	S-N180
132	FR-F840-03250(132K)	—	400A	—	S-N220
150	FR-F840-03610(160K)	—	400A	—	S-N300
160	FR-F840-03610(160K)	—	400A	—	S-N300
185	FR-F840-04320(185K)	—	400A	—	S-N300
220	FR-F840-04810(220K)	—	500A	—	S-N400
250	FR-F840-05470(250K)	—	600A	—	S-N600
280	FR-F840-06100(280K)	—	600A	—	S-N600
315	FR-F840-06830(315K)	—	700A	—	S-N600

*1 Assumes the use of an IPM motor MM-EFS/MM-THE4 or a Mitsubishi 4-pole standard motor with the power supply voltage of 400 VAC 50 Hz.

*2 Select an MCCB according to the power supply capacity.
Install one MCCB per inverter.
For the use in the United States or Canada, provide the appropriate UL and cUL listed fuse or UL489 molded case circuit breaker (MCCB) that is suitable for branch circuit protection. **(Refer to the Instruction Manual (Startup).)**

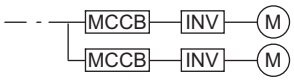

*3 Magnetic contactor is selected based on the AC-1 class. The electrical durability of magnetic contactor is 500,000 times. When the magnetic contactor is used for emergency stops during motor driving, the electrical durability is 25 times.
If using an MC for emergency stop during motor driving, select an MC regarding the inverter input side current as JEM1038-AC-3 class rated current. When using an MC on the inverter output side for commercial-power supply operation switching using a general-purpose motor, select an MC regarding the rated motor current as JEM1038-AC-3 class rated current.

NOTE

- When the inverter capacity is larger than the motor capacity, select an MCCB and a magnetic contactor according to the inverter model, and select cables and reactors according to the motor output.
- When the breaker on the inverter's input side trips, check for the wiring fault (short circuit), damage to internal parts of the inverter etc. The cause of the trip must be identified and removed before turning ON the power of the breaker.

2.2 Removal and reinstallation of the operation panel or the front covers

◆Removal and reinstallation of the operation panel

- Loosen the two screws on the operation panel. (These screws cannot be removed.)

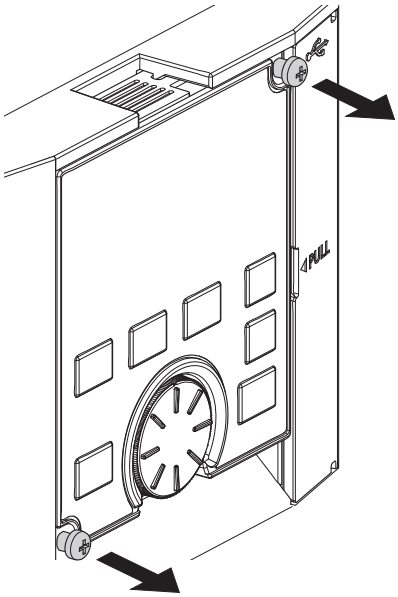

- Press the upper edge of the operation panel while pulling out the operation panel.

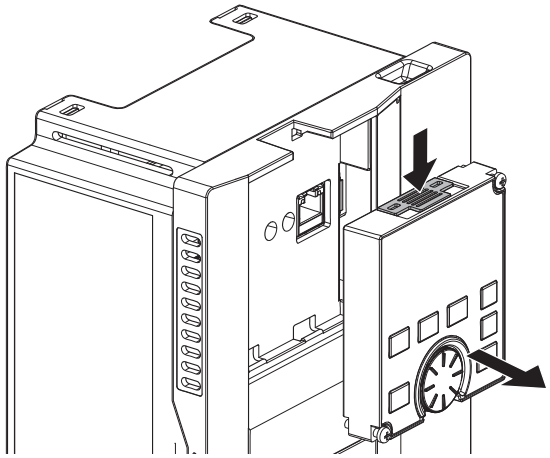

To reinstall the operation panel, align its connector on the back with the PU connector of the inverter, and insert the operation panel. After confirming that the operation panel is fit securely, tighten the screws. (Tightening torque: 0.40 to 0.45 N·m)

◆Removal of the front cover (lower side) (FR-F820-01540(37K) or lower, FR-F840-00770(37K) or lower)

(a)

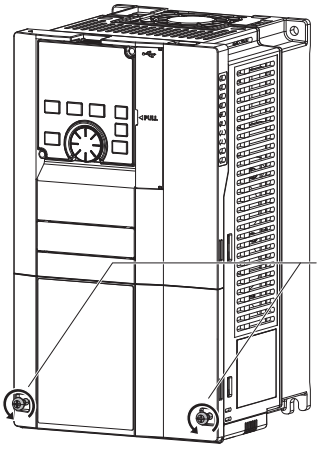

(b)

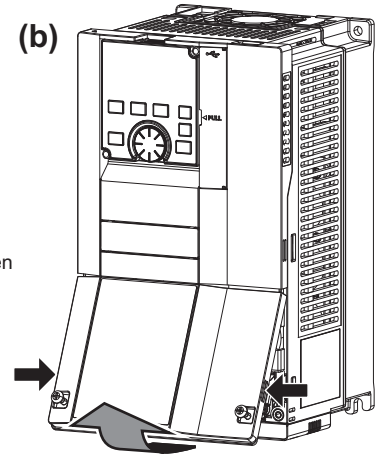

(c)

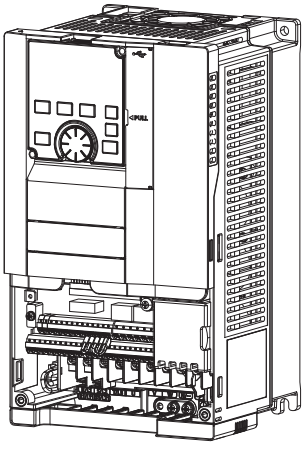

(a) Loosen the screws on the front cover (lower side). (These screws cannot be removed.)
(b) While holding the areas around the installation hooks on the sides of the front cover (lower side), pull out the terminal block cover using its upper side as a support.
(c) With the front cover (lower side) removed, wiring of the main circuit terminals and control circuit terminals can be performed.

◆Removal of the front cover (upper side) (FR-F820-01540(37K) or lower, FR-F840-00770(37K) or lower)

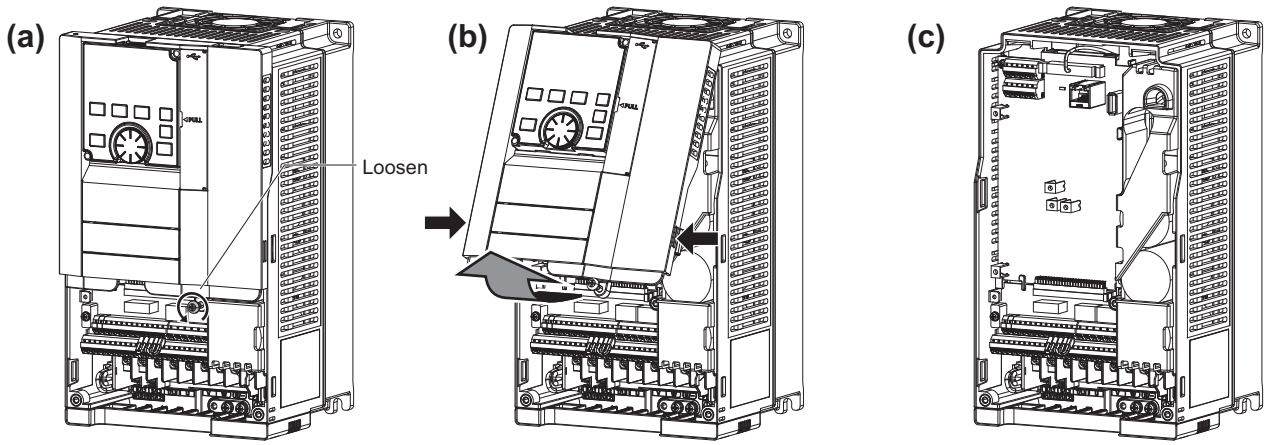

(a) With the front cover (lower side) removed, loosen the mounting screw(s) on the front cover (upper side). (The screw(s) cannot be removed.)
(FR-F820-00340(7.5K) to FR-F820-01540(37K) and FR-F840-00170(7.5K) to FR-F840-00770(37K) have two mounting screws.)

(b) While holding the areas around the installation hooks on the sides of the front cover (upper side), pull out the cover using its upper side as a support.

(c) With the front cover (upper side) removed, wiring of the RS-485 terminals and installation of the plug-in option can be performed.

◆Reinstallation of the front covers (FR-F820-01540(37K) or lower, FR-F840-00770(37K) or lower)

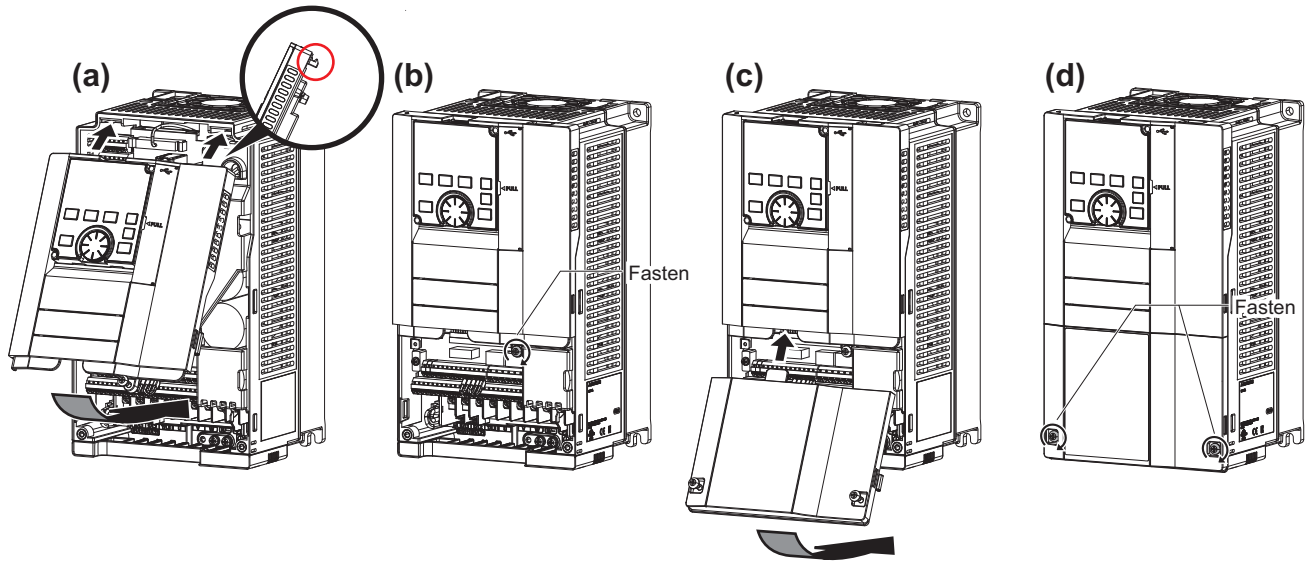

(a) Insert the upper hooks of the front cover (upper side) into the sockets of the inverter.
Securely install the front cover (upper side) to the inverter by fixing the hooks on the sides of the cover into place.

(b) Tighten the mounting screw(s) at the lower part of the front cover (upper side).
(FR-F820-00340(7.5K) to FR-F820-01540(37K) and FR-F840-00170(7.5K) to FR-F840-00770(37K) have two mounting screws.)

(c) Install the terminal block cover by inserting the upper hook into the socket of the front cover (lower side).

(d) Tighten the mounting screws at the lower part of the front cover (lower side).

NOTE

- When installing the front cover (upper side), fit the connector of the operation panel securely along the guides of the PU connector.

◆Removal of the front cover (lower side) (FR-F820-01870(45K) or higher, FR-F840-00930(45K) or higher)

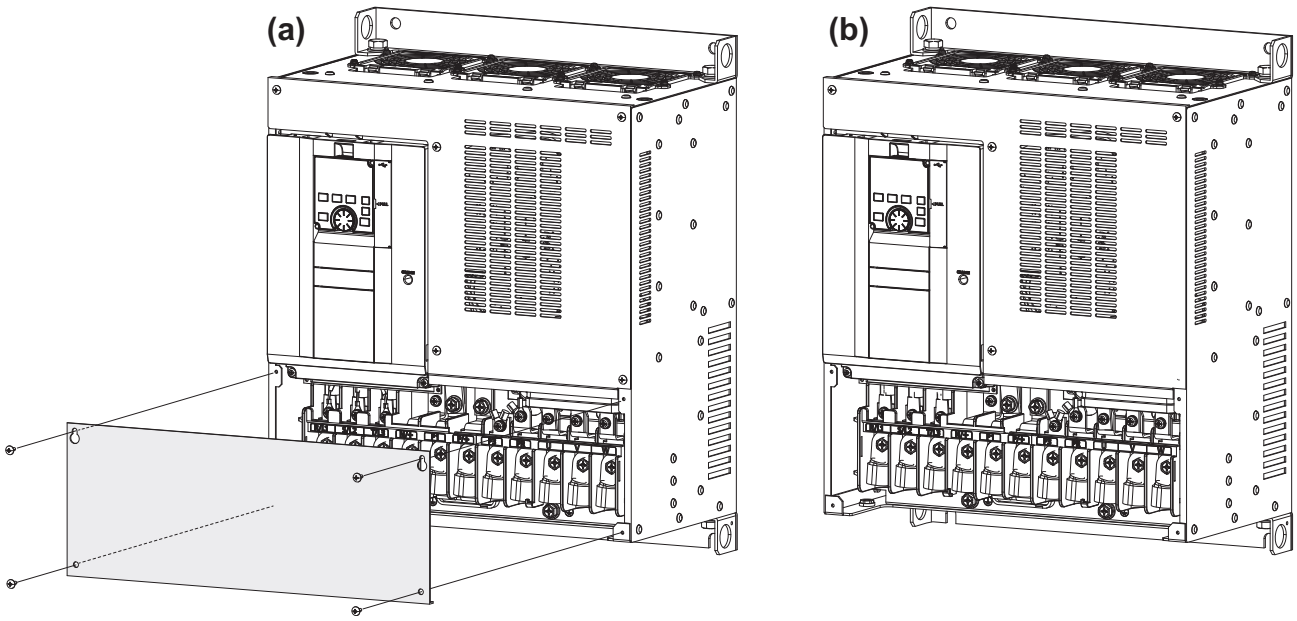

(a) When the mounting screws are removed, the front cover (lower side) can be removed.
(b) With the front cover (lower side) removed, wiring of the main circuit terminals can be performed.

◆Removal of the front cover (upper side) (FR-F820-01870(45K) or higher, FR-F840-00930(45K) or higher)

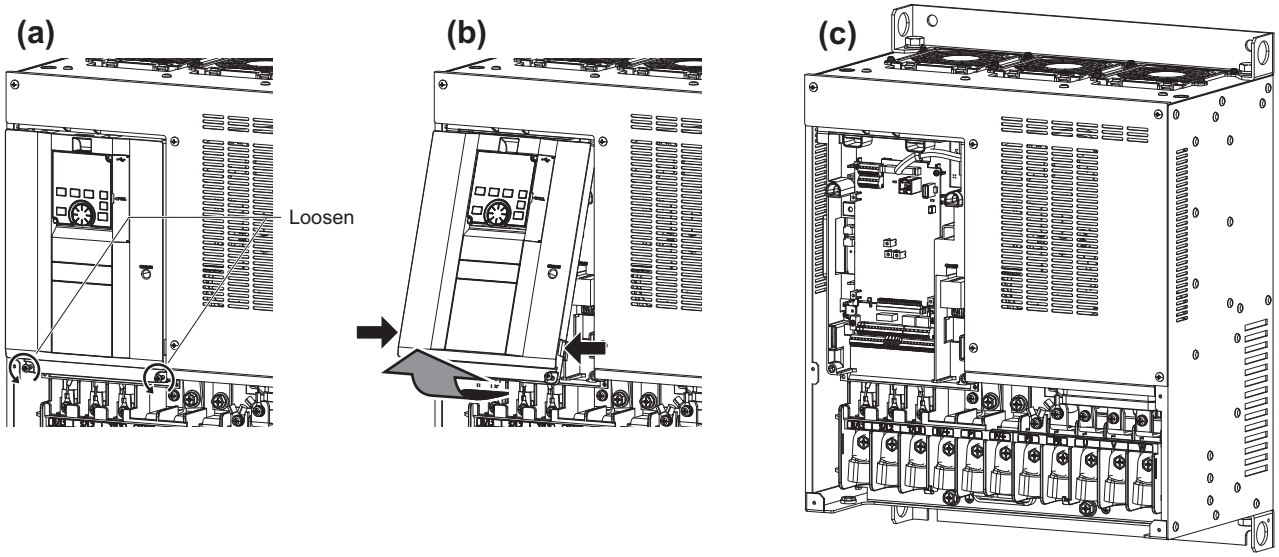

(a) With the front cover (lower side) removed, loosen the mounting screws on the front cover (upper side). (These screws cannot be removed.)
(b) Holding the areas around the installation hooks on the sides of the front cover (upper side), pull out the cover using its upper side as a support.
(c) With the front cover (upper side) removed, wiring of the RS-485 terminals and installation of the plug-in option can be performed.

◆Reinstallation of the front covers (FR-F820-01870(45K) or higher, FR-F840-00930(45K) or higher)

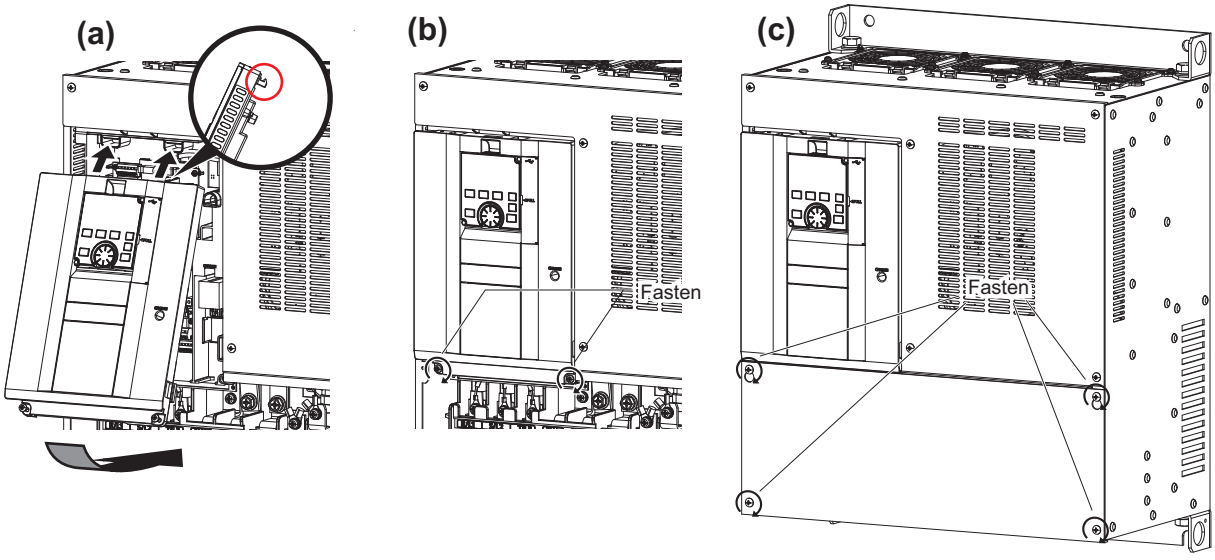

(a) Insert the upper hooks of the front cover (upper side) into the sockets of the inverter.
Securely install the front cover (upper side) to the inverter by fixing the hooks on the sides of the cover into place.
(b) Tighten the mounting screw(s) at the lower part of the front cover (upper side).
(c) Fasten the front cover (lower side) with the mounting screws.

NOTE

- Fully make sure that the front covers are installed securely. Always tighten the mounting screws of the front covers.

2.3 Installation of the inverter and enclosure design

When designing or manufacturing an inverter enclosure, determine the structure, size, and device layout of the enclosure by fully considering the conditions such as heat generation of the contained devices and the operating environment. An inverter unit uses many semiconductor devices. To ensure higher reliability and long period of operation, operate the inverter in the ambient environment that completely satisfies the equipment specifications.

2.3.1 Inverter installation environment

The following table lists the standard specifications of the inverter installation environment. Using the inverter in an environment that does not satisfy the conditions deteriorates the performance, shortens the life, and causes a failure. Refer to the following points, and take adequate measures.

◆Standard environmental specifications of the inverter

Item		Description	
Surrounding air temperature	LD	-10 to +50°C (non-freezing)	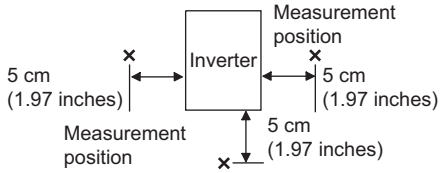
	SLD	-10 to +40°C (non-freezing)	
Ambient humidity		With circuit board coating (conforming to IEC60721-3-3 3C2/3S2): 95% RH or less (non-condensing), Without circuit board coating: 90% RH or less (non-condensing)	
Storage temperature		-20 to +65°C*1	
Atmosphere		Indoors (free from corrosive gas, flammable gas, oil mist, dust and dirt)	
Altitude		Maximum 1,000 m above sea level.*2	
Vibration		5.9 m/s^2 or less*3 at 10 to 55 Hz (directions of X, Y, Z axes)	

*1 Temperature applicable for a short time, e.g. in transit.

*2 For the installation at an altitude above 1,000 m (3280.80 feet) up to 2,500 m (8202 feet), derate the rated current 3% per 500 m (1640.40 feet).

*3 2.9 m/s^2 or less for the FR-F840-04320(185K) or higher.

◆Temperature

The permissible surrounding air temperature of the inverter is between -10°C and +50°C (-10°C and +40°C at the SLD rating). Always operate the inverter within this temperature range. Operation outside this range will considerably shorten the service lives of the semiconductors, parts, capacitors and others. Take the following measures to keep the surrounding air temperature of the inverter within the specified range.

(a) Measures against high temperature

- Use a forced ventilation system or similar cooling system. (Refer to page 28.)
- Install the enclosure in an air-conditioned electric chamber.
- Block direct sunlight.
- Provide a shield or similar plate to avoid direct exposure to the radiated heat and wind of a heat source.
- Ventilate the area around the enclosure well.

(b) Measures against low temperature

- Provide a space heater in the enclosure.
- Do not power OFF the inverter. (Keep the start signal of the inverter OFF.)

(c) Sudden temperature changes

- Select an installation place where temperature does not change suddenly.
- Avoid installing the inverter near the air outlet of an air conditioner.
- If temperature changes are caused by opening/closing of a door, install the inverter away from the door.

◆Humidity

Operate the inverter within the ambient air humidity of usually 45 to 90% (up to 95% with circuit board coating). Too high humidity will pose problems of reduced insulation and metal corrosion. On the other hand, too low humidity may cause a spatial electrical breakdown.
The insulation distance defined in JEM1103 "Control Equipment Insulator" is humidity of 45 to 85%.
(a) Measures against high humidity

- Make the enclosure enclosed, and provide it with a hygroscopic agent.
- Provide dry air into the enclosure from outside.
- Provide a space heater in the enclosure.

(b) Measures against low humidity
Air with proper humidity can be blown into the enclosure from outside. Also when installing or inspecting the unit, discharge your body (static electricity) beforehand, and keep your body away from the parts and patterns.
(c) Measures against condensation
Condensation may occur if frequent operation stops change the in-enclosure temperature suddenly or if the outside air temperature changes suddenly.
Condensation causes such faults as reduced insulation and corrosion.

- Take the measures against high humidity in (a).
- Do not power OFF the inverter. (Keep the start signal of the inverter OFF.)

◆Dust, dirt, oil mist

Dust and dirt will cause such faults as poor contacts, reduced insulation and cooling effect due to the moisture-absorbed accumulated dust and dirt, and in-enclosure temperature rise due to a clogged filter. In an atmosphere where conductive powder floats, dust and dirt will cause such faults as malfunction, deteriorated insulation and short circuit in a short time. Since oil mist will cause similar conditions, it is necessary to take adequate measures.

Countermeasure

- Place the inverter in a totally enclosed enclosure.
  Take measures if the in-enclosure temperature rises. (Refer to page 28.)
- Purge air.
  Pump clean air from outside to make the in-enclosure air pressure higher than the outside air pressure.

◆Corrosive gas, salt damage

If the inverter is exposed to corrosive gas or to salt near a beach, the printed board patterns and parts will corrode or the relays and switches will result in poor contact.
In such places, take the measures given in the previous paragraph.

◆Explosive, flammable gases

As the inverter is non-explosion proof, it must be contained in an explosion-proof enclosure. In places where explosion may be caused by explosive gas, dust or dirt, an enclosure cannot be used unless it structurally complies with the guidelines and has passed the specified tests. This makes the enclosure itself expensive (including the test charges). The best way is to avoid installation in such places and install the inverter in a non-hazardous place.

◆High altitude

Use the inverter at an altitude of within 1000 m. For the installation at an altitude above 1,000 m (3280.80 feet) up to 2,500 m (8202 feet), derate the rated current 3% per 500 m (1640.40 feet).
If it is used at a higher place, it is likely that thin air will reduce the cooling effect and low air pressure will deteriorate dielectric strength.

◆Vibration, impact

The vibration resistance of the inverter is up to 5.9 m/s^2 (2.9 m/s^2 or less for the FR-F840-04320(185K) or higher) at 10 to 55 Hz frequency and 1 mm amplitude for the directions of X, Y, Z axes. Applying vibration and impacts for a long time may loosen the structures and cause poor contacts of connectors, even if those vibration and impacts are within the specified values. Especially when impacts are applied repeatedly, caution must be taken because such impacts may break the installation feet.

Countermeasure

- Provide the enclosure with rubber vibration isolators.
- Strengthen the structure to prevent the enclosure from resonance.
- Install the enclosure away from the sources of the vibration.

2.3.2 Cooling system types for inverter enclosure

From the enclosure that contains the inverter, the heat of the inverter and other equipment (transformers, lamps, resistors, etc.) and the incoming heat such as direct sunlight must be dissipated to keep the in-enclosure temperature lower than the permissible temperatures of the in-enclosure equipment including the inverter.

The cooling systems are classified as follows in terms of the cooling calculation method.

(a) Cooling by natural heat dissipation from the enclosure surface (totally enclosed type)

(b) Cooling by heatsink (aluminum fin, etc.)

(c) Cooling by ventilation (forced ventilation type, pipe ventilation type)

(d) Cooling by heat exchanger or cooler (heat pipe, cooler, etc.)

Cooling system		Enclosure structure	Comment
Natural cooling	Natural ventilation (enclosed, open type)	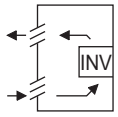	This system is low in cost and generally used, but the enclosure size increases as the inverter capacity increases. This system is for relatively small capacities.
	Natural ventilation (totally enclosed type)	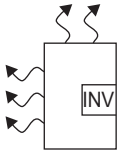	Being a totally enclosed type, this system is the most appropriate for hostile environment having dust, dirt, oil mist, etc. The enclosure size increases depending on the inverter capacity.
Forced cooling	Heatsink cooling	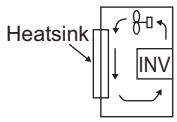	This system has restrictions on the heatsink mounting position and area. This system is for relatively small capacities.
	Forced ventilation	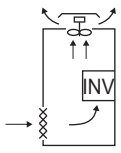	This system is for general indoor installation. This is appropriate for enclosure downsizing and cost reduction, and often used.
	Heat pipe	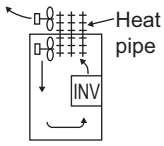	This is a totally enclosed for enclosure downsizing.

2.3.3 Inverter installation

◆Inverter placement

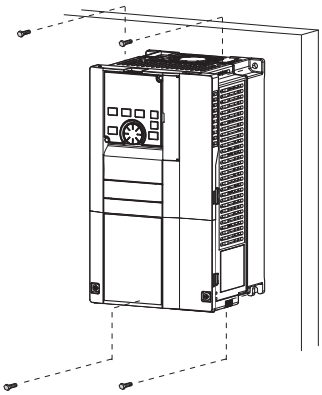

Fix six positions for the FR-F840-04320(185K) or higher.

- Install the inverter on a strong surface securely with screws.
- Leave enough clearances and take cooling measures.
- Avoid places where the inverter is subjected to direct sunlight, high temperature and high humidity.
- Install the inverter on a nonflammable wall surface.
- When encasing multiple inverters, install them in parallel as a cooling measure.
- For heat dissipation and maintenance, keep clearance between the inverter and the other devices or enclosure surface. The clearance below the inverter is required as a wiring space, and the clearance above the inverter is required as a heat dissipation space.

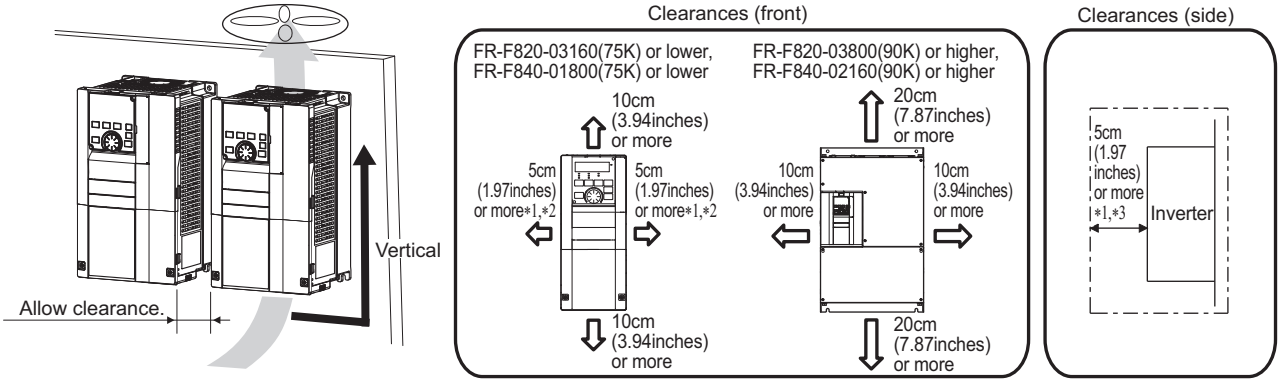

*1 For the FR-F820-00250(5.5K) or lower and FR-F840-00126(5.5K) or lower, allow 1 cm (0.39 inches) or more clearance.

*2 When using the FR-F820-01250(30K) or lower and FR-F840-00620(30K) or lower at the surrounding air temperature of 40°C (104°F) or less (30°C (86°F) or less for the SLD rated inverter), side-by-side installation (0 cm clearance) is available.

*3 For replacing the cooling fan of the FR-F840-04320(185K) or higher, 30 cm (11.81 inches) of space is necessary in front of the inverter. Refer to page 567 for fan replacement.

◆ Installation orientation of the inverter

Install the inverter on a wall as specified. Do not mount it horizontally or in any other way.

◆Above the inverter

Heat is blown up from inside the inverter by the small fan built in the unit. Any equipment placed above the inverter should be heat resistant.

◆Arrangement of multiple inverters

When multiple inverters are placed in the same enclosure, generally arrange them horizontally as shown in the right figure (a). When it is inevitable to arrange them vertically to minimize space, take such measures as to provide guides since heat from the bottom inverters can increase the temperatures in the top inverters, causing inverter failures.

When mounting multiple inverters, fully take caution not to make the surrounding air temperature of the inverter higher than the permissible value by providing ventilation and increasing the enclosure size.

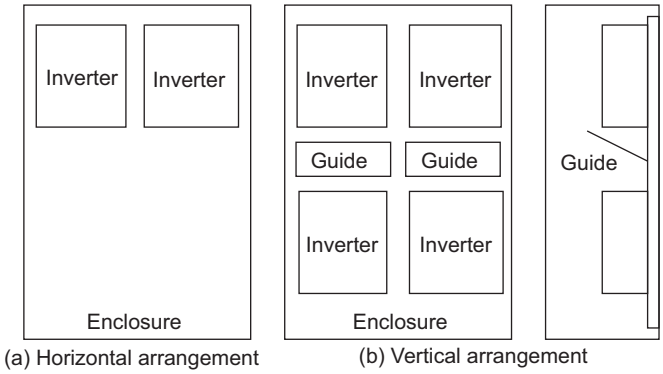

(a) Horizontal arrangement (b) Vertical arrangement

Arrangement of multiple inverters

◆Arrangement of the ventilation fan and inverter

Heat generated in the inverter is blown up from the bottom of the unit as warm air by the cooling fan. When installing a ventilation fan for that heat, determine the place of ventilation fan installation after fully considering an air flow. (Air passes through areas of low resistance. Make an airway and airflow plates to expose the inverter to cool air.)

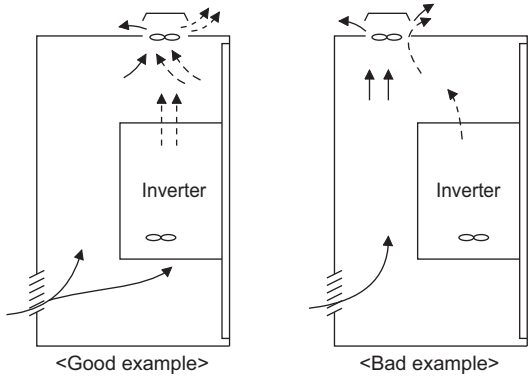

<Good example> <Bad example>

Arrangement of the ventilation fan and inverter

2.3.4 Heatsink protrusion attachment procedure

When encasing FR-F840-04320(185K) or higher to an enclosure, the heat generated in the enclosure can be greatly reduced by protruding the heatsink of the inverter.
When installing the inverter in a compact enclosure, etc., this installation method is recommended.

◆Panel cutting

Cut the panel of the enclosure according to the inverter capacity.

FR-F840-04320(185K)
FR-F840-04810(220K)

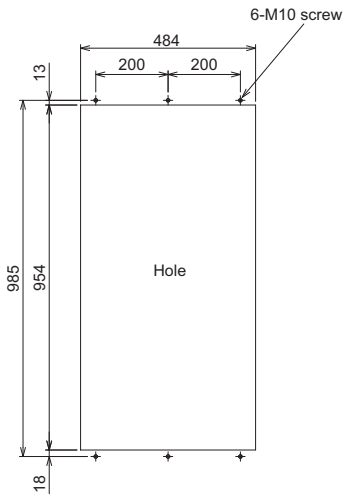

Unit: mm

FR-F840-05470(250K)
FR-F840-06100(280K)
FR-F840-06830(315K)

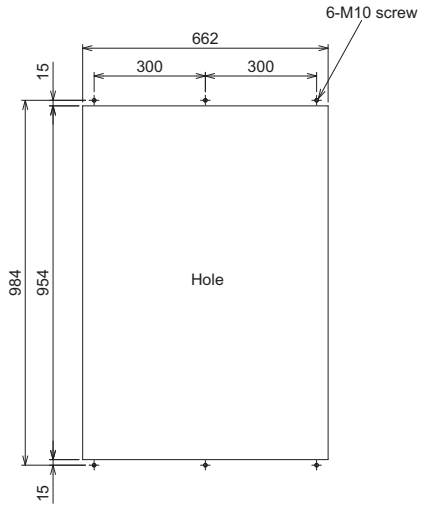

Unit: mm

2

◆Shift and removal of a rear side installation frame

One installation frame is attached to each of the upper and lower parts of the inverter. Change the position of the rear side installation frame on the upper and lower sides of the inverter to the front side as shown on the right. When changing the installation frames, make sure that the installation orientation is correct.

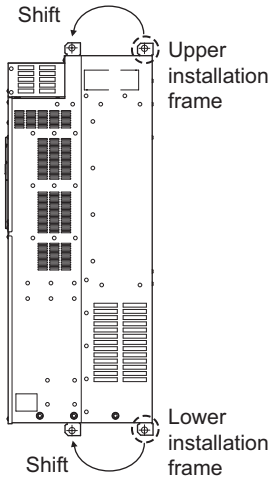

◆Installation of the inverter

Push the inverter heatsink portion outside the enclosure and fix the enclosure and inverter with upper and lower installation frame.

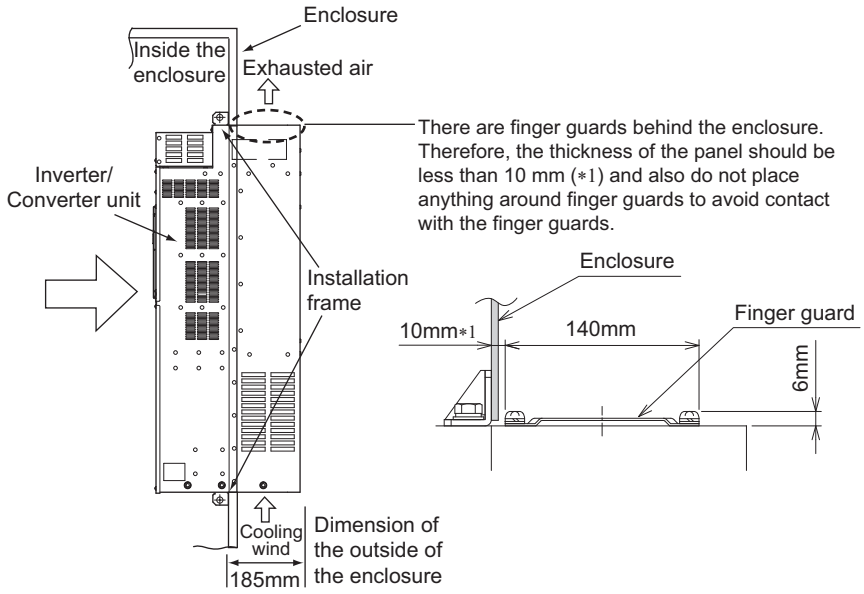

NOTE

- Having a cooling fan, the cooling section which comes out of the enclosure cannot be used in the environment of water drops, oil, mist, dust, etc.
- Be careful not to drop screws, dust etc. into the inverter and cooling fan section.

2.4 Terminal connection diagrams

◆FM type

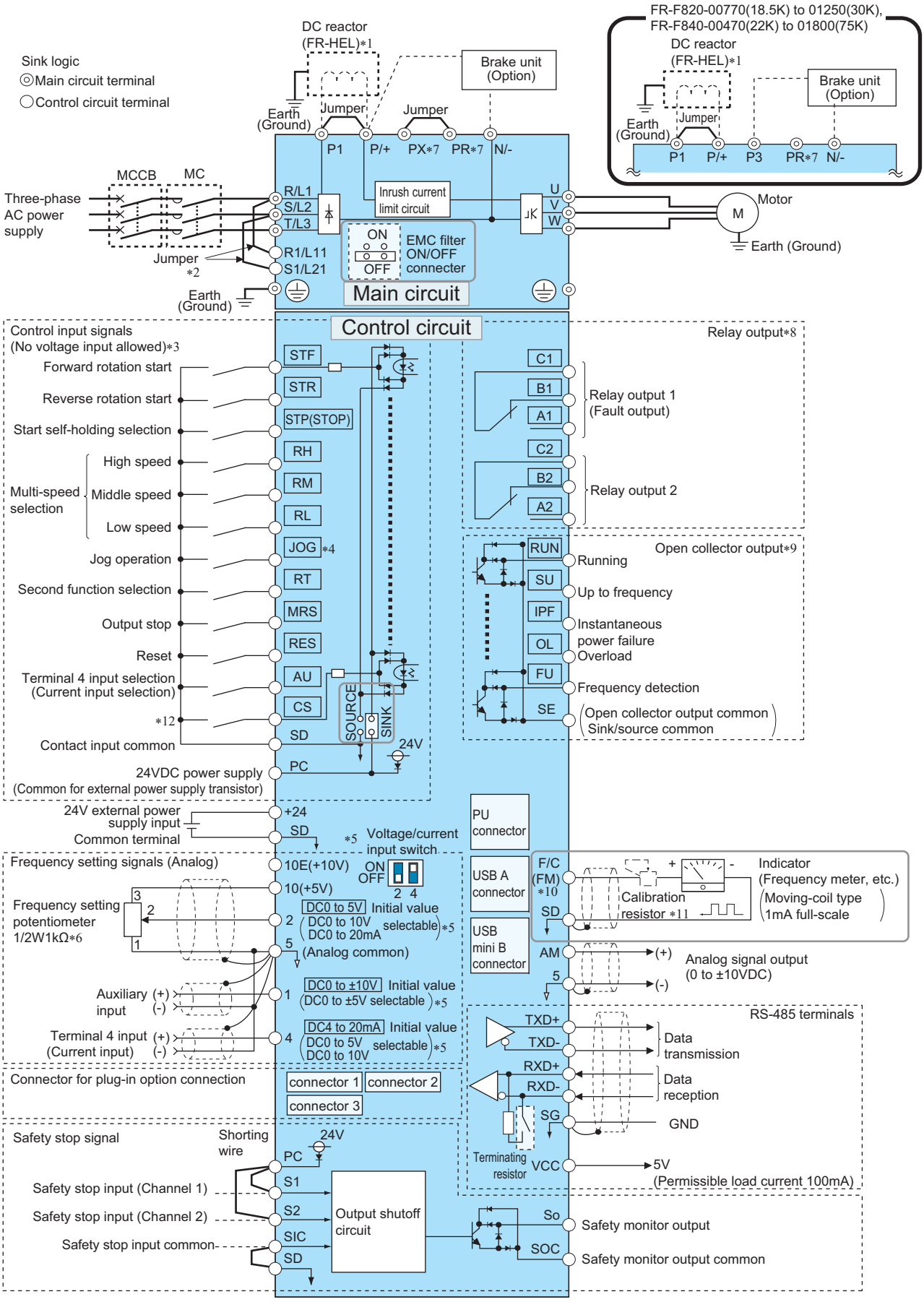

∗1 For the FR-F820-03160(75K) or higher and the FR-F840-01800(75K) or higher, always connect a DC reactor (FR-HEL), which is available as an option. (To select a DC reactor, refer to **page 578**, and select one according to the applicable motor capacity.)
When a DC reactor is connected to the FR-F820-02330(55K) or lower or the FR-F840-01160(55K) or lower, if a jumper is installed across the terminals P1 and P/+, remove the jumper before installing the DC reactor.

∗2 When using separate power supply for the control circuit, remove the jumper between R1/L11 and S1/L21.

∗3 The function of these terminals can be changed with the input terminal assignment **(Pr.178 to Pr.189)**. (Refer to **page 329**.)

∗4 Terminal JOG is also used as a pulse train input terminal. Use **Pr.291** to choose JOG or pulse.

∗5 Terminal input specifications can be changed by analog input specification switchover **(Pr.73, Pr.267)**. To input a voltage, set the voltage/current input switch OFF. To input a current, set the voltage/current input switch ON. (Refer to **page 306**.)

∗6 It is recommended to use 2 W 1 kΩ when the frequency setting signal is changed frequently.

∗7 Do not use terminals PR and PX. Please do not remove the jumper connected to terminals PR and PX.

∗8 The function of these terminals can be changed with the output terminal assignment **(Pr.195, Pr.196)**. (Refer to **page 288**.)

∗9 The function of these terminals can be changed with the output terminal assignment **(Pr.190 to Pr.194)**. (Refer to **page 288**.)

∗10 The terminal FM can be used to output pulse trains as open collector output by setting **Pr.291**.

∗11 Not required when calibrating the scale with the operation panel.

∗12 No function is assigned in the initial status. Assign the function using **Pr.186 CS terminal function selection**. (Refer to **page 329**.)

NOTE

- To prevent a malfunction due to noise, keep the signal cables 10 cm (3.94 inches) or more away from the power cables. Also, separate the main circuit cables at the input side from the main circuit cables at the output side.
- After wiring, wire offcuts must not be left in the inverter.
  Wire offcuts can cause an alarm, failure or malfunction. Always keep the inverter clean.
  When drilling mounting holes in an enclosure etc., take caution not to allow chips and other foreign matter to enter the inverter.
- Set the voltage/current input switch correctly. Incorrect setting may cause a fault, failure or malfunction.

◆CA type

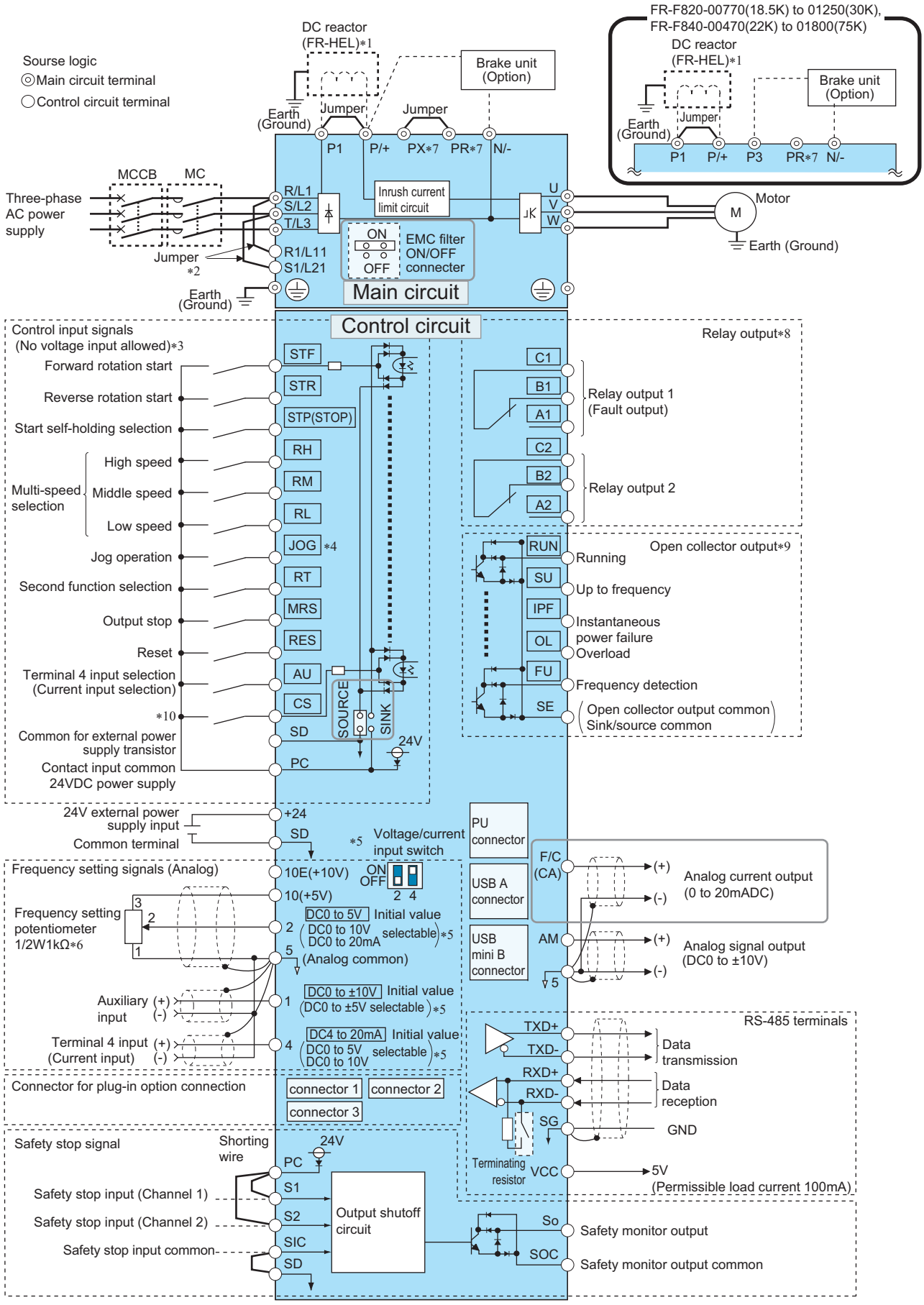
FR-F820-00770(18.5K) to 01250(30K),
FR-F840-00470(22K) to 01800(75K)
DC reactor (FR-HEL)*1
Brake unit (Option)
Jumper
Earth (Ground)
P1
P/+
P3
PR*7
N/-
Sourse logic
Main circuit terminal
Control circuit terminal
PX*7
MCCB
MC
Three-phase AC power supply
R/L1
S/L2
T/L3
R1/L11
S1/L21
Inrush current limit circuit
ON
OFF
EMC filter ON/OFF connecter
U
V
W
Motor
Earth (Ground)
Main circuit
Control circuit
Control input signals (No voltage input allowed)*3
Forward rotation start
Reverse rotation start
Start self-holding selection
Multi-speed selection
High speed
Middle speed
Low speed
Jog operation
Second function selection
Output stop
Reset
Terminal 4 input selection (Current input selection)
*10
Common for external power supply transistor
Contact input common 24VDC power supply
STF
STR
STP(STOP)
RH
RM
RL
JOG
*4
RT
MRS
RES
AU
CS
SD
PC
SOURCE
SINK
24V
Relay output*8
C1
B1
A1
C2
B2
A2
Relay output 1 (Fault output)
Relay output 2
Open collector output*9
RUN
Running
SU
Up to frequency
IPF
Instantaneous power failure
OL
Overload
FU
Frequency detection
SE
Open collector output common
Sink/source common
24V external power supply input
Common terminal
+24
*5
Voltage/current input switch
Frequency setting signals (Analog)
10E(+10V)
10(+5V)
Frequency setting potentiometer 1/2W1kΩ*6
DC0 to 5V Initial value
DC0 to 10V selectable
DC0 to 20mA
(Analog common)
Auxiliary input
DC0 to ±10V Initial value
DC0 to ±5V selectable
Terminal 4 input (Current input)
DC4 to 20mA Initial value
DC0 to 5V selectable
DC0 to 10V
PU connector
USB A connector
USB mini B connector
F/C (CA)
Analog current output (0 to 20mADC)
AM
Analog signal output (DC0 to ±10V)
RS-485 terminals
TXD+
TXD-
RXD+
RXD-
SG
Data transmission
Data reception
GND
Terminating resistor
VCC
5V
(Permissible load current 100mA)
Connector for plug-in option connection
connector 1
connector 2
connector 3
Safety stop signal
Shorting wire
Safety stop input (Channel 1)
Safety stop input (Channel 2)
Safety stop input common
S1
S2
SIC
Output shutoff circuit
So
SOC
Safety monitor output
Safety monitor output common

∗1 For the FR-F820-03160(75K) or higher and the FR-F840-01800(75K) or higher, always connect a DC reactor (FR-HEL), which is available as an option. (To select a DC reactor, refer to **page 578**, and select one according to the applicable motor capacity.)
When a DC reactor is connected to the FR-F820-02330(55K) or lower or the FR-F840-01160(55K) or lower, if a jumper is installed across the terminals P1 and P/+, remove the jumper before installing the DC reactor.

∗2 When using separate power supply for the control circuit, remove the jumper between R1/L11 and S1/L21.

∗3 The function of these terminals can be changed with the input terminal assignment **(Pr.178 to Pr.189)**. (Refer to **page 329**.)

∗4 Terminal JOG is also used as a pulse train input terminal. Use **Pr.291** to choose JOG or pulse.

∗5 Terminal input specifications can be changed by analog input specification switchover **(Pr.73, Pr.267)**. To input a voltage, set the voltage/current input switch OFF. To input a current, set the voltage/current input switch ON. (Refer to **page 306**.)

∗6 It is recommended to use 2 W 1 kΩ when the frequency setting signal is changed frequently.

∗7 Do not use terminals PR and PX. Please do not remove the jumper connected to terminals PR and PX.

∗8 The function of these terminals can be changed with the output terminal assignment **(Pr.195, Pr.196)**. (Refer to **page 288**.)

∗9 The function of these terminals can be changed with the output terminal assignment **(Pr.190 to Pr.194)**. (Refer to **page 288**.)

∗10 No function is assigned in the initial status. Assign the function using **Pr.186 CS terminal function selection**. (Refer to **page 329**.)

NOTE

- To prevent a malfunction due to noise, keep the signal cables 10 cm (3.94 inches) or more away from the power cables. Also, separate the main circuit cables at the input side from the main circuit cables at the output side.
- After wiring, wire offcuts must not be left in the inverter.
  Wire offcuts can cause an alarm, failure or malfunction. Always keep the inverter clean.
  When drilling mounting holes in an enclosure etc., take caution not to allow chips and other foreign matter to enter the inverter.
- Set the voltage/current input switch correctly. Incorrect setting may cause a fault, failure or malfunction.

2.5 Main circuit terminals

2.5.1 Details on the main circuit terminals

Terminal symbol	Terminal name	Terminal function description	Refer to page
R/L1, S/L2, T/L3	AC power input	Connect these terminals to the commercial power supply. Do not connect anything to these terminals when using the high power factor converter (FR-HC2) or the power regeneration common converter (FR-CV).	—
U, V, W	Inverter output	Connect these terminals to a three-phase squirrel cage motor or a PM motor.	—
R1/L11, S1/L21	Power supply for the control circuit	Connected to the AC power supply terminals R/L1 and S/L2. To retain the fault display and fault output, or to use a high power factor converter (FR-HC2) or a power regeneration common converter (FR-CV), remove the jumpers across terminals R/L1 and R1/L11 and across S/L2 and S1/L21, and supply external power to these terminals. The power capacity necessary when separate power is supplied from R1/L11 and S1/L21 differs according to the inverter capacity. FR-F820-00630(15K) or lower, FR-F840-00380(18.5K) or lower 60 VA FR-F820-00770(18.5K) or higher, FR-F840-00470(22K) or higher 80 VA	55
P/+, N/-	Brake unit connection	Connect the brake unit (FR-BU2, FR-BU, BU), power regeneration common converter (FR-CV), power regeneration converter (MT-RC), high power factor converter (FR-HC2), or DC power supply (under DC feeding mode). When connecting multiple inverters, FR-F820-00770(18.5K) to 01250(30K) or FR-F840-00470(22K) to 01800(75K), in parallel using the FR-CV, FR-HC2, or a DC power supply, always use either terminal P/+ or P3 for the connection. (Do not use the terminals P/+ and P3 together.)	63
P3, N/-	Brake unit connection FR-F820-00770(18.5K) to 01250(30K) FR-F840-00470(22K) to 01800(75K)		
P/+, P1	DC reactor connection FR-F820-02330(55K) or lower FR-F840-01160(55K) or lower	Remove the jumper across terminals P/+ and P1, and connect a DC reactor. When a DC reactor is not connected, the jumper across terminals P/+ and P1 should not be removed.	69
	DC reactor connection FR-F820-03160(75K) or higher FR-F840-01800(75K) or higher	Always connect a DC reactor, which is available as an option.	
PX, PR	Do not use terminals PX and PR. The terminal PX is equipped in the FR-F820-00490(11K) or lower and the FR-F840-00250(11K) or lower. The terminal PR is equipped in the FR-F820-01250(30K) or lower and the FR-F840-01800(75K) or lower.		—
⏚	Earth (ground)	For earthing (grounding) the inverter chassis. This must be earthed (grounded).	45

2.5.2 Terminal layout of the main circuit terminals, wiring of power supply and the motor

FR-F820-00046(0.75K), FR-F820-00077(1.5K)

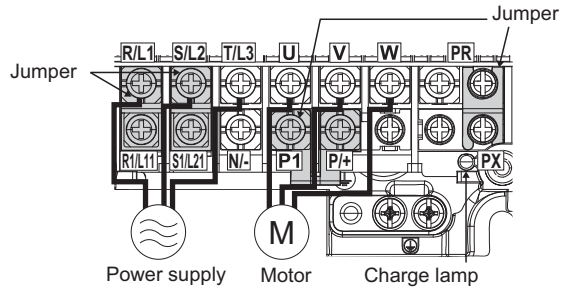

FR-F820-00105(2.2K) to FR-F820-00250(5.5K)
FR-F840-00023(0.75K) to FR-F840-00126(5.5K)

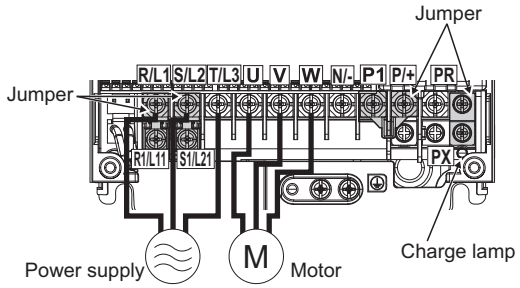

FR-F820-00340(7.5K), FR-F820-00490(11K)
FR-F840-00170(7.5K), FR-F840-00250(11K)

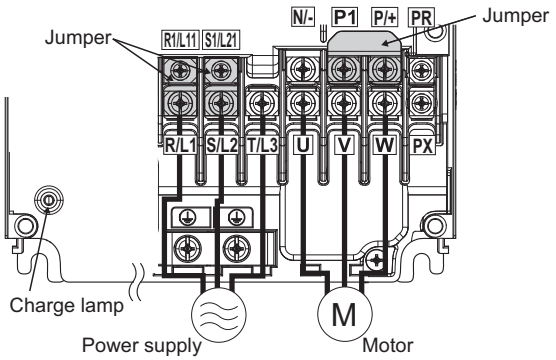

FR-F820-00630(15K)
FR-F840-00310(15K), FR-F840-00380(18.5K)

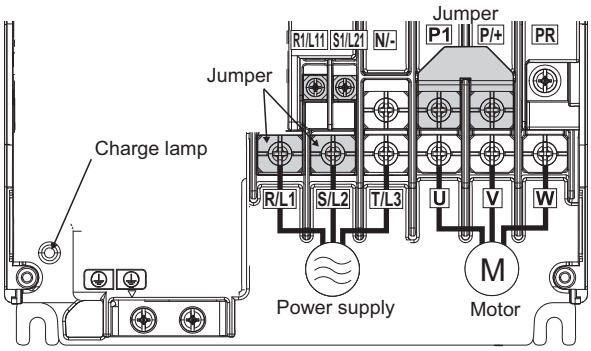

FR-F820-00770(18.5K) to FR-F820-01250(30K)
FR-F840-00470(22K), FR-F840-00620(30K)

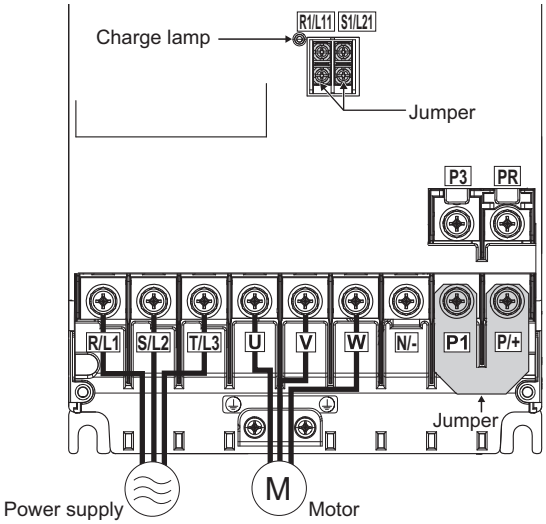

FR-F820-01540(37K)*1
FR-F840-00770(37K)

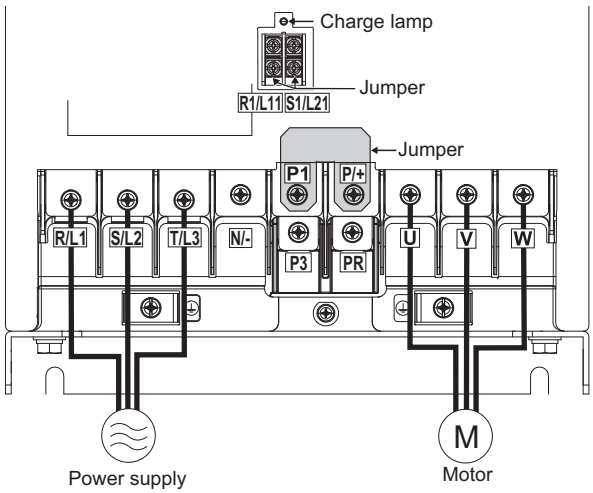

FR-F820-01870(45K), FR-F820-02330(55K)

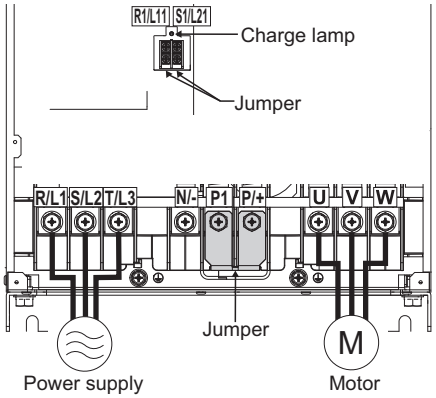

FR-F820-03160(75K)

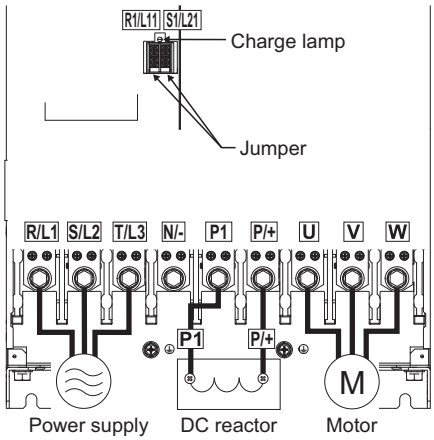

FR-F820-03800(90K), FR-F820-04750(110K)
FR-F840-03250(132K) to FR-F840-04810(220K)

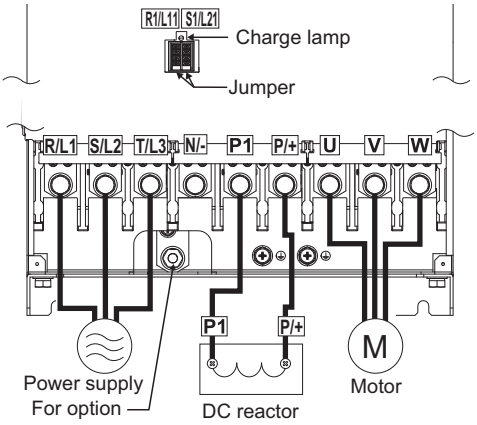

FR-F840-00930(45K) to FR-F840-01800(75K)*2

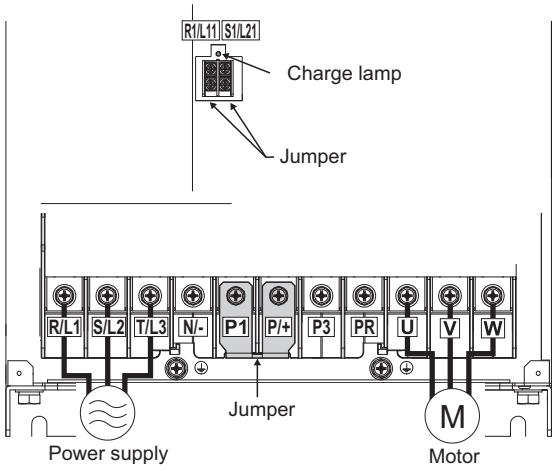

FR-F840-02160(90K), FR-F840-02600(110K)

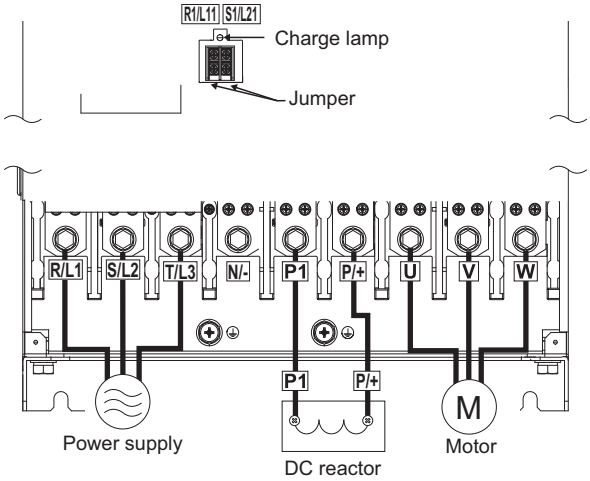

FR-F840-05470(250K) to FR-F840-06830(315K)

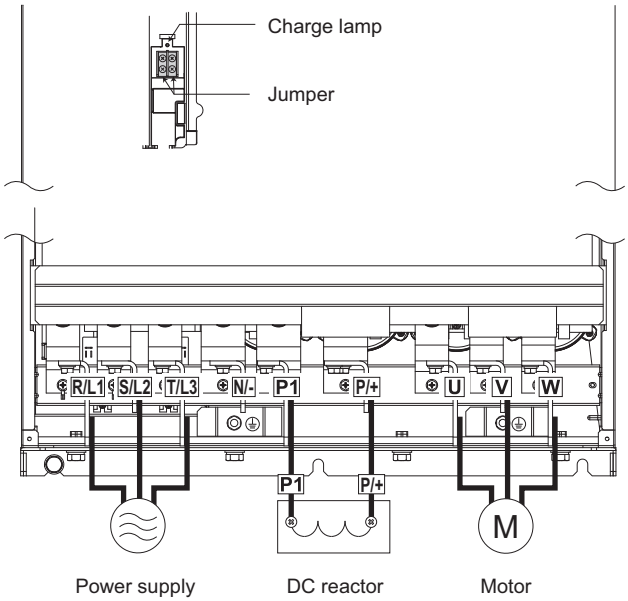

*1 Terminals P3 and PR of the FR-F820-01540(37K) are not provided with a screw. Do not connect anything to this.

*2 For FR-F840-01800(75K), a jumper is not installed across the terminals P1 and P/+. Always connect a DC reactor (FR-HEL), which is available as an option, across the terminals P1 and P/+.

NOTE

- Make sure the power cables are connected to the R/L1, S/L2, and T/L3. (Phase need not be matched.) Never connect the power cable to the U, V, and W of the inverter. Doing so will damage the inverter.
- Connect the motor to U, V, and W. The phase need to be matched.
- When wiring the inverter main circuit conductor of the FR-F840-05470(250K) or higher, tighten a nut from the right side of the conductor. When wiring two wires, place wires on both sides of the conductor. (Refer to the drawing on the right.) For wiring, use bolts (nuts) provided with the inverter.

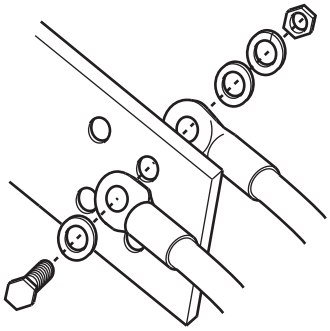

- Handling of the wiring cover
  (FR-F820-00630(15K) to 00930(22K), FR-F840-00310(15K) to 00620(30K))
  For the hook of the wiring cover, cut off the necessary parts using a pair of needle-nose pliers etc.

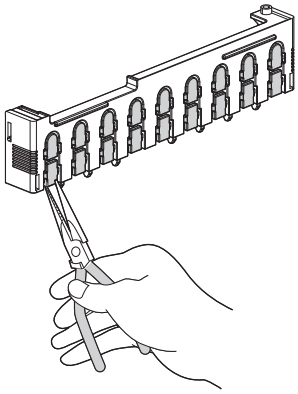

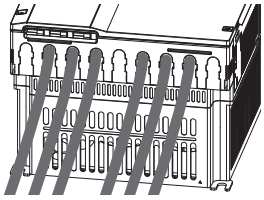

NOTE

- Cut off the same number of lugs as wires. If parts where no wire is put through have been cut off (10 mm or more), protective structure (JEM1030) becomes an open type (IP00).

2.5.3 Applicable cables and the wiring length

Select a recommended cable size to ensure that the voltage drop will be 2% or less.
If the wiring distance is long between the inverter and motor, the voltage drop in the main circuit wires will cause the motor torque to decrease especially at a low speed.
The following table indicates a selection example for the wiring length of 20 m.

◆LD rating (Pr.570 Multiple rating setting = "1")

• 200 V class (220 V input power supply)

Applicable inverter model	Terminal screw Size *4	Tightening torque N•m	Crimping terminal		Cable gauge								
					HIV cables, etc. (mm²) *1				AWG/MCM *2		PVC cables, etc. (mm²) *3		
			R/L1, S/L2, T/L3	U, V, W	R/L1, S/L2, T/L3	U, V, W	P/+, P1	Earthing (grounding) cable	R/L1, S/L2, T/L3	U, V, W	R/L1, S/L2, T/L3	U, V, W	Earthing (grounding) cable
FR-F820-00046(0.75K) to 00105(2.2K)	M4	1.5	2-4	2-4	2	2	2	2	14	14	2.5	2.5	2.5
FR-F820-00167(3.7K)	M4	1.5	5.5-4	5.5-4	3.5	3.5	3.5	3.5	12	12	4	4	4
FR-F820-00250(5.5K)	M4	1.5	5.5-4	5.5-4	5.5	5.5	5.5	5.5	10	10	6	6	6
FR-F820-00340(7.5K)	M5	2.5	14-5	8-5	14	8	14	5.5	6	8	16	10	16
FR-F820-00490(11K)	M5	2.5	14-5	14-5	14	14	14	8	6	6	16	16	16
FR-F820-00630(15K)	M5	2.5	22-5	22-5	22	22	22	14	4	4	25	25	16
FR-F820-00770(18.5K)	M6	4.4	38-6	38-6	38	38	38	14	2	2	35	35	25
FR-F820-00930(22K)	M8 (M6)	7.8	38-8	38-8	38	38	38	22	2	2	35	35	25
FR-F820-01250(30K)	M8 (M6)	7.8	60-8	60-8	60	60	60	22	1/0	1/0	50	50	25
FR-F820-01540(37K)	M8 (M6)	7.8	80-8	80-8	80	80	80	22	3/0	3/0	70	70	35
FR-F820-01870(45K)	M10 (M8)	14.7	100-10	100-10	100	100	100	38	4/0	4/0	95	95	50
FR-F820-02330(55K)	M10 (M8)	14.7	100-10	100-10	100	100	100	38	4/0	4/0	95	95	50
FR-F820-03160(75K)	M12 (M8)	24.5	150-12	150-12	125	125	150	38	250	250	—	—	—
FR-F820-03800(90K)	M12 (M8)	24.5	150-12	150-12	150	150	2×100	38	2×4/0	2×4/0	—	—	—
FR-F820-04750(110K)	M12 (M8)	24.5	100-12	100-12	150	150	2×100	38	2×4/0	2×4/0	—	—	—

• 400 V class (440 V input power supply)

Applicable inverter model	Terminal screw Size *4	Tightening torque N•m	Crimping terminal		Cable gauge								
					HIV cables, etc. (mm²) *1				AWG/MCM *2		PVC cables, etc. (mm²) *3		
			R/L1, S/L2, T/L3	U, V, W	R/L1, S/L2, T/L3	U, V, W	P/+, P1	Earthing (grounding) cable	R/L1, S/L2, T/L3	U, V, W	R/L1, S/L2, T/L3	U, V, W	Earthing (grounding) cable
FR-F840-00023(0.75K) to 00083(3.7K)	M4	1.5	2-4	2-4	2	2	2	2	14	14	2.5	2.5	2.5
FR-F840-00126(5.5K)	M4	1.5	2-4	2-4	2	2	3.5	3.5	12	14	2.5	2.5	4
FR-F840-00170(7.5K)	M4	1.5	5.5-4	5.5-4	3.5	3.5	3.5	3.5	12	12	4	4	4
FR-F840-00250(11K)	M4	1.5	5.5-4	5.5-4	5.5	5.5	5.5	5.5	10	10	6	6	10
FR-F840-00310(15K)	M5	2.5	8-5	8-5	8	8	8	5.5	8	8	10	10	10
FR-F840-00380(18.5K)	M5	2.5	14-5	8-5	14	8	14	8	6	8	16	10	16
FR-F840-00470(22K)	M6	4.4	14-6	14-6	14	14	22	14	6	6	16	16	16
FR-F840-00620(30K)	M6	4.4	22-6	22-6	22	22	22	14	4	4	25	25	16
FR-F840-00770(37K)	M6	4.4	22-6	22-6	22	22	22	14	4	4	25	25	16
FR-F840-00930(45K)	M8	7.8	38-8	38-8	38	38	38	22	1	2	50	50	25
FR-F840-01160(55K)	M8	7.8	60-8	60-8	60	60	60	22	1/0	1/0	50	50	25
FR-F840-01800(75K)	M8	7.8	60-8	60-8	60	60	60	22	1/0	1/0	50	50	25
FR-F840-02160(90K)	M10	14.7	60-10	60-10	60	60	60	22	1/0	1/0	50	50	25
FR-F840-02600(110K)	M10	14.7	80-10	80-10	80	80	80	22	3/0	3/0	70	70	35
FR-F840-03250(132K)	M10 (M12)	14.7	100-10	100-10	100	100	100	38	4/0	4/0	95	95	50
FR-F840-03610(160K)	M10 (M12)	14.7	150-10	150-10	125	125	100	38	250	250	120	120	70
FR-F840-04320(185K)	M12 (M10)	24.5	150-12	150-12	150	150	150	38	300	300	150	150	95
FR-F840-04810(220K)	M12 (M10)	24.5	100-12	100-12	2×100	2×100	2×100	60	2×4/0	2×4/0	2×95	2×95	95
FR-F840-05470(250K)	M12 (M10)	46	100-12	100-12	2×100	2×100	2×100	60	2×4/0	2×4/0	2×95	2×95	95
FR-F840-06100(280K)	M12 (M10)	46	150-12	150-12	2×125	2×125	2×125	60	2×250	2×250	2×120	2×120	120
FR-F840-06830(315K)	M12 (M10)	46	150-12	150-12	2×150	2×150	2×125	60	2×300	2×300	2×150	2×150	150

*1 For FR-F820-02330(55K) or lower and FR-F840-01160(55K) or lower, this cable gauge is with the continuous maximum permissible temperature of 75°C (HIV cable (600 V class 2 vinyl-insulated cable), etc.). Assumes that the surrounding air temperature is 50°C or less and the wiring distance is 20 m or less.
For FR-F820-03160(75K) or higher and FR-F840-01800(75K) or higher, this cable gauge is with the continuous maximum permissible temperature of 90°C or higher (LMFC (heat resistant flexible cross-linked polyethylene insulated cable), etc.). Assumes that the surrounding air temperature is 50°C or less and the wiring is in-enclosure.

*2 For all the 200 V class capacities and FR-F840-00930(45K) or lower, this cable gauge is with the continuous maximum permissible temperature of 75°C (THHW cable). This is assumes a surrounding air temperature of 40°C or less and wiring distance of 20 m or less.
For FR-F840-01160(55K) or higher, this cable gauge is with continuous maximum permissible temperature of 90°C (THHN cable). This assumes a surrounding air temperature of 40°C or lower and in-enclosure wiring. (Selection example for use mainly in the United States.)

*3 For FR-F820-00770(18.5K) or lower and FR-F840-00930(45K) or lower, the cable gauge is with the continuous maximum permissible temperature of 70°C (PVC cable). This assumes a surrounding air temperature of 40°C or less and wiring distance of 20 m or less.
For FR-F820-00930(22K) or higher and FR-F840-01160(55K) or higher, this cable gauge is with continuous maximum permissible temperature of 90°C (XLPE cable). This assumes a surrounding air temperature of 40°C and in-enclosure wiring. (Selection example for use mainly in Europe.)

*4 The terminal screw size indicates the size of the terminal screw for R/L1, S/L2, T/L3, U, V, W, P/+, N/-, P1, P3, and the screw for earthing (grounding).
The screw size for earthing (grounding) of FR-F820-00930(22K) or higher is indicated in parentheses.
The screw size for P/+ terminal for connecting an option to FR-F840-03250(132K) or FR-F840-03610(160K) is indicated in parentheses.
The screw size for earthing (grounding) of FR-F840-04320(185K) or higher is indicated in parenthesis.

◆SLD rating (Pr.570 Multiple rating setting = "0")

• 200 V class (220 V input power supply)

Applicable inverter model	Terminal screw Size *4	Tightening torque N•m	Crimping terminal		Cable gauge								
					HIV cables, etc. (mm²) *1				AWG/MCM *2		PVC cables, etc. (mm²) *3		
			R/L1, S/L2, T/L3	U, V, W	R/L1, S/L2, T/L3	U, V, W	P/+, P1	Earthing (grounding) cable	R/L1, S/L2, T/L3	U, V, W	R/L1, S/L2, T/L3	U, V, W	Earthing (grounding) cable
FR-F820-00046(0.75K) to 00105(2.2K)	M4	1.5	2-4	2-4	2	2	2	2	14	14	2.5	2.5	2.5
FR-F820-00167(3.7K)	M4	1.5	5.5-4	5.5-4	3.5	3.5	3.5	3.5	12	12	4	4	4
FR-F820-00250(5.5K)	M4	1.5	5.5-4	5.5-4	5.5	5.5	5.5	5.5	10	10	6	6	6
FR-F820-00340(7.5K)	M5	2.5	14-5	8-5	14	8	14	5.5	6	8	16	10	16
FR-F820-00490(11K)	M5	2.5	14-5	14-5	14	14	14	8	6	6	16	16	16
FR-F820-00630(15K)	M5	2.5	22-5	22-5	22	22	22	14	4	4	25	25	16
FR-F820-00770(18.5K)	M6	4.4	38-6	38-6	38	38	38	14	2	2	50	50	25
FR-F820-00930(22K)	M8(M6)	7.8	38-8	38-8	38	38	38	22	2	2	50	50	25
FR-F820-01250(30K)	M8(M6)	7.8	60-8	60-8	60	60	60	22	1/0	1/0	50	50	25
FR-F820-01540(37K)	M8(M6)	7.8	80-8	80-8	80	80	80	22	3/0	3/0	70	70	35
FR-F820-01870(45K)	M10(M8)	14.7	100-10	100-10	100	100	100	38	4/0	4/0	95	95	50
FR-F820-02330(55K)	M10(M8)	14.7	100-10	100-10	100	100	100	38	4/0	4/0	95	95	50
FR-F820-03160(75K)	M12(M8)	24.5	150-12	150-12	125	125	150	38	250	250	—	—	—
FR-F820-03800(90K)	M12(M8)	24.5	100-12	100-12	150	150	2×100	38	2×4/0	2×4/0	—	—	—
FR-F820-04750(110K)	M12(M8)	24.5	100-12	100-12	2×100	2×100	2×100	60	2×4/0	2×4/0	—	—	—

• 400 V class (440 V input power supply)

Applicable inverter model	Terminal screw Size *4	Tightening torque N•m	Crimping terminal		Cable gauge								
					HIV cables, etc. (mm²) *1				AWG/MCM *2		PVC cables, etc. (mm²) *3		
			R/L1, S/L2, T/L3	U, V, W	R/L1, S/L2, T/L3	U, V, W	P/+, P1	Earthing (grounding) cable	R/L1, S/L2, T/L3	U, V, W	R/L1, S/L2, T/L3	U, V, W	Earthing (grounding) cable
FR-F840-00023(0.75K) to 00083(3.7K)	M4	1.5	2-4	2-4	2	2	2	2	14	14	2.5	2.5	2.5
FR-F840-00126(5.5K)	M4	1.5	2-4	2-4	2	2	3.5	3.5	12	14	2.5	2.5	4
FR-F840-00170(7.5K)	M4	1.5	5.5-4	5.5-4	3.5	3.5	3.5	3.5	12	12	4	4	4
FR-F840-00250(11K)	M4	1.5	5.5-4	5.5-4	5.5	5.5	5.5	5.5	10	10	6	6	10
FR-F840-00310(15K)	M5	2.5	8-5	8-5	8	8	8	5.5	8	8	10	10	10
FR-F840-00380(18.5K)	M5	2.5	14-5	8-5	14	8	14	8	6	8	16	10	16
FR-F840-00470(22K)	M6	4.4	14-6	14-6	14	14	22	14	6	6	16	16	16
FR-F840-00620(30K)	M6	4.4	22-6	22-6	22	22	22	14	4	4	25	25	16
FR-F840-00770(37K)	M6	4.4	22-6	22-6	22	22	22	14	4	4	25	25	16
FR-F840-00930(45K)	M8	7.8	38-8	38-8	38	38	38	22	1	2	50	50	25
FR-F840-01160(55K)	M8	7.8	60-8	60-8	60	60	60	22	1/0	1/0	50	50	25
FR-F840-01800(75K)	M8	7.8	60-8	60-8	60	60	60	22	1/0	1/0	50	50	25
FR-F840-02160(90K)	M10	14.7	80-10	80-10	80	80	80	22	3/0	3/0	70	70	35
FR-F840-02600(110K)	M10	14.7	100-10	100-10	100	100	100	38	4/0	4/0	95	95	50
FR-F840-03250(132K)	M10(M12)	14.7	150-10	150-10	125	125	100	38	250	250	120	120	70
FR-F840-03610(160K)	M10(M12)	14.7	150-10	150-10	150	150	150	38	300	300	150	150	95
FR-F840-04320(185K)	M12(M10)	24.5	100-12	100-12	2×100	2×100	2×100	60	2×4/0	2×4/0	2×95	2×95	95
FR-F840-04810(220K)	M12(M10)	24.5	100-12	100-12	2×100	2×100	2×100	60	2×4/0	2×4/0	2×95	2×95	95
FR-F840-05470(250K)	M12(M10)	46	150-12	150-12	2×125	2×125	2×125	60	2×250	2×250	2×120	2×120	120
FR-F840-06100(280K)	M12(M10)	46	150-12	150-12	2×150	2×150	2×125	60	2×300	2×300	2×150	2×150	150
FR-F840-06830(315K)	M12(M10)	46	200-12	200-12	2×200	2×200	2×150	100	2×350	2×350	2×185	2×185	2×95

*1 For all the 200 V class capacities and FR-F840-01160(55K) or lower, this cable gauge is with the continuous maximum permissible temperature of 75°C (HIV cable (600 V class 2 vinyl-insulated cable), etc.). Assumes that the surrounding air temperature is 50°C or less and the wiring distance is 20 m or less.
FR-F840-01800(75K) or higher, this cable gauge is with the continuous maximum permissible temperature of 90°C or higher (LMFC (heat resistant flexible cross-linked polyethylene insulated cable), etc.). Assumes that the surrounding air temperature is 50°C or less and the wiring is in-enclosure.

*2 For all the 200 V class capacities and FR-F840-00930(45K) or lower, this cable gauge is with the continuous maximum permissible temperature of 75°C (THHW cable). This is assumes a surrounding air temperature of 40°C or less and wiring distance of 20 m or less.
For FR-F840-01160(55K) or higher, this cable gauge is with continuous maximum permissible temperature of 90°C (THHN cable). This assumes a surrounding air temperature of 40°C or lower and in-enclosure wiring. (Selection example for use mainly in the United States.)

*3 For FR-F820-00930(22K) or lower and FR-F840-00930(45K) or lower, the cable gauge is with the continuous maximum permissible temperature of 70°C (PVC cable). This assumes a surrounding air temperature of 40°C or less and wiring distance of 20 m or less.
For FR-F820-01250(30K) or higher and FR-F840-01160(55K) or higher, this cable gauge is with continuous maximum permissible temperature of 90°C (XLPE cable). This assumes a surrounding air temperature of 40°C and in-enclosure wiring. (Selection example for use mainly in Europe.)

*4 The terminal screw size indicates the size of the terminal screw for R/L1, S/L2, T/L3, U, V, W, P/+, N/-, P1, P3, and the screw for earthing (grounding).
The screw size for earthing (grounding) of FR-F820-00930(22K) or higher is indicated in parentheses.
The screw size for P/+ terminal for connecting an option to FR-F840-03250(132K) or FR-F840-03610(160K) is indicated in parentheses.
The screw size for earthing (grounding) of FR-F840-04320(185K) or higher is indicated in parenthesis.

The line voltage drop can be calculated by the following formula:

$$\text{Line voltage drop [V]} = \frac{\sqrt{3} \times \text{wire resistance[m}\Omega\text{/m]} \times \text{wiring distance[m]} \times \text{current[A]}}{1000}$$

Use a larger diameter cable when the wiring distance is long or when it is desired to decrease the voltage drop (torque reduction) in the low speed range.

NOTE

- Tighten the terminal screw to the specified torque.
  A screw that has been tightened too loosely can cause a short circuit or malfunction.
  A screw that has been tightened too tightly can cause a short circuit or malfunction due to the unit breakage.
- Use crimping terminals with insulation sleeves to wire the power supply and motor.

◆Total wiring length

◆With induction motor

Connect one or more induction motors within the total wiring length shown in the following table.

Pr.72 setting (carrier frequency)	FR-F820-00046(0.75K) FR-F840-00023(0.75K)	FR-F820-00077(1.5K) FR-F840-00038(1.5K)	FR-F820-00105(2.2K) or higher FR-F840-00052(2.2K) or higher
2 (2 kHz) or lower	300 m	500 m	500 m
3 (3 kHz) or higher	200 m	300 m	500 m

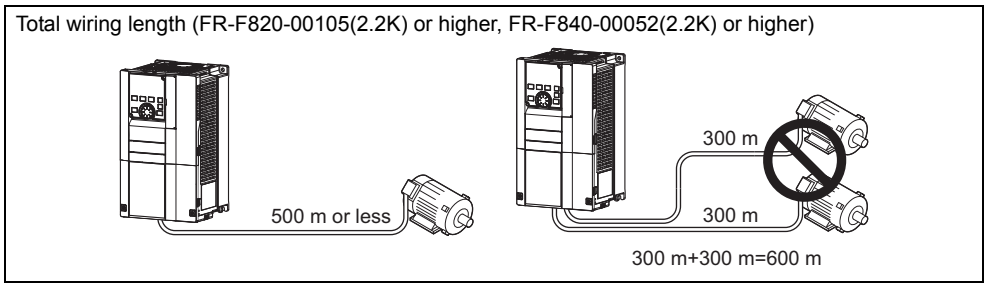

When driving a 400 V class motor by the inverter, surge voltages attributable to the wiring constants may occur at the motor terminals, deteriorating the insulation of the motor. In this case, take one of the following measures.

- Use a "400 V class inverter-driven insulation-enhanced motor" and set **Pr.72 PWM frequency selection** according to the wiring length.

Wiring length 50 m or shorter	Wiring length 50 m to 100 m	Wiring length longer than 100 m
15 (14.5 kHz) or lower	9 (9 kHz) or lower	4 (4 kHz) or lower

- For the FR-F840-01160(55K) or lower, connect a surge voltage suppression filter (FR-ASF-H/FR-BMF-H) at the output side of the inverter. For the FR-F840-01800(75K) or higher, connect a sine wave filter (MT-BSL/BSC) at the output side of the inverter.

◆With PM motor

Use the following length of wiring or shorter when connecting a PM motor.

Voltage class	Pr.72 setting (carrier frequency)	FR-F820-00077(1.5K) or lower, FR-F840-00038(1.5K) or lower	FR-F820-00105(2.2K) or higher, FR-F840-00052(2.2K) or higher
200 V	0 (2 kHz) to 15 (14 kHz)	100 m	100 m
400 V	5 (2 kHz) or lower	100 m	100 m
	6 to 9 (6 kHz)	50 m	100 m
	10 (10 kHz) or higher	50 m	50 m

Use one PM motor for one inverter. Multiple PM motors cannot be connected to an inverter.

NOTE

- Especially for long-distance wiring or wiring with shielded cables, the inverter may be affected by a charging current caused by stray capacitances of the wiring, leading to an activation of the overcurrent protection, malfunction of the fast-response current limit operation, or even to an inverter failure. It may also cause a malfunction or fault of the equipment connected ON the inverter output side. Stray capacitances of the wiring differ by the installation condition, use the total wiring length in the table above as reference values. If the fast-response current limit function malfunctions, disable this function. (Refer to **Pr.156 Stall prevention operation selection** on page 248.)
- A surge voltage suppression filter (FR-ASF-H/FR-BMF-H) can be used under V/F control and Advanced magnetic flux vector control. A sine wave filter (MT-BSL/BSC) can be used under V/F control. Do not use the filters under different control methods.
- For the details of **Pr.72 PWM frequency selection**, refer to page 179.
- For the details of the surge voltage suppression filter (FR-ASF-H/FR-BMF-H) and the sine wave filter (MT-BSL/BSC), refer to the Instruction Manual of each option.
- Refer to page 82 to drive a 400 V class motor by an inverter.

2.5.4 Earthing (grounding) precautions

- Always earth (ground) the motor and inverter.

◆Purpose of earthing (grounding)

Generally, an electrical apparatus has an earth (ground) terminal, which must be connected to the ground before use.
An electrical circuit is usually insulated by an insulating material and encased. However, it is impossible to manufacture an insulating material that can shut off a leakage current completely, and actually, a slight current flows into the case. The purpose of earthing (grounding) the case of an electrical apparatus is to prevent operators from getting an electric shock from this leakage current when touching it.
To avoid the influence of external noises, this earthing (grounding) is important to audio equipment, sensors, computers and other apparatuses that handle low-level signals or operate very fast.

◆Earthing (grounding) methods and earthing (grounding) work

As described previously, earthing (grounding) is roughly classified into an electrical shock prevention type and a noise-influenced malfunction prevention type. Therefore, these two types should be clearly distinguished, and the following work must be done to prevent the leakage current having the inverter's high frequency components from entering the malfunction prevention type earthing (grounding):

- Whenever possible, use the independent earthing (grounding) for the inverter.
  If independent earthing (grounding) (I) is not available, use (II) common earthing (grounding) in the figure below where the inverter is connected with the other equipment at an earthing (grounding) point. Do not use the other equipment's earthing (grounding) cable to earth (ground) the inverter as shown in (III).
  A leakage current containing many high frequency components flows into the earthing (grounding) cables of the inverter and peripheral devices. Because of this, the inverter must be earthed (grounded) separately from EMI-sensitive devices.
  In a high building, it may be effective to use the EMI prevention type earthing (grounding) connecting to an iron structure frame, and electric shock prevention type earthing (grounding) with the independent earthing (grounding) together.
  This inverter must be earthed (grounded). Earthing (Grounding) must conform to the requirements of national and local safety regulations and electrical codes. (NEC section 250, IEC 536 class 1 and other applicable standards).
  A neutral-point earthed (grounded) power supply for 400 V class inverter in compliance with EN standard must be used.
  Use the thickest possible earthing (grounding) cable. The earthing (grounding) cable should be the size indicated in the table on page 41.
  The earthing (grounding) point should be as close as possible to the inverter, and the earth (ground) wire length should be as short as possible.
  Run the earthing (grounding) cable as far away as possible from the I/O wiring of equipment sensitive to noises and run them in parallel in the minimum distance.

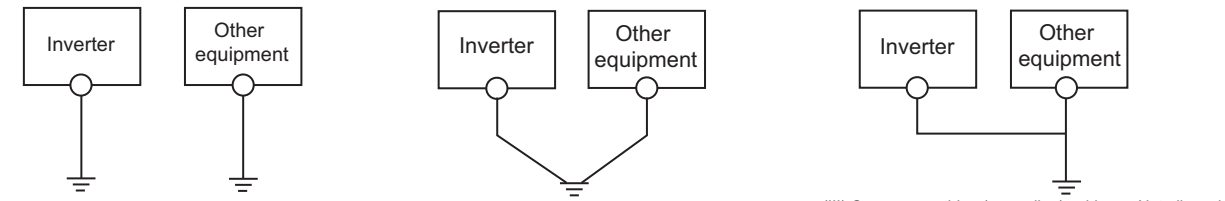

(I) Independent earthing (grounding).....Good (II) Common earthing (grounding).....Good (III) Common earthing (grounding) cable.....Not allowed

To be compliant with the EU Directive (Low Voltage Directive), refer to the **Instruction Manual (Startup).**

2.6 Control circuit

2.6.1 Details on the control circuit terminals

Input signal function of the terminals in [ ] can be selected by setting **Pr.178 to Pr.196 (I/O terminal function selection)**. (Refer to page 329.)

◆Input signal

Type	Terminal Symbol	Terminal name	Terminal function description		Rated specification	Refer to page
Contact input	STF	Forward rotation start	Turn ON the STF signal to start forward rotation and turn it OFF to stop.	When the STF and STR signals are turned ON simultaneously, the stop command is given.	Input resistance 4.7 kΩ Voltage when contacts are open: 21 to 27 VDC When contacts are short-circuited: 4 to 6 mADC	335
	STR	Reverse rotation start	Turn ON the STR signal to start reverse rotation and turn it OFF to stop.			
	STP (STOP)	Start self-holding selection	Turn ON the STP (STOP) signal to self-hold the start signal.			335
	RH, RM, RL	Multi-speed selection	Multi-speed can be selected according to the combination of RH, RM and RL signals.			222
	JOG	Jog mode selection	Turn ON the JOG signal to enable JOG operation (initial setting) and turn ON the start signal (STF or STR) to start JOG operation.			221
		Pulse train input	Terminal JOG is also used as a pulse train input terminal. To use as a pulse train input terminal, change the **Pr.291** setting. (maximum input pulse: 100k pulses/s)		Input resistance 2 kΩ When contacts are short-circuited: 8 to 13 mADC	218
	RT	Second function selection	Turn ON the RT signal to enable the second function. When the second function such as "second torque boost" and "second V/F (base frequency)" is set, turning ON the RT signal enables the selected function.		Input resistance 4.7 kΩ Voltage when contacts are open: 21 to 27 VDC When contacts are short-circuited: 4 to 6 mADC	333
	MRS	Output stop	Turn ON the MRS signal (20 ms or more) to stop the inverter output. Use this signal to shut off the inverter output when stopping the motor with an electromagnetic brake.			332
	RES	Reset	Use this signal to reset a fault output provided when a protective function is activated. Turn ON the RES signal for 0.1 s or longer, then turn it OFF. In the initial setting, reset is set always-enabled. By setting **Pr.75**, reset can be set enabled only at fault occurrence. The inverter recovers about 1 s after the reset is released.			162
	AU	Terminal 4 input selection	The terminal 4 function is available only when the AU signal is turned ON. Turning the AU signal ON makes terminal 2 invalid.			306
	CS	No function	Use **Pr.186 CS terminal function selection** for function assignment.			—
	SD	Contact input common (sink)*2	Common terminal for the contact input terminal (sink logic), terminal FM.		—	—
		External transistor common (source)*3	Connect this terminal to the power supply common terminal of a transistor output (open collector output) device, such as a programmable controller, in the source logic to avoid malfunction by undesirable current.			
		24 VDC power supply common	Common terminal for the 24 VDC power supply (terminal PC, terminal +24) Isolated from terminals 5 and SE.			
	PC	External transistor common (sink)*2	Connect this terminal to the power supply common terminal of a transistor output (open collector output) device, such as a programmable controller, in the sink logic to avoid malfunction by undesirable currents.		Power supply voltage range 19.2 to 28.8 VDC Permissible load current 100 mA	51
		Contact input common (source)*3	Common terminal for contact input terminal (source logic).			
		24 VDC power supply	Can be used as a 24 VDC 0.1 A power supply.			

Type	Terminal Symbol	Terminal name	Terminal function description	Rated specification	Refer to page
Frequency setting	10E	Frequency setting power supply	When connecting the frequency setting potentiometer at an initial status, connect it to the terminal 10. Change the input specifications of the terminal 2 using **Pr.73** when connecting it to the terminal 10E.	10 VDC ±0.4 V Permissible load current 10 mA	306
	10			5 VDC ±0.5 V Permissible load current 10 mA	306
	2	Frequency setting (voltage)	Inputting 0 to 5 VDC (or 0 to 10 V, 0 to 20 mA) provides the maximum output frequency at 5 V (10 V, 20 mA) and makes input and output proportional. Use **Pr.73** to switch among input 0 to 5 VDC (initial setting), 0 to 10 VDC, and 0 to 20 mA. Set the voltage/current input switch in the ON position to select current input (0 to 20 mA). *1	When voltage is input: Input resistance 10 kΩ ±1 kΩ Maximum permissible voltage 20 VDC When current is input: Input resistance 245 Ω ±5 Ω Permissible maximum current 30 mA 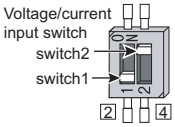	306
	4	Frequency setting (current)	Inputting 4 to 20 mADC (or 0 to 5 V, 0 to 10 V) provides the maximum output frequency at 20 mA and makes input and output proportional. This input signal is valid only when the AU signal is ON (terminal 2 input is invalid). Use **Pr.267** to switch among input 4 to 20 mA (initial setting), 0 to 5 VDC, and 0 to 10 VDC. Set the voltage/current input switch in the OFF position to select voltage input (0 to 5 V/0 to 10 V). *1 Use **Pr.858** to switch terminal functions.		306
	1	Frequency setting auxiliary	Inputting 0 to ±5 VDC or 0 to ±10 VDC adds this signal to terminal 2 or 4 frequency setting signal. Use **Pr.73** to switch between input 0 to ±5 VDC and 0 to ±10 VDC (initial setting). Use **Pr.868** to switch terminal functions.	Input resistance 10 kΩ ±1 kΩ Permissible maximum voltage ±20 VDC	306
	5	Frequency setting common	Common terminal for frequency setting signal (terminal 2, 1 or 4) and analog output terminal AM, CA. Do not earth (ground).	—	306
Thermistor	10 2	PTC thermistor input	For receiving PTC thermistor outputs. When PTC thermistor is valid (**Pr.561** ≠ "9999"), the terminal 2 is not available for frequency setting.	Applicable PTC thermistor specification Overheat detection resistance: 0.5 to 30 kΩ (Set by **Pr.561**)	225
External power supply input	+24	24 V external power supply input	For connecting a 24 V external power supply. If a 24 V external power supply is connected, power is supplied to the control circuit while the main power circuit is OFF.	Input voltage 23 to 25.5 VDC Input current 1.4 A or less	57

*1 Set **Pr.73, Pr.267**, and the voltage/current input switch correctly, then input an analog signal in accordance with the setting.
Applying a voltage with the voltage/current input switch ON (current input is selected) or a current with the switch OFF (voltage input is selected) could cause component damage of the inverter or analog circuits of output devices. (For the details, refer to page 306.)

*2 Sink logic is initially set for the FM-type inverter.

*3 Source logic is initially set for the CA-type inverter.

◆Output signal

Type	Terminal Symbol	Terminal name	Terminal function description		Rated specification	Refer to page
Relay	A1, B1, C1	Relay output 1 (fault output)	1 changeover contact output that indicates that an inverter's protective function has been activated and the outputs are stopped. Fault: discontinuity across B and C (continuity across A and C), Normal: continuity across Band C (discontinuity across A and C)		Contact capacity 230 VAC 0.3 A (power factor = 0.4) 30 VDC 0.3 A	288
	A2, B2, C2	Relay output 2	1 changeover contact output			288
Open collector	RUN	Inverter running	Switched to LOW when the inverter output frequency is equal to or higher than the starting frequency (initial value 0.5 Hz). Switched to HIGH during stop or DC injection brake operation.		Permissible load 24 VDC (maximum 27 VDC) 0.1 A (The voltage drop is 2.8 V at maximum while the signal is ON.) LOW is when the open collector output transistor is ON (conducted). HIGH is when the transistor is OFF (not conducted).	288
	SU	Up to frequency	Switched to LOW when the output frequency is within the set frequency range ±10% (initial value). Switched to HIGH during acceleration/deceleration and at a stop.	Fault code (4 bits) output. (Refer to page 302.)		294
	OL	Overload warning	Switched to LOW when stall prevention is activated by the stall prevention function. Switched to HIGH when stall prevention is canceled.			259
	IPF	Instantaneous power failure	Switched to LOW when an instantaneous power failure occurs or when the undervoltage protection is activated.			414, 426
	FU	Frequency detection	Switched to LOW when the inverter output frequency is equal to or higher than the preset detection frequency, and to HIGH when it is less than the preset detection frequency.			294
	SE	Open collector output common	Common terminal for terminals RUN, SU, OL, IPF, FU		—	—
Pulse	FM *1	For meter	Outputs a selected monitored item (such as output frequency) among several monitored items. The signal is not output during an inverter reset. The output signal is proportional to the magnitude of the corresponding monitoring item. Use **Pr.55, Pr.56, and Pr.866** to set full scales for the monitored output frequency, output current, and torque. (Refer to page 273.)	Output item: Output frequency (initial setting)	Permissible load current 2 mA For full scale 1440 pulses/s	273
		NPN open collector output		This terminal can be used for open collector outputs by setting **Pr.291**.	Maximum output pulse 50k pulses/s Permissible load current 80 mA	218
Analog	AM	Analog voltage output		Output item: Output frequency (initial setting)	Output signal 0 to ±10 VDC, Permissible load current 1 mA (load impedance 10 kΩ or more) Resolution 8 bits	273
	CA *2	Analog current output			Load impedance 200 Ω to 450 Ω Output signal 0 to 20 mADC	273

*1 Terminal FM is provided in the FM-type inverter.
*2 Terminal CA is provided in the CA-type inverter.

◆Communication

Type	Terminal Symbol		Terminal name	Terminal function description		Refer to page
RS-485	—		PU connector	With the PU connector, communication can be made through RS-485. (For connection on a 1:1 basis only) Conforming standard: EIA-485 (RS-485) Transmission format: Multidrop link Communication speed: 4800 to 115200 bps Wiring length: 500 m		441
	RS-485 terminals	TXD+	Inverter transmission terminal	The RS-485 terminals enables the communication by RS-485. Conforming standard: EIA-485 (RS-485) Transmission format: Multidrop link Communication speed: 300 to 115200 bps Overall length: 500 m		443
		TXD-				
		RXD+	Inverter reception terminal			
		RXD-				
		SG	Earthing (grounding)			
USB	—		USB A connector	A connector (receptacle) A USB memory device enables parameter copies and the trace function.	Interface: Conforms to USB1.1 (USB2.0 full-speed compatible) Transmission speed: 12 Mbps	61
			USB B connector	Mini B connector (receptacle) Connected to a personal computer via USB to enable setting, monitoring, test operations of the inverter by FR Configurator2.		61

◆Safety stop signal

Terminal Symbol	Terminal name	Terminal function description	Rated specification	Refer to page
S1	Safety stop input (Channel 1)	The terminals S1 and S2 are used for the safety stop input signal for the safety relay module. The terminals S1 and S2 are used at the same time (dual channel). Inverter output is shutoff by shortening/opening between terminals S1 and SIC, or between S2 and SIC. In the initial status, terminals S1 and S2 are shorted with the terminal PC by shorting wires. The terminal SIC is shorted with the terminal SD. Remove the shorting wires and connect the safety relay module when using the safety stop function.	Input resistance 4.7 kΩ Input current 4 to 6 mADC (with 24 VDC input)	58
S2	Safety stop input (Channel 2)			
SIC	Safety stop input terminal common	Common terminal for terminals S1 and S2.	—	
SO	Safety monitor output (open collector output)	Indicates the safety stop input signal status. Switched to LOW when the status is other than the internal safety circuit failure. Switched to HIGH during the internal safety circuit failure status. (LOW is when the open collector output transistor is ON (conducted). HIGH is when the transistor is OFF (not conducted).) Refer to the Safety stop function instruction manual (BCN-A23228-001) when the signal is switched to HIGH while both terminals S1 and S2 are open. (Please contact your sales representative for the manual.)	Permissible load D24 VDC (27 VDC at maximum), 0.1 A (The voltage drop is 3.4 V at maximum while the signal is ON.) (The voltage drop is 3.4 V at maximum while the signal is ON.)	
SOC	Safety monitor output terminal common	Common terminal for terminal SO.	—	

2.6.2 Control logic (sink/source) change

Change the control logic of input signals as necessary.

To change the control logic, change the jumper connector position on the control circuit board.

Connect the jumper connector to the connector pin of the desired control logic.

The control logic of input signals is initially set to the sink logic (SINK) for the FM type.

The control logic of input signals is initially set to the source logic (SOURCE) for the CA type.

(The output signals may be used in either the sink or source logic independently of the jumper connector position.)

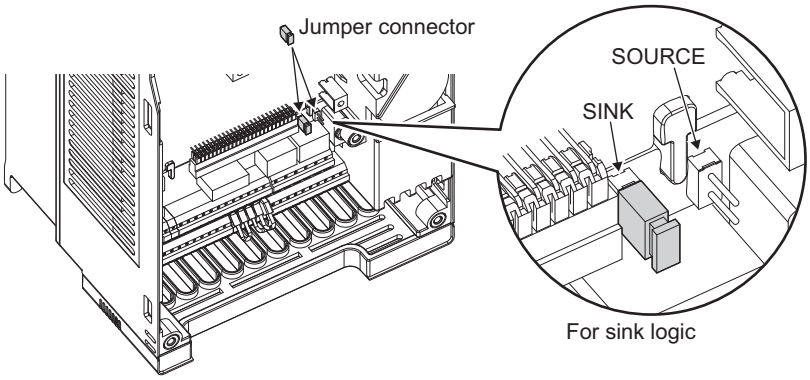

NOTE

- Make sure that the jumper connector is installed correctly.
- Never change the control logic while power is ON.

◆Sink logic and source logic

- In the sink logic, a signal switches ON when a current flows from the corresponding signal input terminal. Terminal SD is common to the contact input signals. Terminal SE is common to the open collector output signals.
- In the source logic, a signal switches ON when a current flows into the corresponding signal input terminal. Terminal PC is common to the contact input signals. Terminal SE is common to the open collector output signals.

●Current flow concerning the input/output signal when sink logic is selected

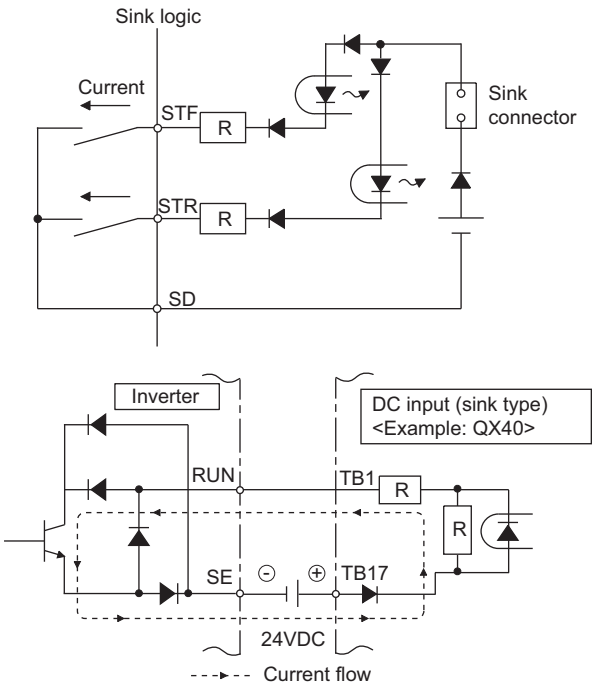

●Current flow concerning the input/output signal when source logic is selected

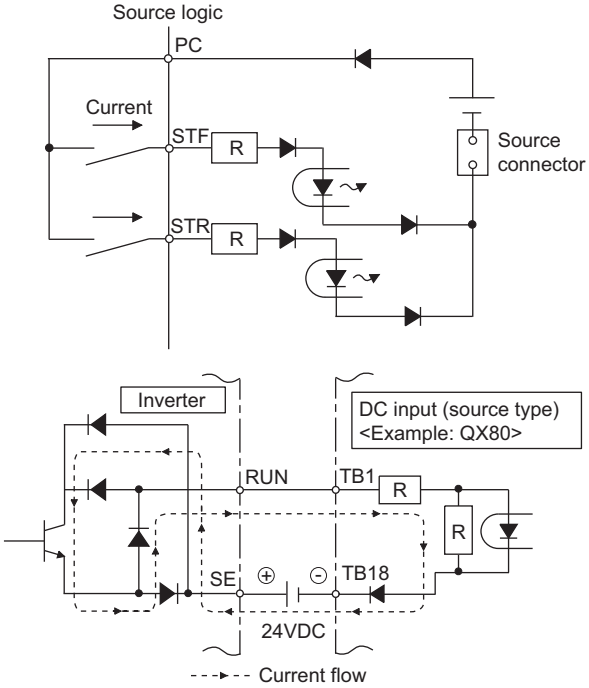

- When using an external power supply for transistor output

Sink logic

Use the terminal PC as a common terminal, and perform wiring as shown below. (Do not connect terminal SD of the inverter with the terminal 0 V of the external power supply. When using terminals PC-SD as a 24 VDC power supply, do not install an external power supply in parallel with the inverter. Doing so may cause a malfunction in the inverter due to undesirable currents.)

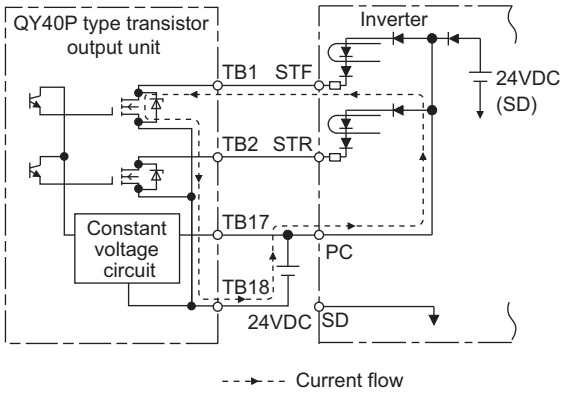

Source logic

Use the terminal SD as a common terminal, and perform wiring as shown below. (Do not connect terminal PC of the inverter with the terminal +24 V of the external power supply. When using terminals PC-SD as a 24 VDC power supply, do not install an external power supply in parallel with the inverter. Doing so may cause a malfunction in the inverter due to undesirable currents.)

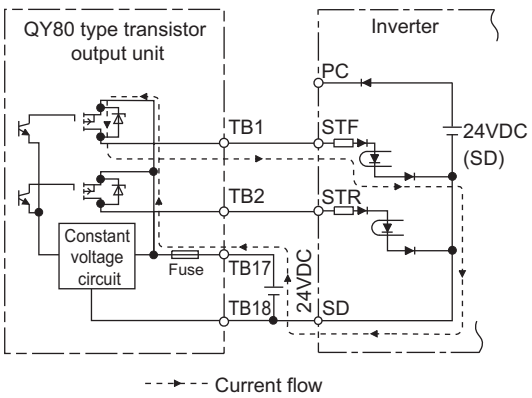

2

2.6.3 Wiring of control circuit

◆Control circuit terminal layout

• Recommended cable gauge: 0.3 to 0.75 mm^2

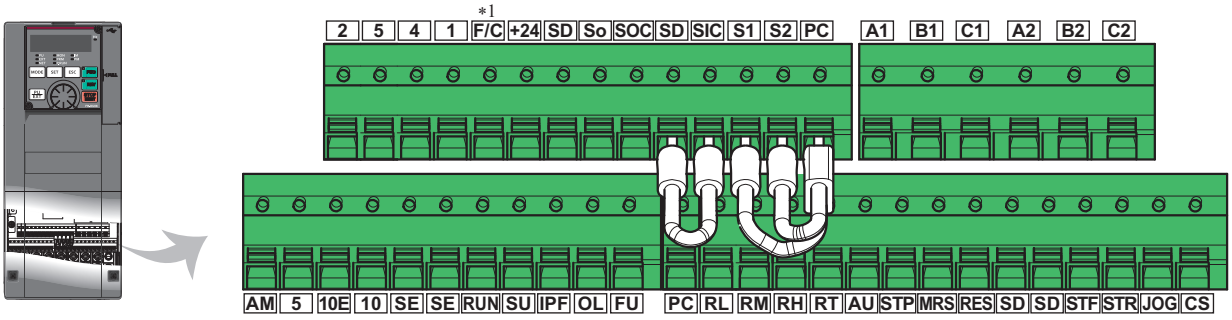

*1 This terminal operates as the terminal FM for the FM type, and as the terminal CA for the CA type.

◆Wiring method

• Power supply connection

For the control circuit wiring, strip off the sheath of a cable, and use it with a blade terminal. For a single wire, strip off the sheath of the wire and apply directly.

Insert the blade terminal or the single wire into a socket of the terminal.

(1)Strip off the sheath for the below length. If the length of the sheath peeled is too long, a short circuit may occur with neighboring wires. If the length is too short, wires might come off.

Wire the stripped cable after twisting it to prevent it from becoming loose. In addition, do not solder it.

Cable stripping size

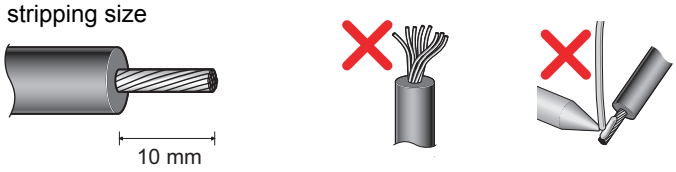

(2)Crimp the blade terminal.

Insert wires to a blade terminal, and check that the wires come out for about 0 to 0.5 mm from a sleeve.

Check the condition of the blade terminal after crimping. Do not use a blade terminal of which the crimping is inappropriate, or the face is damaged.

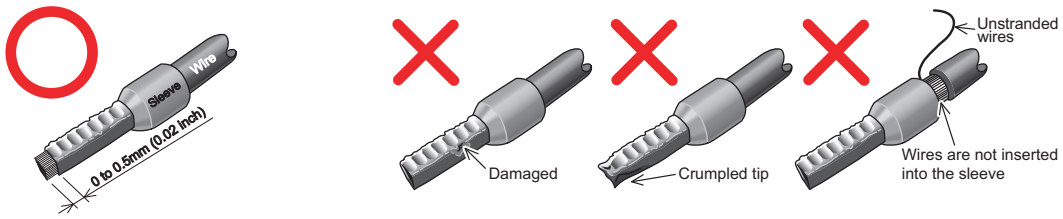

• Blade terminals commercially available (as of February 2012)

Phoenix Contact Co., Ltd.

Cable gauge (mm^2)	Blade terminal model			Crimping tool name
	With insulation sleeve	Without insulation sleeve	For UL wire*1	
0.3	AI 0,5-10WH	—	—	CRIMPFOX 6
0.5	AI 0,5-10WH	—	AI 0,5-10WH-GB	
0.75	AI 0,75-10GY	A 0,75-10	AI 0,75-10GY-GB	
1	AI 1-10RD	A 1-10	AI 1-10RD/1000GB	
1.25, 1.5	AI 1,5-10BK	A 1,5-10	AI 1,5-10BK/1000GB*2	
0.75 (for two wires)	AI-TWIN 2 × 0,75-10GY	—	—	

*1 A blade terminal with an insulation sleeve compatible with the MTW wire which has a thick wire insulation.

*2 Applicable for the terminal A1, B1, C1, A2, B2, C2.

NICHIFU Co., Ltd.

Cable gauge (mm^2)	Blade terminal product number	Insulation product number	Crimping tool product number
0.3 to 0.75	BT 0.75-11	VC 0.75	NH 69

(3)Insert the wires into a socket.

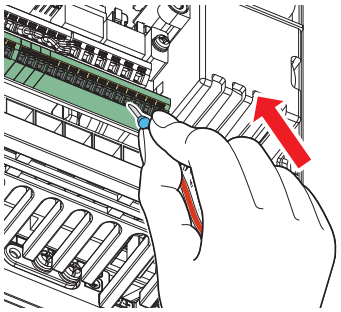

When using a single wire or stranded wires without a blade terminal, push the open/close button all the way down with a flathead screwdriver, and insert the wire.

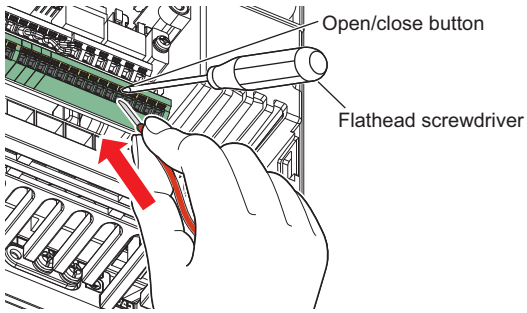

NOTE

- When using stranded wires without a blade terminal, twist enough to avoid short circuit with a nearby terminals or wires.
- Place the flathead screwdriver vertical to the open/close button. In case the blade tip slips, it may cause an inverter damage or injury.

- Wire removal

Pull the wire while pushing the open/close button all the way down firmly with a flathead screwdriver.

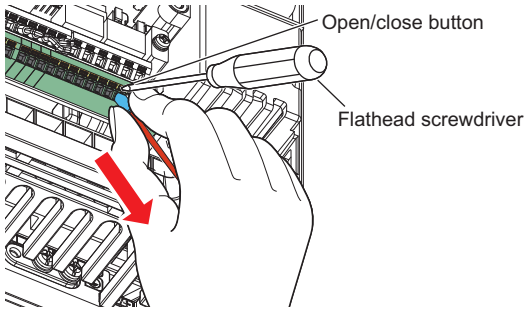

NOTE

- Pulling out the wire forcefully without pushing the open/close button all the way down may damage the terminal block.
- Use a small flathead screwdriver (tip thickness: 0.4 mm/tip width: 2.5 mm).
  If a flathead screwdriver with a narrow tip is used, terminal block may be damaged.
  Commercially available products (as of February 2012)

Name	Model	Manufacturer
Driver	SZF 0- 0,4 × 2,5	Phoenix Contact Co., Ltd.

- Place the flathead screwdriver vertical to the open/close button. In case the blade tip slips, it may cause an inverter damage or injury.

◆Common terminals of the control circuit (SD, PC, 5, SE)

- Terminals SD (sink logic), PC (source logic), 5, and SE are common terminals (0V) for I/O signals. (All common terminals are isolated from each other.) Do not earth (ground) these terminals. Avoid connecting the terminal SD (sink logic) with 5, the terminal PC (source logic) with 5, and the terminal SE with 5.
- In the sink logic, terminal SD is a common terminal for the contact input terminals (STF, STR, STP (STOP), RH, RM, RL, JOG, RT, MRS, RES, AU, CS) and the pulse train output terminal (FM*1). The open collector circuit is isolated from the internal control circuit by photocoupler.
- In the source logic, terminal PC is a common terminal for the contact input terminals (STF, STR, STP (STOP), RH, RM, RL, JOG, RT, MRS, RES, AU, CS). The open collector circuit is isolated from the internal control circuit by photocoupler.
- Terminal 5 is a common terminal for the frequency setting terminals (2, 1 or 4) and the analog output terminals (AM, CA*2). It should be protected from external noise using a shielded or twisted cable.
- Terminal SE is a common terminal for the open collector output terminals (RUN, SU, OL, IPF, FU). The contact input circuit is isolated from the internal control circuit by photocoupler.

*1 Terminal FM is provided in the FM-type inverter.
*2 Terminal CA is provided in the CA-type inverter.

◆Signal inputs by contactless switches

The contact input terminals of the inverter (STF, STR, STP (STOP), RH, RM, RL, JOG, RT, MRS, RES, AU, CS) can be controlled using a transistor instead of a contact switch as shown below.

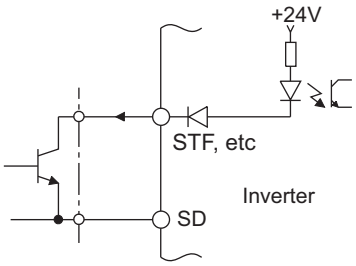

External signal input using transistor (sink logic)

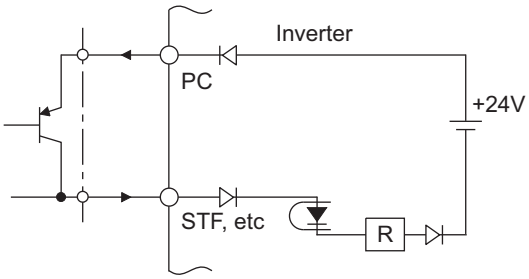

External signal input using transistor (source logic)

2.6.4 Wiring precautions

- It is recommended to use a cable of 0.3 to 0.75 mm^2 for the connection to the control circuit terminals.
- The wiring length should be 30 m (200 m for the terminal FM) at the maximum.
- Use two or more parallel micro-signal contacts or twin contacts to prevent contact faults when using contact inputs since the control circuit input signals are micro-currents.

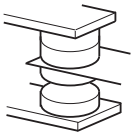

Micro signal contacts

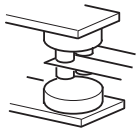

Twin contacts

- To suppress EMI, use shielded or twisted cables for the control circuit terminals and run them away from the main and power circuits (including the 200 V relay sequence circuit). For the cables connected to the control circuit terminals, connect their shields to the common terminal of the connected control circuit terminal. When connecting an external power supply to the terminal PC, however, connect the shield of the power supply cable to the negative side of the external power supply. Do not directly earth (ground) the shield to the enclosure, etc.
- Always apply a voltage to the fault output terminals (A1, B1, C1, A2, B2, C2) via a relay coil, lamp, etc.
- For the FR-F820-03160(75K) or higher and FR-F840-02160(90K) or higher, separate the wiring of the control circuit away from the wiring of the main circuit.
  Make cuts in rubber bush of the inverter side and lead the wires through.

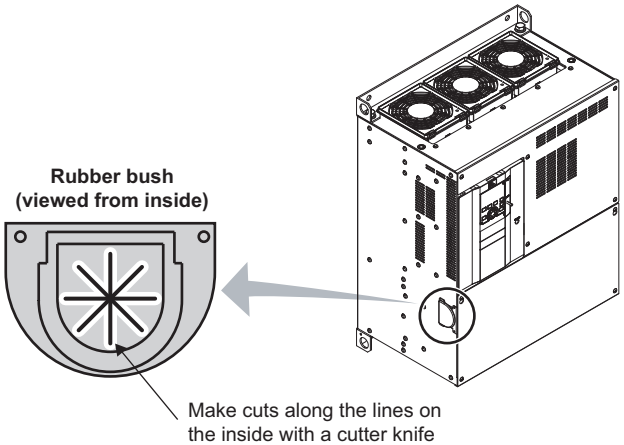

<Wiring example>

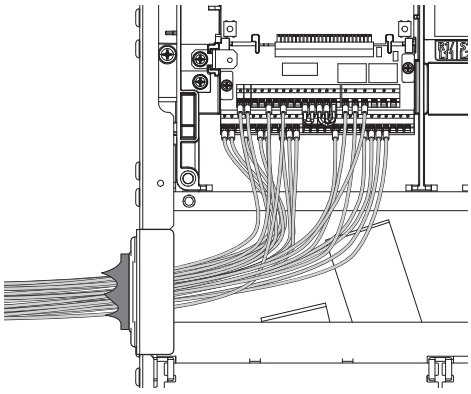

2.6.5 When using separate power supplies for the control circuit and the main circuit

◆Cable size for the control circuit power supply (terminals R1/L11 and S1/L21)

- Terminal screw size: M4
- Cable gauge: 0.75 mm^2 to 2 mm^2
- Tightening torque: 1.5 N·m

◆Connection method

<Connection diagram>

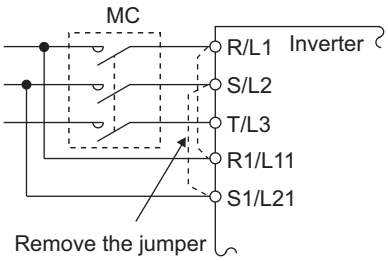

When a fault occurs, opening of the electromagnetic contactor (MC) on the inverter power supply side results in power loss in the control circuit, disabling the fault output signal retention. Terminals R1/L11 and S1/L21 are provided to hold a fault signal. In this case, connect the power supply terminals R1/L11 and S1/L21 of the control circuit to the input side of the MC.
Do not connect the power cable to incorrect terminals. Doing so may damage the inverter.

- FR-F820-00250(5.5K) or lower, FR-F840-00126(5.5K) or lower

(a) Remove the upper screws.
(b) Remove the lower screws.
(c) Remove the jumper.
(d) Connect the separate power supply cable for the control circuit to the lower terminals (R1/L11, S1/L21).

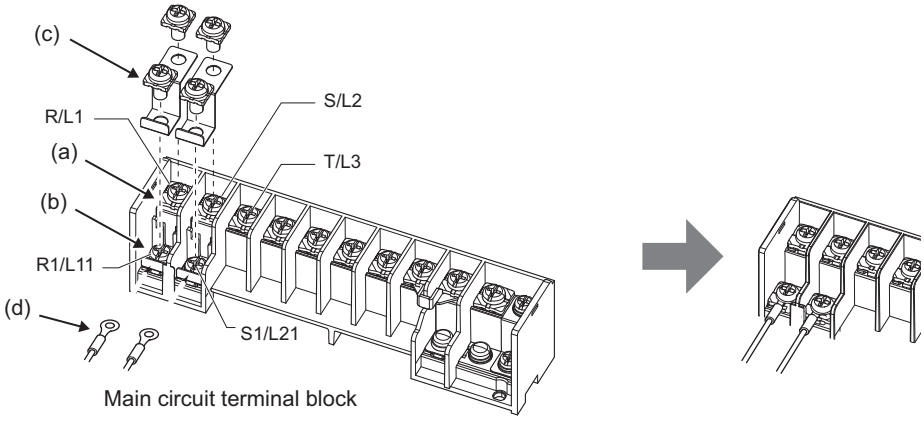

- FR-F820-00340(7.5K) to FR-F820-00630(15K), FR-F840-00170(7.5K) to FR-F840-00380(18.5K)

(a) Remove the upper screws.
(b) Remove the lower screws.
(c) Remove the jumper.
(d) Connect the separate power supply cable for the control circuit to the upper terminals (R1/L11, S1/L21).

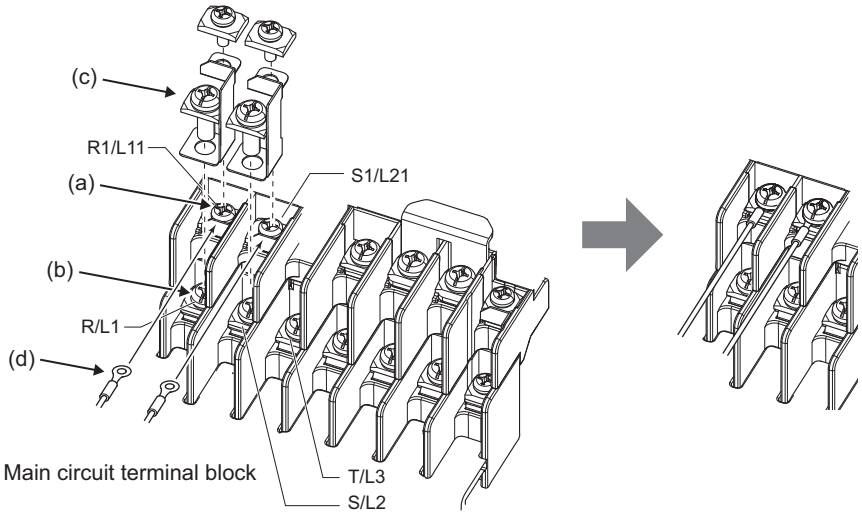

2

- FR-F820-00770(18.5K) or higher, FR-F840-00470(22K) or higher
  - (a) Remove the upper screws.
  - (b) Remove the lower screws.
  - (c) Pull the jumper toward you to remove.
  - (d) Connect the separate power supply cable for the control circuit to the upper terminals (R1/L11, S1/L21).

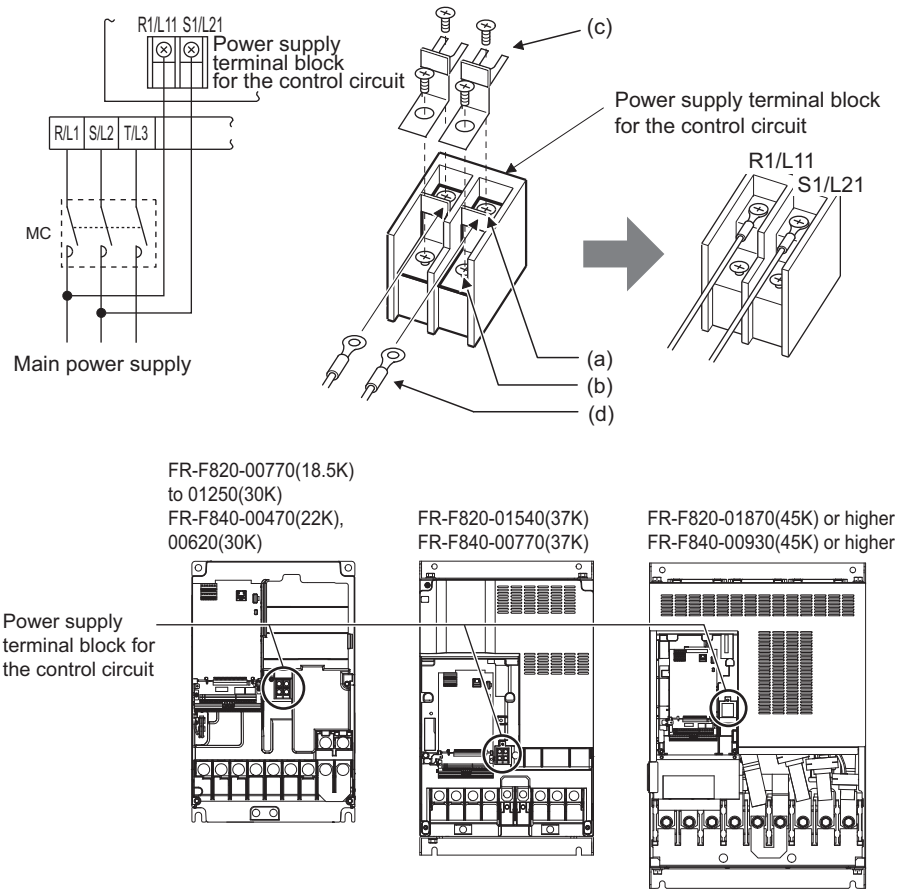

NOTE

- When using separate power supplies, always remove the jumpers across terminals R/L1 and R1/L11 and across S/L2 and S1/L21. The inverter may be damaged if the jumpers are not removed.
- The voltage should be the same as that of the main control circuit when the control circuit power is supplied from other than the input side of the MC.
- The power capacity necessary when separate power is supplied from R1/L11 and S1/L21 differs according to the inverter capacity.

Inverter	Power supply capacity
FR-F820-00630(15K) or lower FR-F840-00380(18.5K) or lower	60 VA
FR-F820-00770(18.5K) or higher FR-F840-00470(22K) or higher	80 VA

- If the main circuit power is switched OFF (for 0.1 s or more) then ON again, the inverter is reset and a fault output will not be held.

2.6.6 When supplying 24 V external power to the control circuit

Connect a 24 V external power supply across terminals +24 and SD. Connecting a 24 V external power supply enables I/O terminal ON/OFF operation, operation panel displays, control functions, and communication during communication operation even at power-OFF of inverter's main circuit power supply. When the main circuit power supply is turned ON, the power supply source changes from the 24 V external power supply to the main circuit power supply.

◆Specification of the applicable 24 V external power supply

Item	Rated specification
Input voltage	23 to 25.5 VDC
Input current	1.4 A or less

Commercially available products (as of October 2013)

Model	Manufacturer
S8JX-N05024C *1 Specifications: Capacity 50 W, output voltage (DC) 24 V, output current 2.1 A Installation method: Front installation with cover or S8VS-06024 *1 Specifications: Capacity 60W, output voltage (DC) 24 V, output current 2.5 A Installation method: DIN rail installation	OMRON Corporation

*1 For the latest information about OMRON power supply, contact OMRON corporation.

◆Starting and stopping the 24 V external power supply operation

- Supplying 24 V external power while the main circuit power is OFF starts the 24 V external power supply operation. Likewise, turning OFF the main circuit power while supplying 24 V external power starts the 24 V external power supply operation.
- Turning ON the main circuit power stops the 24 V external power supply operation and enables the normal operation.

NOTE

- When the 24 V external power is supplied while the main circuit power supply is OFF, the inverter operation is disabled.
- In the initial setting, when the main power supply is turned ON during the 24 V external power supply operation, a reset is performed in the inverter, then the power supply changes to the main circuit power supply. (The reset can be disabled using **Pr.30**. (Refer to page 508.))

◆Confirming the 24 V external power supply input

- During the 24 V external power supply operation, "EV" flickers on the operation panel. The alarm lamp also flickers. Thus, the 24 V external power supply operation can be confirmed even when the operation panel is removed.

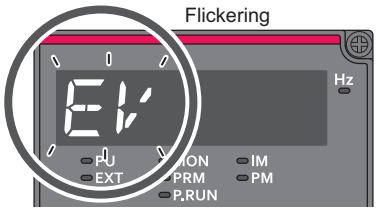

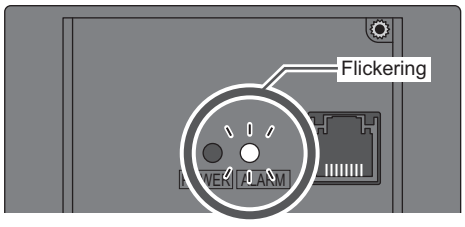

- During the 24 V external power supply operation, the 24 V external power supply operation signal (EV) is output. To use the EV signal, set "68 (positive logic) or 168 (negative logic)" in one of **Pr.190 to Pr.196 (output terminal function selection)** to assign function to an output terminal.

◆Operation while the 24 V external power is supplied

- Faults history and parameters can be read and parameters can be written (when the parameter write from the operation panel is enabled) using the operation panel keys.
- The safety stop function is invalid during the 24 V external power supply operation.
- During the 24 V external power supply operation, monitored items and signals related to inputs to main circuit power supply, such as output current, converter output voltage, and IPF signal, are invalid.
- The faults, which have occurred when the main circuit power supply is ON, continue to be output after the power supply is changed to the 24 V external power supply. Perform the inverter reset or turn OFF then ON the power to reset the faults.
- The retry function is invalid for all faults during the 24 V external power supply.
- If the power supply changes from the main circuit power supply to the 24 V external power supply while measuring the main circuit capacitor's life, the measurement completes after the power supply changes back to the main circuit power supply (**Pr.259** = "3").
- The output data is retained when "1 or 11" is set in **Pr.495 Remote output selection**.

NOTE

- Inrush current equal to or higher than the 24 V external power supply specification may flow at power-ON. Confirm that the power supply and other devices are not affected by the inrush current and the voltage drop caused by it. Depending on the power supply, the inrush current protection may be activated to disable the power supply. Select the power supply and capacity carefully.
- When the wiring length between the external power supply and the inverter is long, the voltage often drops. Select the appropriate wiring size and length to keep the voltage in the rated input voltage range.
- In a serial connection of several inverters, the current increases when it flows through the inverter wiring near the power supply. The increase of the current causes voltage to drop further. When connecting different inverters to different power supplies, use the inverters after confirming that the input voltage of each inverter is within the rated input voltage range. Depending on the power supply, the inrush current protection may be activated to disable the power supply. Select the power supply and capacity carefully.
- "E.SAF or E.P24" may appear when the start-up time of the 24 V power supply is too long (less than 1.5 V/s) in the 24 V external power supply operation.
- "E.P24" may appear when the 24 V external power supply input voltage is low. Check the external power supply input.
- Do not touch the control circuit terminal block (circuit board) during the 24 V power supply operation (when conducted). Otherwise you may get an electric shock or burn.

2.6.7 Safety stop function

◆Function description

The terminals related to the safety stop function are shown below.

Terminal symbol	Terminal function description	
S1 *1	For input of the safety stop channel 1.	Between S1 and SIC, S2 and SIC Open: In safety stop mode Short: Other than the safety stop mode.
S2 *1	For input of the safety stop channel 2.	
SIC *1	Common terminal for S1 and S2.	
SO	Outputs when an alarm or failure is detected. The signal is output when no internal safety circuit failure*2 exists.	OFF: Internal safety circuit failure*2 ON: No internal safety circuit failure*2
SOC	Open collector output (terminal SO) common	

*1 In the initial status, terminals S1 and PC, S2 and PC, and SIC and SD are respectively shorted with shorting wires. To use the safety stop function, remove all the shortening wires, and then connect to the safety relay module as shown in the following connection diagram.

*2 At an internal safety circuit failure, the operation panel displays one of the faults shown on the next page.

NOTE

- Use the terminal SO to output a fault and to prevent restarting of the inverter. The signal cannot be used as safety stop input terminal to other devices.

◆Connection diagram

To prevent automatic restart after a fault occurrence, connect the reset button of a safety relay module or a safety programmable controller across the terminals SO and SOC. The reset button acts as the feedback input for the safety relay module or the safety programmable controller.

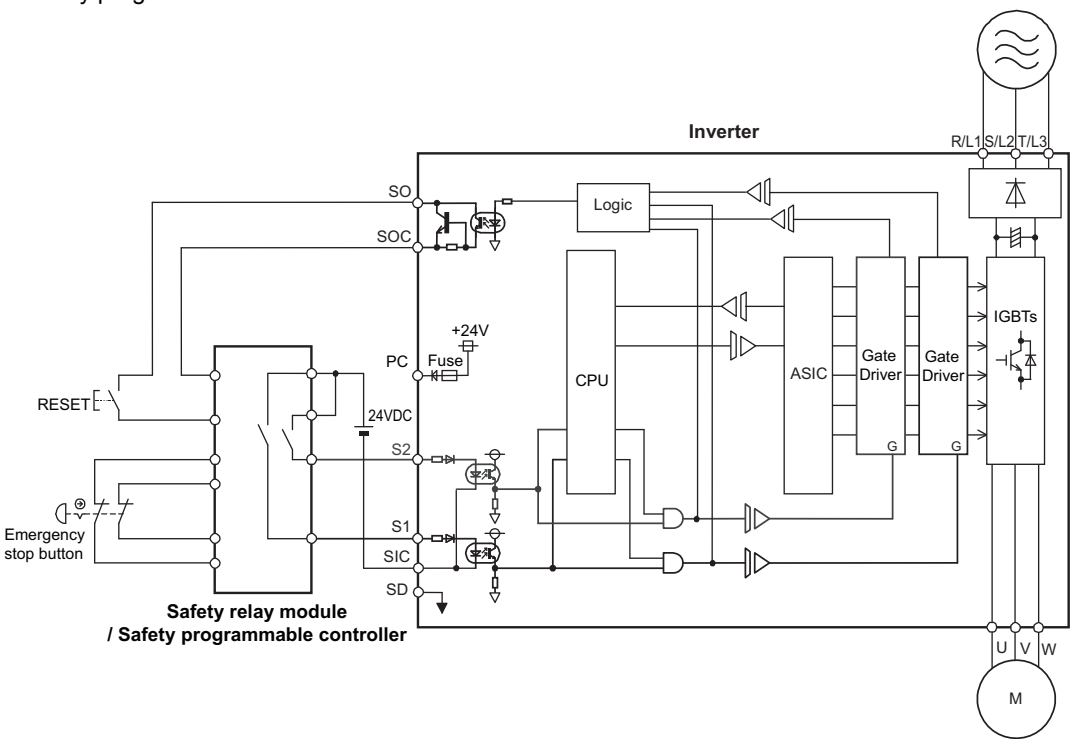

◆Safety stop function operation

Input power	Internal safety circuit status	Input terminal *1,*2		Output terminal	Inverter running status	Operation panel indication	
		S1	S2	SO		E.SAF *6	SA *7
OFF	—	—	—	OFF	Output shutoff (Safe state)	Not displayed	Not displayed
ON	Normal	ON	ON	ON *3	Drive enabled	Not displayed	Not displayed
	Normal	ON	OFF	OFF *4	Output shutoff (Safe state)	Displayed	Displayed
	Normal	OFF	ON	OFF *4	Output shutoff (Safe state)	Displayed	Displayed
	Normal	OFF	OFF	ON *3	Output shutoff (Safe state)	Not displayed	Displayed
	Fault	ON	ON	OFF	Output shutoff (Safe state)	Displayed	Not displayed *5
	Fault	ON	OFF	OFF	Output shutoff (Safe state)	Displayed	Displayed
	Fault	OFF	ON	OFF	Output shutoff (Safe state)	Displayed	Displayed
	Fault	OFF	OFF	OFF	Output shutoff (Safe state)	Displayed	Displayed

*1 ON: The transistor is conducted. OFF: The transistor is not conducted.
*2 When not using the safety stop function, short across terminals S1 and PC, S2 and PC, and SIC and SD to use the inverter. (In the initial status, terminals S1 and PC, S2 and PC, and SIC and SD are respectively shorted with shorting wires.)
*3 If any of the protective functions shown in the following table is activated, the terminal SO turns OFF.

Error definition	Operation panel indication
Option fault	E.OPT
Communication option fault	E.OP1
Parameter storage device fault	E.PE
Retry count excess	E.RET
Parameter storage device fault	E.PE2
Operation panel power supply short circuit/ RS-485 terminals power supply short circuit	E.CTE

Error definition	Operation panel indication
24 VDC power fault	E.P24
Safety circuit fault	E.SAF
Overspeed occurrence	E.OS
CPU fault	E.CPU
	E.5 to E.7
Internal circuit fault	E.13

*4 If the internal safety circuit is operated normally, the terminal SO remains ON until E.SAF is displayed, and the terminal SO turns OFF when E.SAF is displayed.
*5 SA is displayed when the terminals S1 and S2 are identified as OFF due to the internal safety circuit failure.
*6 If another fault occurs at the same time as E.SAF, the other fault can be displayed.
*7 If another warning occurs at the same time as SA, the other warning can be displayed.

For more details, refer to the Safety stop function instruction manual (BCN-A23228-001). (Find a PDF copy of this manual in the CD-ROM enclosed with the product.

2.7 Communication connectors and terminals

2.7.1 PU connector

◆Mounting the operation panel or the parameter unit on the enclosure surface

• Having an operation panel or a parameter unit on the enclosure surface is convenient. With a connection cable, the operation panel or the parameter unit can be mounted to the enclosure surface and connected to the inverter.
Use the option FR-CB2[ ], or connectors and cables available on the market.
(To mount the operation panel, the optional connector (FR-ADP) is required.)
Securely insert one end of the connection cable until the stoppers are fixed.

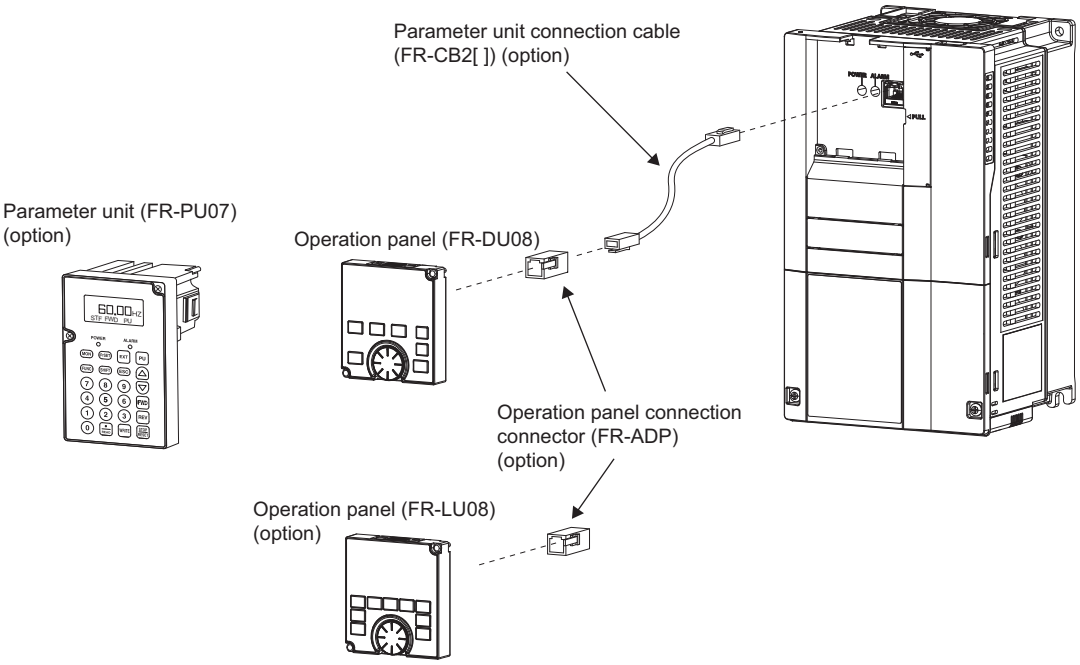

NOTE

• Refer to the following table when fabricating the cable on the user side. Keep the total cable length within 20 m.
• Commercially available products (as of November 2013)

Name	Model	Manufacturer
Communication cable	SGLPEV-T (Cat5e/300 m) 24AWG × 4P	Mitsubishi Cable Industries, Ltd.
RJ-45 connector	5-554720-3	Tyco Electronics

◆Communication operation

• Using the PU connector enables communication operation from a personal computer, etc. When the PU connector is connected with a personal, FA or other computer by a communication cable, a user program can run to monitor the inverter or read and write parameters.
Communication can be performed with the Mitsubishi inverter protocol (computer link operation).
For the details, refer to page 441.

2.7.2 USB connector

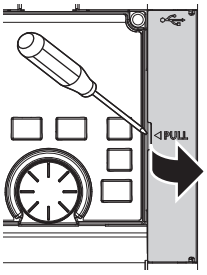

Place a flathead screwdriver, etc. in a slot and push up the cover to open.

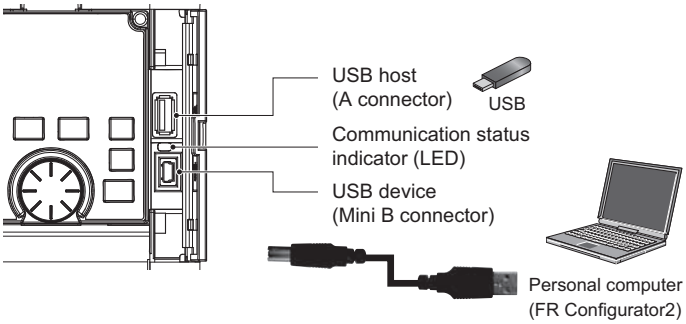

◆USB host communication

Interface		Conforms to USB1.1
Transmission speed		12 Mbps
Wiring length		Maximum 5 m
Connector		USB A connector (receptacle)
Compatible USB memory	**Format**	FAT32
	Capacity	1 GB or more (used in the recorder mode of the trace function)
	Encryption function	Not available

- Different inverter data can be saved in a USB memory device.
  The USB host communication enables the following functions.

Function	Description	Refer to page
Parameter copy	• Copies the parameter setting from the inverter to the USB memory device. A maximum of 99 parameter setting files can be saved in a USB memory device. • The parameter setting data copied in the USB memory device can be copied to other inverters. This function is useful in backing up the parameter setting or for sharing the parameter setting among multiple inverters. • The parameter setting file can be copied onto a personal computer from the USB memory device and edited using FR Configurator2.	524
Trace	• The monitored data and output status of the signals can be saved in a USB memory device. • The saved data can be imported to FR Configurator2 to diagnose the operating status of the inverter.	433
PLC function data copy	• This function copies the PLC function project data to a USB memory device when the PLC function is used. • The PLC function project data copied in the USB memory device can be copied to other inverters. • This function is useful in backing up the parameter setting and for allowing multiple inverters to operate by the same sequence programs.	431

- When the inverter recognizes the USB memory device without any problem, USb.-A is briefly displayed on the operation panel.
- When the USB memory device is removed, USb.- is briefly displayed on the operation panel.
- The operating status of the USB host can be checked on the LED display of the inverter.

LED display status	Operating status
OFF	No USB connection.
ON	The communication is established between the inverter and the USB device.
Flickering rapidly	The USB memory device is being accessed. (Do not remove the USB memory device.)
Flickering slowly	Error in the USB connection.

- When a device such as a USB battery charger is connected to the USB connector and an excessive current (500 mA or more) flows, USB host error UF (UF warning) is displayed on the operation panel.
- When the UF warning appears, the USB error can be canceled by removing the USB device and setting **Pr.1049** = "1". (The UF warning can also be canceled by resetting the inverter power or resetting with the RES signal.)

NOTE

- Do not connect devices other than a USB memory device to the inverter.
- If a USB device is connected to the inverter via a USB hub, the inverter cannot recognize the USB memory device properly.

◆USB device communication

The inverter can be connected to a personal computer with a USB (Ver. 1.1) cable.
Parameter setting and monitoring can be performed by FR Configurator2.

Interface	Conforms to USB1.1
Transmission speed	12 Mbps
Wiring length	Maximum 5 m
Connector	USB mini B connector (receptacle)
Power supply	Self-powered

NOTE

- For the details of FR Configurator2, refer to the Instruction Manual of FR Configurator2.

2.7.3 RS-485 terminal block

◆Communication operation

Conforming standard	EIA-485 (RS-485)
Transmission format	Multidrop link
Communication speed	maximum 115200 bps
Overall length	500 m
Connection cable	Twisted pair cable (4 pairs)

The RS-485 terminals enable communication operation from a personal computer, etc. When the PU connector is connected with a personal, FA or other computer by a communication cable, a user program can run to monitor the inverter or read and write parameters.
Communication can be performed with the Mitsubishi inverter protocol (computer link operation) and Modbus-RTU protocol.
For the details, refer to page 443.

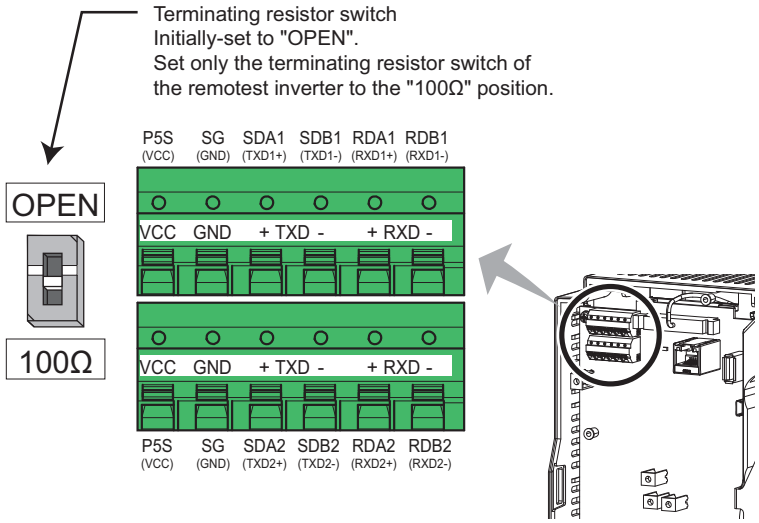

2.8 Connection of stand-alone option units

The inverter accepts a variety of stand-alone option units as required.
Incorrect connection will cause inverter damage or accident. Connect and operate the option unit carefully in accordance with the corresponding option unit manual.

2.8.1 Connection of the brake unit (FR-BU2)

Connect the brake unit (FR-BU2(H)) as shown below to improve the braking capability during deceleration.

◆Connection example with the GRZG type discharging resistor

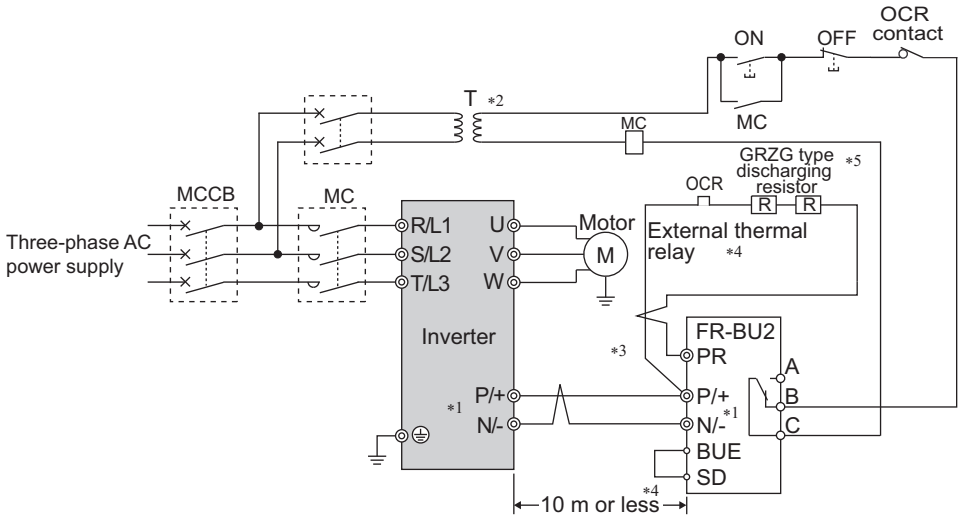

*1 When wiring, make sure to match the terminal symbol (P/+, N/-) at the inverter side and at the brake unit (FR-BU2) side. (Incorrect connection will damage the inverter and brake unit.)
*2 When the power supply is 400 V class, install a stepdown transformer.
*3 The wiring distance between the inverter and brake unit (FR-BU2), and between the brake unit (FR-BU2) and discharging resistor must be within 5 m. Even when the wires are twisted, the cable length must be within 10 m.
*4 It is recommended to install an external thermal relay to prevent overheat of the discharging resistor.
*5 For the connection method of the discharging resistor, refer to the Instruction Manual of the FR-BU2.

- Recommended external thermal relay

Brake unit	Discharging resistor	Recommended external thermal relay
FR-BU2-1.5K	GZG 300W-50Ω (one)	TH-N20CXHZ 1.3A
FR-BU2-3.7K	GRZG 200-10Ω (three in series)	TH-N20CXHZ 3.6A
FR-BU2-7.5K	GRZG 300-5Ω (four in series)	TH-N20CXHZ 6.6A
FR-BU2-15K	GRZG 400-2Ω (six in series)	TH-N20CXHZ 11A
FR-BU2-H7.5K	GRZG 200-10Ω (six in series)	TH-N20CXHZ 3.6A
FR-BU2-H15K	GRZG 300-5Ω (eight in series)	TH-N20CXHZ 6.6A
FR-BU2-H30K	GRZG 400-2Ω (twelve in series)	TH-N20CXHZ 11A

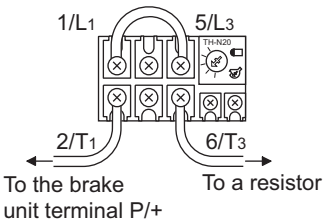

NOTE

- Set "1" in **Pr.0 Brake mode selection** of the FR-BU2 to use a GRZG type discharging resistor.
- Do not remove the jumper across terminals P/+ and P1 except when connecting a DC reactor (FR-HEL).

◆Connection example with the FR-BR-(H) resistor unit

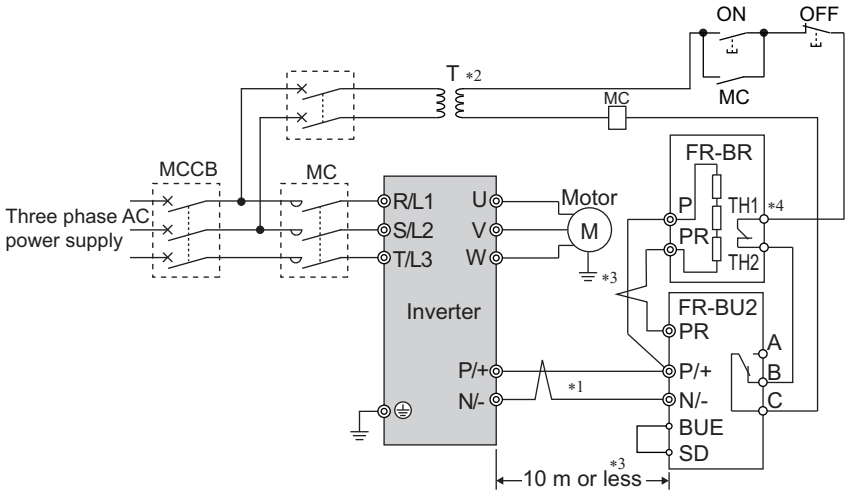

*1 When wiring, make sure to match the terminal symbol (P/+, N/-) at the inverter side and at the brake unit (FR-BU2) side. (Incorrect connection will damage the inverter and brake unit.)

*2 When the power supply is 400 V class, install a stepdown transformer.

*3 The wiring distance between the inverter and brake unit (FR-BU2), and between the brake unit (FR-BU2) and resistor unit (FR-BR) must be within 5 m. Even when the wire is twisted, the cable length must be within 10 m.

*4 The contact between TH1 and TH2 is closed in the normal status and is open at a fault.

NOTE

• Do not remove the jumper across terminals P/+ and P1 except when connecting a DC reactor (FR-HEL).

◆Connection example with the MT-BR5 type resistor unit

After wiring securely, set **Pr.30 Regenerative function selection** = "1".

Set **Pr.0 Brake mode selection** = "2" in the brake unit FR-BU2.

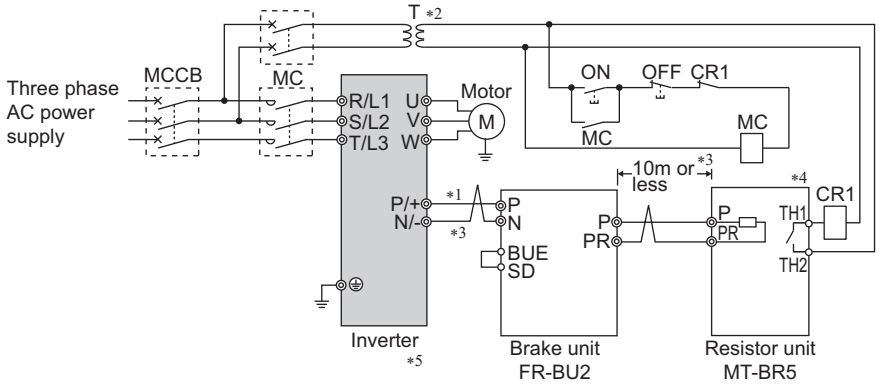

*1 When wiring, make sure to match the terminal symbol (P/+, N/-) at the inverter side and at the brake unit (FR-BU2) side. (Incorrect connection will damage the inverter and brake unit.)

*2 When the power supply is 400 V class, install a stepdown transformer.

*3 The wiring distance between the inverter and brake unit (FR-BU2), and between the brake unit (FR-BU2) and resistor unit (MT-BR5) must be within 5 m. Even when the wire is twisted, the cable length must be within 10 m.

*4 The contact between TH1 and TH2 is open in the normal status and is closed at a fault.

*5 The CN8 connector used with the MT-BU5 type brake unit is not used.

NOTE

• The stall prevention (overvoltage), oL, does not occur while **Pr.30 Regenerative function selection** = "1". (Refer to page 508.)

2.8.2 Connection of the brake unit (FR-BU)

Connect the brake unit (FR-BU2(H)) as shown below to improve the braking capability during deceleration.
The FR-BU is compatible with FR-F820-02330(55K) or lower and FR-F840-01160(55K) and lower.

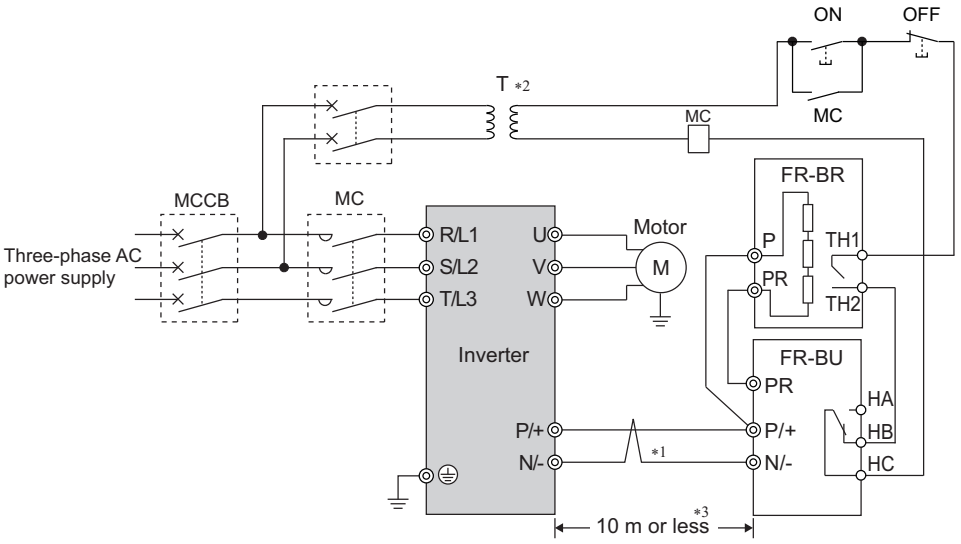

*1 When wiring, make sure to match the terminal symbol (P/+, N/-) at the inverter side and at the brake unit (FR-BU(H)) side. (Incorrect connection will damage the inverter.)
*2 When the power supply is 400 V class, install a stepdown transformer.
*3 The wiring distance between the inverter and brake unit (FR-BU2), and between the brake unit (FR-BU2) and discharging resistor must be within 5 m. Even when the cable is twisted, the wiring length must be within 10 m.

NOTE

- If the transistors in the brake unit should becomes faulty, the resistor will overheat. Install a magnetic contactor on the inverter's input side and configure a circuit that shut off the current in case of a fault.
- Do not remove the jumper across terminals P/+ and P1 except when connecting a DC reactor (FR-HEL).

2.8.3 Connection of the brake unit (BU type)

Connect the brake unit (BU type) correctly as shown below. Incorrect connection will damage the inverter. Remove the jumpers across terminals HB and PC and terminals TB and HC of the brake unit and fit one across terminals PC and TB.
The BU type is compatible with FR-F820-02330(55K) or lower and FR-F840-01160(55K) and lower.

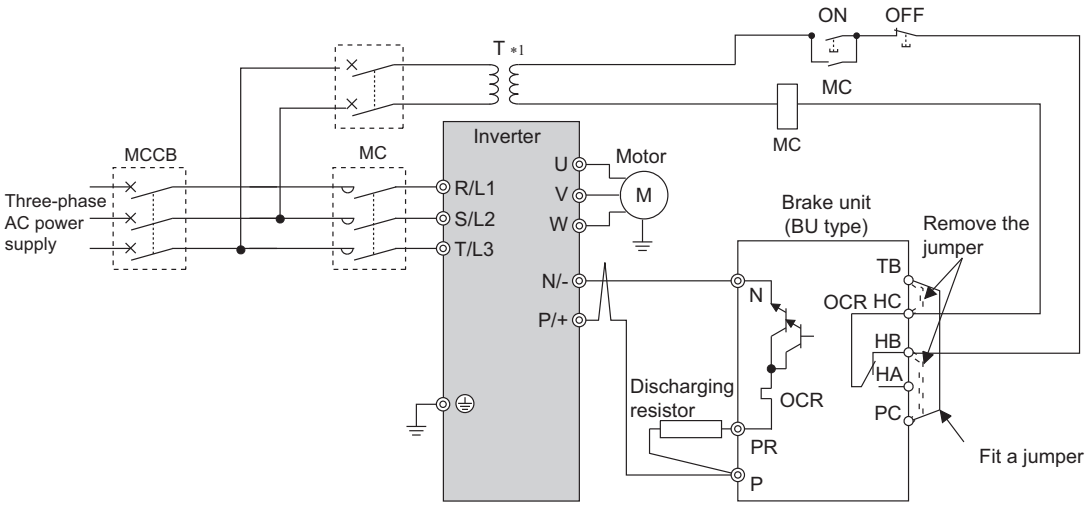

*1 When the power supply is 400 V class, install a stepdown transformer.

NOTE

- The wiring distance between the inverter and brake unit (BU type), and between the brake unit (BU type) and discharging resistor must be within 2 m. Even when the cable is twisted, the wiring length must be within 5 m.
- If the transistors in the brake unit should becomes faulty, the resistor will overheat and result in a fire. Install a magnetic contactor on the inverter's input side and configure a circuit that shut off the current in case of a fault.
- Remove the jumper across terminals P/+ and P1 only when connecting a DC reactor (FR-HEL).

2.8.4 Connection of the high power factor converter (FR-HC2)

When connecting the high power factor converter (FR-HC2) to suppress power harmonics, perform wiring securely as shown below. Incorrect connection will damage the high power factor converter and the inverter.

After making sure that the wiring is correct, set "rated motor voltage" in **Pr.19 Base frequency voltage** (under V/F control) or **Pr.83 Rated motor voltage** (under other than V/F control) and "2" in **Pr.30 Regenerative function selection**. (Refer to page 508.)

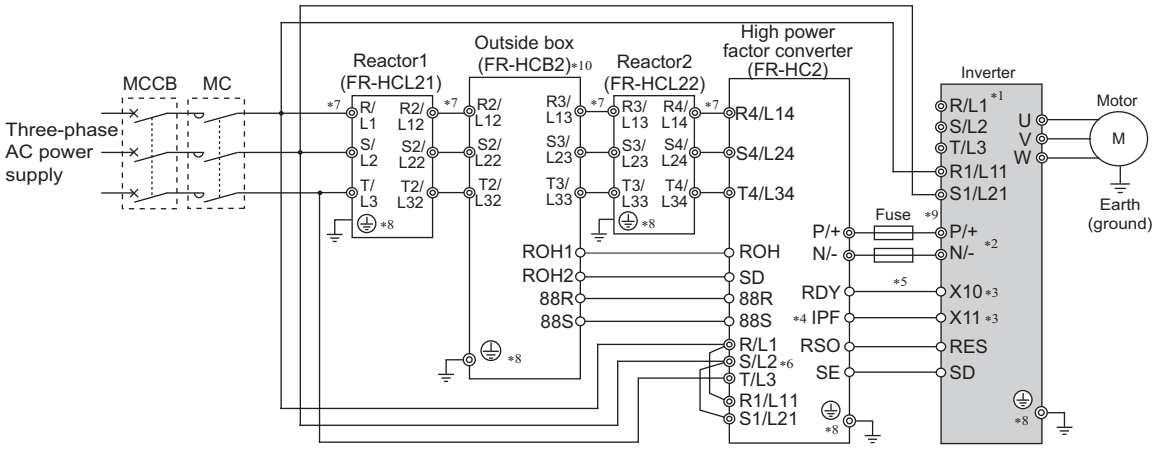

*1 Remove jumpers between terminal R/L1 and R1/L11 as well as between S/L2 and S1/L21, and connect the power supply for the control circuit to terminals R1/L11 and S1/L21. Do not connect anything to power input terminals (R/L1, S/L2, T/L3). Incorrect connection will damage the inverter. (E.OPT (option fault) will occur. (Refer to page 546.)

*2 Do not install an MCCB across the terminals P/+ and N/- (across terminals P and P/+ or across N and N/-). Connecting the opposite polarity of terminals N/- and P/+ will damage the inverter.

*3 Use **Pr.178 to Pr.189 (input terminal function selection)** to assign the terminals used for the X10 (X11) signal. (Refer to page 329.) For RS-485 or any other communication where the start command is only transmitted once, use the X11 signal to save the operation mode at the time of an instantaneous power failure.

*4 Assign the IPF signal to an FR-HC2 terminal. (Refer to the Instruction Manual of FR-HC2.)

*5 Always connect the FR-HC2 terminal RDY to a terminal where the X10 signal or MRS signal is assigned in the inverter. Always connect the FR-HC2 terminal SE to the inverter terminal SD. Not connecting these terminals may damage the FR-HC2.

*6 Always connect the R/L1, S/L2, and T/L3 terminals of FR-HC2 to the power supply. Operating the inverter without connecting them will damage the FR-HC2.

*7 Do not install an MCCB or MC between the reactor 1 terminals (R/L1, S/L2, T/L3) and the FR-HC2 terminals (R4/L14, S4/L24, T4/L34). It will not operate properly.

*8 Securely perform grounding (earthing) by using the grounding (earthing) terminal.

*9 Installation of a fuse is recommended. (Refer to the Instruction Manual of FR-HC2.)

*10 Outside box is not available for FR-HC2-H280K or higher. Connect filter capacitors, inrush current limit resistors, and magnetic contactors. (Refer to the Instruction Manual of FR-HC2.)

NOTE

- The voltage phases of terminals R/L1, S/L2, and T/L3 and the voltage phases of terminals R4/L14, S4/L24, and T4/L34 must be matched.
- The control logic (sink logic/source logic) of the high power factor converter and the inverter must be matched. (Refer to page 50.)
- Do not connect a DC reactor (FR-HEL) to the inverter when FR-HC2 is connected.

2.8.5 Connection of the power regeneration common converter (FR-CV)

When connecting the power regeneration common converter (FR-CV), connect the inverter terminals (P/+, N/-) and the power regeneration common converter (FR-CV) terminals as shown below so that their symbols match with each other.
The FR-CV is applicable to FR-F820-02330(55K) or lower and FR-F840-01160(55K) or lower.
After making sure that the wiring is correct, set "2" in **Pr.30 Regenerative function selection**. (Refer to page 508.)

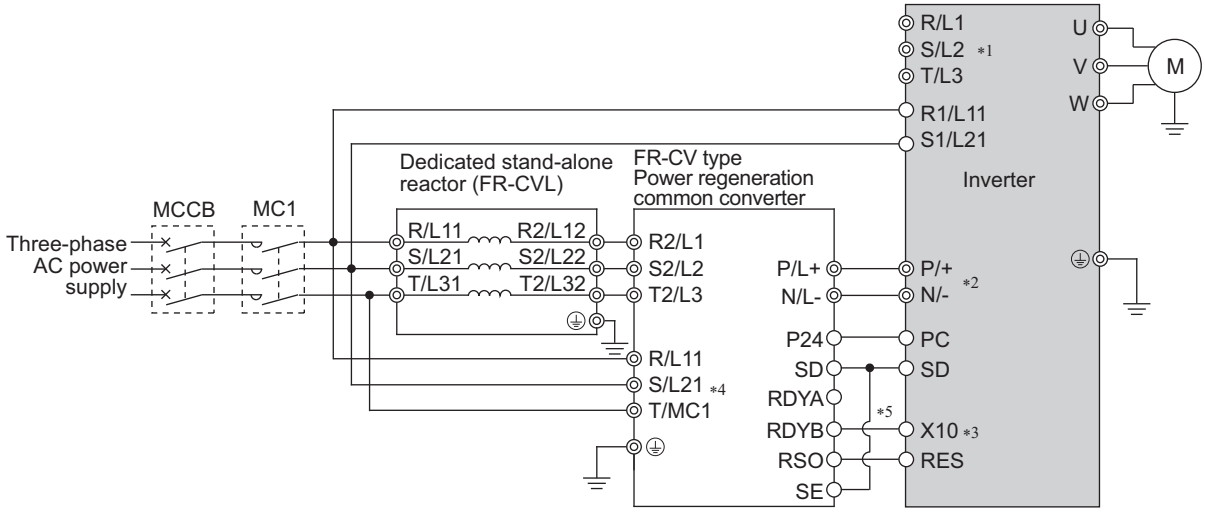

*1 Remove jumpers between terminals R/L1 and R1/L11 as well as between S/L2 and S1/L21, and connect the power supply for the control circuit to terminals R1/L11 and S1/L21. Do not connect anything to power input terminals (R/L1, S/L2, T/L3). Incorrect connection will damage the inverter. (E.OPT (option fault) will occur. (Refer to page 546.)

*2 Do not insert an MCCB between terminals P/+ and N/- (between terminals P/L+ and P/+ or between N/L- and N/-). Connecting the opposite polarity of terminals N/- and P/+ will damage the inverter.

*3 Use **Pr.178 to Pr.189 (input terminal function selection)** to assign the terminals used for the X10 signal. (Refer to page 329.)

*4 Be sure to connect the power supply and terminals R/L11, S/L21, and T/MC1. Operating the inverter without connecting them will damage the power regeneration common converter.

*5 Always connect terminal RDYB of the FR-CV to the inverter terminal where the X10 signal or the MRS signal is assigned to. Always connect terminal SE of the FR-CV to the inverter terminal SD. Not connecting these terminals may damage the FR-CV.

NOTE

- The voltage phases of terminals R/L11, S/L21, and T/MC1 and the voltage phases of terminals R2/L1, S2/L2, and T2/L3 must be matched.
- Use the sink logic (factory setting) when the FR-CV is connected. It cannot be connected when the source logic is selected.
- Do not connect a DC reactor (FR-HEL) to the inverter when FR-CV is connected.

2.8.6 Connection of the power regeneration converter (MT-RC)

When connecting the power regeneration converter (MT-RC), perform wiring securely as shown below. Incorrect connection will damage the power regeneration converter and the inverter. The MT-RC is applicable to FR-F840-01800(75K) or higher. After making sure that the wiring is correct, set "1" in **Pr.30 Regenerative function selection**.

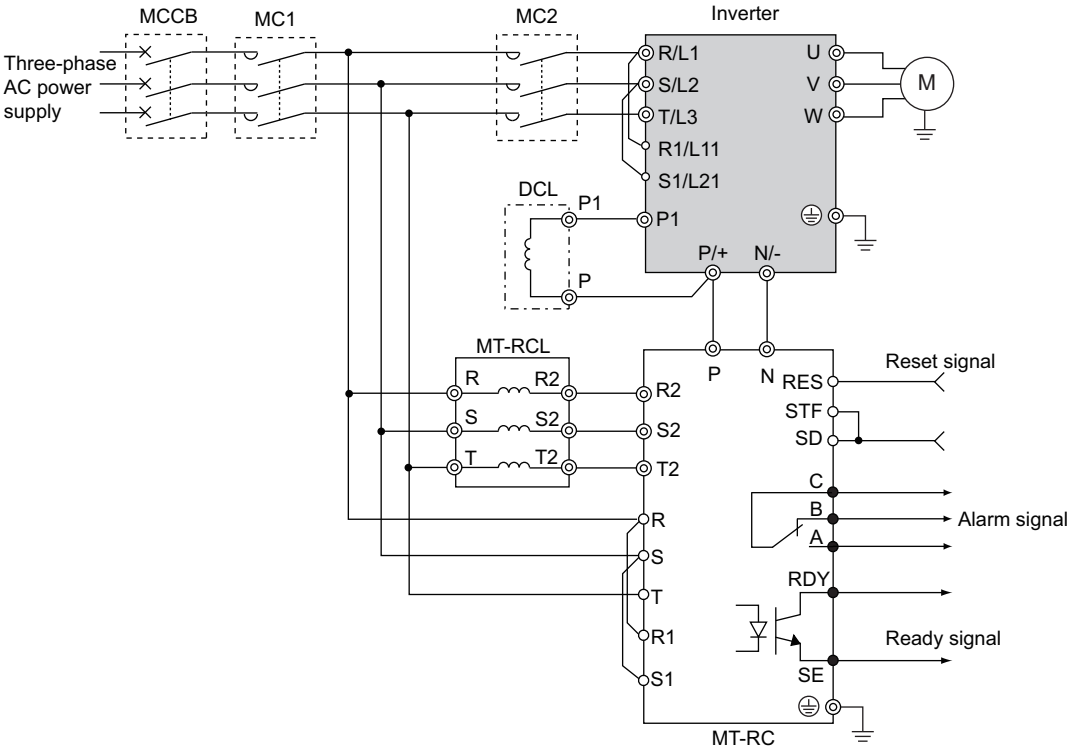

NOTE

- When using the inverter with the MT-RC, install a magnetic contactor (MC) at the input side of the inverter so that power is supplied to the inverter after 1 s or more has elapsed after powering ON the MT-RC. When power is supplied to the inverter prior to the MT-RC, the inverter and the MT-RC may be damaged or the MCCB may trip or be damaged.
- When connecting the power coordination reactor and others, refer to Instruction Manual of the MT-RC for precautions.

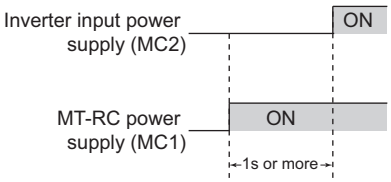

2.8.7 Connection of the DC reactor (FR-HEL)

- Keep the surrounding air temperature within the permissible range (-10°C to +50°C). Keep enough clearance around the reactor because it heats up. (Take 10 cm or more clearance on top and bottom and 5 cm or more on left and right regardless of the installation direction.)

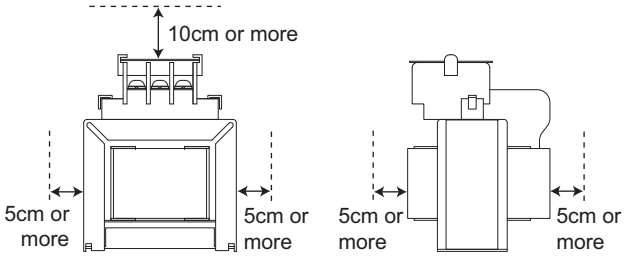

- When using the DC reactor (FR-HEL), connect it across terminals P/+ and P1.
  For the FR-F820-02330(55K) or lower and FR-F840-01160(55K) or lower, the jumper connected across terminals P/+ and P1 must be removed. Otherwise, the reactor will not be effective.

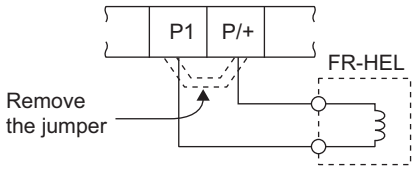

- Select a DC reactor according to the applied motor capacity. (Refer to page 578.) For the FR-F820-03160(75K) or higher and the FR-F840-01800(75K) or higher, always connect a DC reactor.
- Since the DC reactor (FR-HEL) is electrically connected to the enclosure through mounting screws, the DC reactor is earthed (grounded) by being securely mounted to the enclosure. However, if the DC reactor is not earthed (grounded) securely enough, an earthing (grounding) cable may be used.
  When using an earthing (grounding) cable for FR-HEL-(H)55K or lower, wire the cable to the installation hole where varnish is removed. For FR-HEL-(H)75K or higher, use an earth (ground) terminal to perform earthing (grounding). (Refer to the Instruction Manual of the FR-HEL.)

NOTE

- The wiring distance must be within 5 m.
- As a reference, the cable gauge for the connection must be equal to or larger than that of the power supply cables (R/L1, S/L2, T/L3) and the earthing (grounding) cable. (Refer to page 41.)

MEMO

3 PRECAUTIONS FOR USE OF THE INVERTER

This chapter explains the precautions for use of this product.
Always read the instructions before using the equipment.
For the "PRECAUTIONS FOR USE OF THE INVERTER" of the separated converter type, refer to the FR-F802 (Separated Converter Type) Instruction Manual (Hardware) [IB-0600550ENG].

3.1 Electro-magnetic interference (EMI) and leakage currents ..72
3.2 Power supply harmonics 77
3.3 Installation of a reactor 80
3.4 Power-OFF and magnetic contactor (MC) 81
3.5 Countermeasures against deterioration of the 400 V class motor insulation.....82
3.6 Checklist before starting operation 83
3.7 Failsafe system which uses the inverter 85

3.1 Electro-magnetic interference (EMI) and leakage currents

3.1.1 Leakage currents and countermeasures

Capacitances exist between the inverter I/O cables, other cables and earth and in the motor, through which a leakage current flows. Since its value depends on the static capacitances, carrier frequency, etc., low acoustic noise operation at the increased carrier frequency of the inverter will increase the leakage current. Therefore, take the following countermeasures. Select the earth leakage current breaker according to its rated sensitivity current, independently of the carrier frequency setting.

◆To-earth (ground) leakage currents

Leakage currents may flow not only into the inverter's own line but also into the other lines through the earthing (grounding) cable, etc. These leakage currents may operate earth leakage circuit breakers and earth leakage relays unnecessarily.

●Suppression technique

- If the carrier frequency setting is high, decrease the **Pr.72 PWM frequency selection** setting.
  Note that motor noise increases. Selecting **Pr.240 Soft-PWM operation selection** makes the sound inoffensive.
- By using earth leakage circuit breakers designed for harmonic and surge suppression in the inverter's own line and other line, operation can be performed with the carrier frequency kept high (with low noise).

●To-earth (ground) leakage currents

- Take caution as long wiring will increase the leakage current. Decreasing the carrier frequency of the inverter reduces the leakage current.
- Increasing the motor capacity increases the leakage current. The leakage current of the 400 V class is larger than that of the 200 V class.

◆Line-to-line leakage currents

Harmonics of leakage currents flowing in static capacitances between the inverter output cables may operate the external thermal relay unnecessarily. When the wiring length is long (50 m or more) for the 400 V class small-capacity models (FR-F840-00170(7.5K) or lower), the external thermal relay is likely to operate unnecessarily because the ratio of the leakage current to the rated motor current increases.

●Line-to-line leakage current example (200 V class)

Motor capacity (kW)	Rated motor current (A)	Leakage current (mA) *1	
		Wiring length 50 m	Wiring length 100 m
0.4	1.8	310	500
0.75	3.2	340	530
1.5	5.8	370	560
2.2	8.1	400	590
3.7	12.8	440	630
5.5	19.4	490	680
7.5	25.6	535	725

- Motor: SF-JR 4P
- Carrier frequency: 14.5 kHz
- Cable: 2 mm^2, 4 cores
- Cabtyre cable

*1 The leakage currents of the 400 V class are about twice as large.

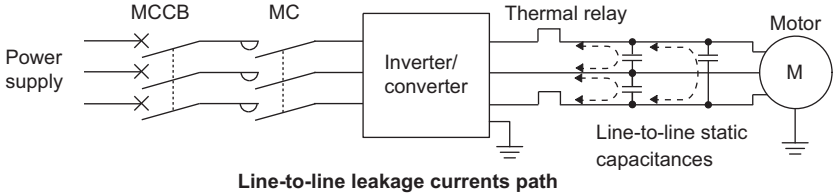

Line-to-line leakage currents path

●Countermeasures

- Use **Pr.9 Electronic thermal O/L relay**.
- If the carrier frequency setting is high, decrease the **Pr.72 PWM frequency selection** setting.
  Note that motor noise increases. Selecting **Pr.240 Soft-PWM operation selection** makes the sound inoffensive.
  To ensure that the motor is protected against line-to-line leakage currents, it is recommended to use a temperature sensor to directly detect motor temperature.

●Installation and selection of the molded case circuit breaker

Install a molded case circuit breaker (MCCB) on the power receiving side to protect the wiring at the inverter input side. Select an MCCB according to the inverter input side power factor, which depends on the power supply voltage, output frequency and load. Especially for a completely electromagnetic MCCB, a slightly large capacity must be selected since its operation characteristic varies with harmonic currents. (Check it in the data of the corresponding breaker.) As an earth leakage current breaker, use the Mitsubishi earth leakage current breaker designed for harmonics and surge suppression.

◆Selecting the rated sensitivity current for the earth leakage circuit breaker

When using an earth leakage circuit breaker with the inverter circuit, select its rated sensitivity current as follows, independently of the PWM carrier frequency.

- Breaker designed for harmonic and surge suppression
  Rated sensitivity current
  $I\Delta n \geq 10 \times (Ig1 + Ign + Igi + Ig2 + Igm)$
- Standard breaker
  Rated sensitivity current
  $I\Delta n \geq 10 \times \{Ig1 + Ign + Igi + 3 \times (Ig2 + Igm)\}$

Ig1, Ig2: Leakage currents in wire path during commercial power supply operation

Ign: Leakage current of inverter input side noise filter

Igm: Leakage current of motor during commercial power supply operation

Igi: Leakage current of inverter unit

Example of leakage current of cable path per 1km during the commercial power supply operation when the CV cable is routed in metal conduit (200V 60Hz)

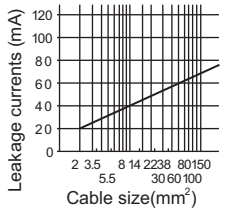

Leakage current example of three-phase induction motor during the commercial power supply operation (200V 60Hz)

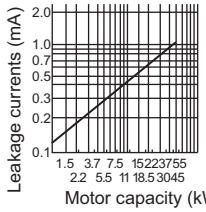

Example of leakage current per 1km during the commercial power supply operation when the CV cable is routed in metal conduit (Three-phase three-wire delta connection 400V60Hz)

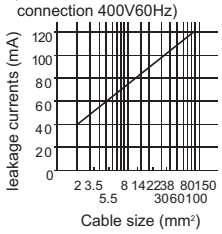

Leakage current example of three-phase induction motor during the commercial power supply operation (Totally-enclosed fan-cooled type motor 400V60Hz)

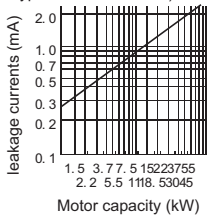

For "人" connection, the amount of leakage current is appox.1/3 of the above value.

<Example>

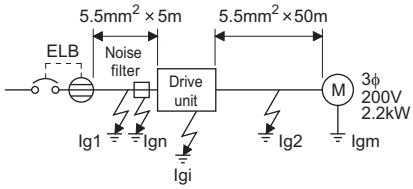

	Breaker designed for harmonic and surge suppression	Standard breaker
Leakage current Ig1 (mA)	$33 \times \frac{5\text{ m}}{1000\text{ m}} = 0.17$	
Leakage current Ign (mA)	0 (without noise filter)	
Leakage current Igi (mA)	1 (without EMC filter) For the leakage current of the inverter, refer to the following table.	
Leakage current Ig2 (mA)	$33 \times \frac{50\text{ m}}{1000\text{ m}} = 1.65$	
Motor leakage current Igm (mA)	0.18	
Total leakage current (mA)	3.00	6.66
Rated sensitivity current (mA) (≥ Ig × 10)	30	100

- Inverter leakage current (with and without EMC filter)
  Input power conditions
  (200 V class: 220 V/60 Hz, 400 V class: 440 V/60 Hz, power supply unbalance within 3%)

	Voltage (V)	EMC filter	
		ON (mA)	OFF (mA)
Phase earthing (grounding)	**200**	22	1
	400	35	2
Earthed-neutral system 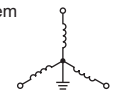	**400**	2	1

NOTE

- Install the earth leakage circuit breaker (ELB) on the input side of the inverter.
- In the 人 connection earthed-neutral system, the sensitivity current is blunt against a ground fault in the inverter output side. Earthing (Grounding) must conform to the requirements of national and local safety regulations and electrical codes. (NEC section 250, IEC 536 class 1 and other applicable standards)
- When the breaker is installed on the output side of the inverter, it may be unnecessarily operated by harmonics even if the effective value is within the rating.
  In this case, do not install the breaker since the eddy current and hysteresis loss will increase, leading to temperature rise.
- The following models are standard breakers: BV-C1, BC-V, NVB, NV-L, NV-G2N, NV-G3NA, NV-2F, earth leakage relay (except NV-ZHA), and NV with AA neutral wire open-phase protection. The other models are designed for harmonic and surge suppression: NV-C/NV-S/MN series, NV30-FA, NV50-FA, BV-C2, earth leakage alarm breaker (NF-Z), NV-ZHA, and NV-H.

3.1.2 Countermeasures against inverter-generated EMI

Some electromagnetic noises enter the inverter to cause the inverter malfunction, and others are radiated by the inverter to cause the peripheral devices to malfunction. Though the inverter is designed to have high immunity performance, it handles low-level signals, so it requires the following basic techniques. Also, since the inverter chops outputs at high carrier frequency, that could generate electromagnetic noises. If these electromagnetic noises cause peripheral devices to malfunction, EMI countermeasures should be taken to suppress noises. These techniques differ slightly depending on EMI paths.

- Basic techniques
  - Do not run the power cables (I/O cables) and signal cables of the inverter in parallel with each other and do not bundle them.
  - Use shielded twisted pair cables for the detector connecting and control signal cables and connect the sheathes of the shielded cables to terminal SD.
  - Ground (Earth) the inverter, motor, etc. at one point.
- Techniques to reduce electromagnetic noises that enter and cause a malfunction of the inverter (EMI countermeasures)
  When devices that generate many electromagnetic noises (which use magnetic contactors, electromagnetic brakes, many relays, for example) are installed near the inverter and the inverter may malfunction due to electromagnetic noises, the following countermeasures must be taken:
  - Provide surge suppressors fordevices that generate many electromagnetic noises to suppress electromagnetic noises.
  - Install data line filters (**page 75**) to signal cables.
  - Ground (Earth) the shields of the detector connection and control signal cables with cable clamp metal.
- Techniques to reduce electromagnetic noises that are radiated by the inverter to cause the peripheral devices to malfunction (EMI countermeasures)
  Inverter-generated noises are largely classified into those radiated by the cables connected to the inverter and inverter main circuits (I/O), those electromagnetically and electrostatically induced to the signal cables of the peripheral devices close to the main circuit power supply, and those transmitted through the power supply cables.

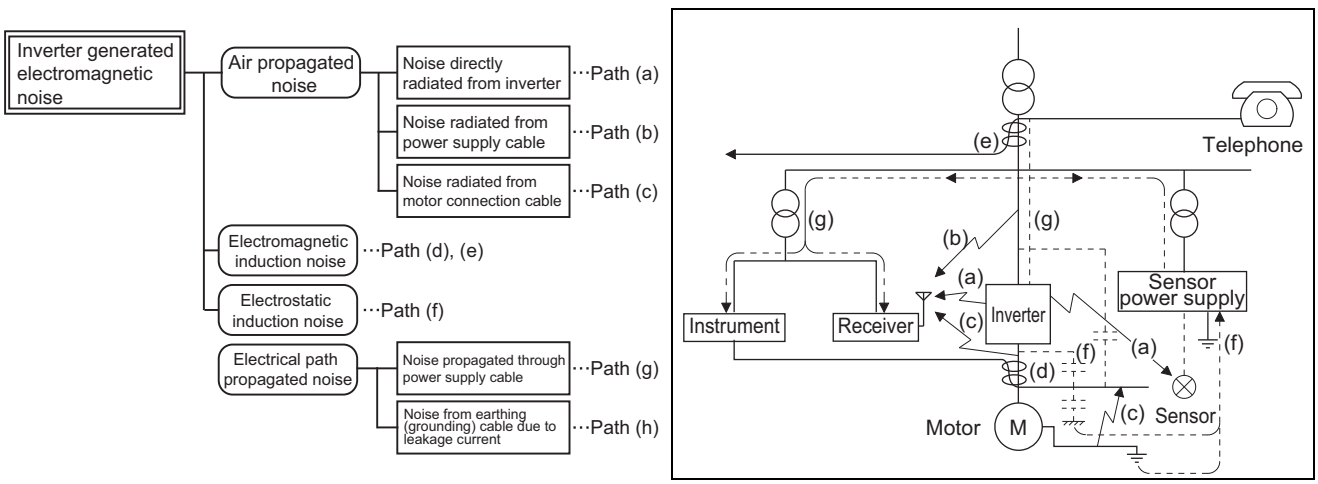

Noise propagation path	Countermeasure
(a)(b)(c)	When devices that handle low-level signals and are liable to malfunction due to electromagnetic noises, e.g. instruments, receivers and sensors, are contained in the enclosure that contains the inverter or when their signal cables are run near the inverter, the devices may malfunction due to by air-propagated electromagnetic noises. The following countermeasures must be taken: • Install easily affected devices as far away as possible from the inverter. • Run easily affected signal cables as far away as possible from the inverter and its I/O cables. • Do not run the signal cables and power cables (inverter I/O cables) in parallel with each other and do not bundle them. • Set the EMC filter ON/OFF connector of the inverter to the ON position. (Refer to page 76.) • Inserting a line noise filter into the output suppresses the radiated noise from the cables. • Use shielded cables as signal cables and power cables and run them in individual metal conduits to produce further effects.
(d)(e)(f)	When the signal cables are run in parallel with or bundled with the power cables, magnetic and static induction noises may be propagated to the signal cables to cause malfunction of the devices and the following countermeasures must be taken: • Install easily affected devices as far away as possible from the inverter. • Run easily affected signal cables as far away as possible from the inverter and its I/O cables. • Do not run the signal cables and power cables (inverter I/O cables) in parallel with each other and do not bundle them. • Use shielded cables as signal cables and power cables and run them in individual metal conduits to produce further effects.
(g)	When the power supplies of the peripheral devices are connected to the power supply of the inverter in the same line, inverter-generated noises may flow back through the power supply cables to cause malfunction of the devices and the following countermeasures must be taken: • Set the EMC filter ON/OFF connector of the inverter to the ON position. (Refer to page 76.) • Install the line noise filter (FR-BLF, FR-BSF01) to the power cables (output cables) of the inverter.
(h)	When a closed loop circuit is formed by connecting the peripheral device wiring to the inverter, leakage currents may flow through the earthing (grounding) cable of the inverter to cause the device to malfunction. In that case, disconnecting the earthing (grounding) cable from the device may stop the malfunction of the device.

●Data line filter

Data line filter is effective as an EMI countermeasure. Provide a data line filter for the detector cable, etc.

<Example> Data line filter : ZCAT3035-1330 (by TDK)

: ESD-SR-250 (by NEC TOKIN)

Impedance (ZCAT3035-1330)

Impedance (Ω)	
10 to 100 MHz	100 to 500 MHz
80	150

The impedance values above are reference values, and not guaranteed values.

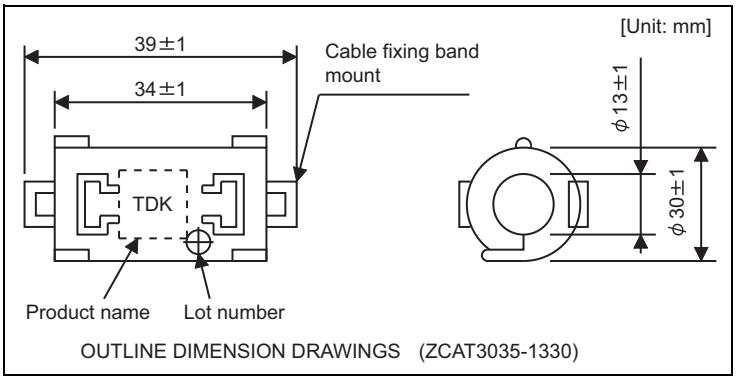

OUTLINE DIMENSION DRAWINGS (ZCAT3035-1330)

●EMI countermeasure example

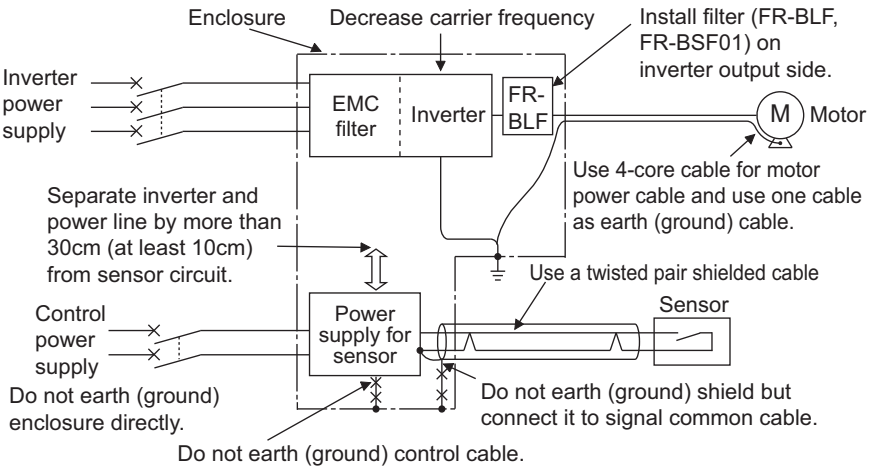

NOTE

- For compliance with the EU EMC Directive, refer to the Instruction Manual (Startup).

3.1.3 Built-in EMC filter

This inverter is equipped with a built-in EMC filter (capacitive filter) and a common mode choke.
These filters are effective in reducing air-propagated noise on the input side of the inverter.
To enable the EMC filter, fit the EMC filter ON/OFF connector to the ON position. The FM type is initially set to "disabled" (OFF), and the CA type to "enabled" (ON).
The input side common mode choke, which is built in the FR-F820-02330(55K) or lower and FR-F840-01160(55K) or lower inverter, is always enabled regardless of the EMC filter ON/OFF connector setting.

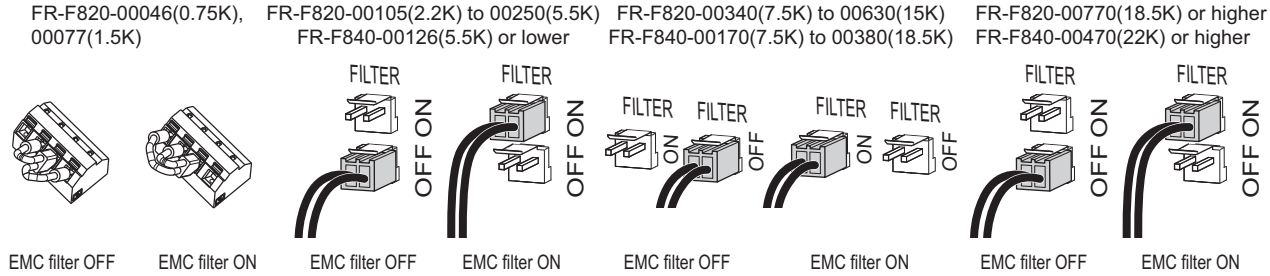

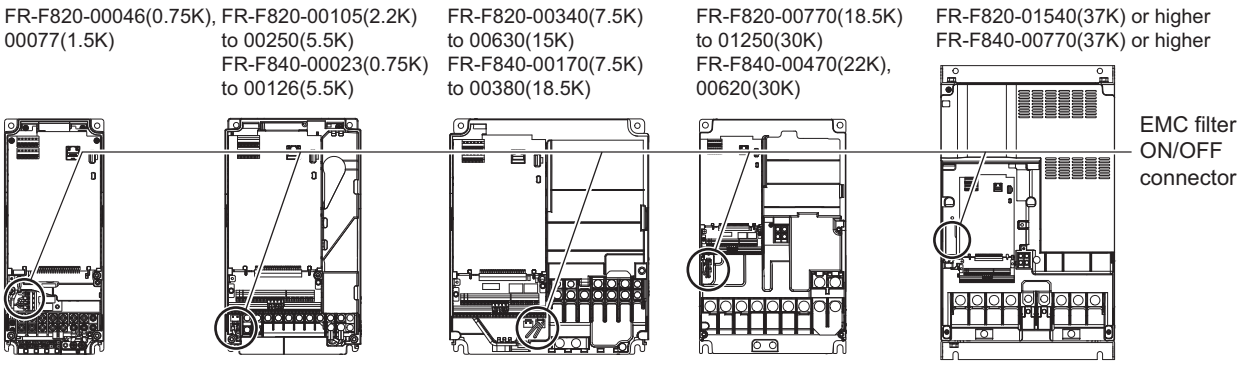

<How to enable or disable the filter>

- Before removing a front cover, check to make sure that the indication of the inverter operation panel is OFF, wait for at least 10 minutes after the power supply has been switched OFF, and check that there is no residual voltage using a tester or the like.
- For FR-F820-00105(2.2K) or higher and FR-F840-00023(0.75K) or higher
  - When disconnecting the connector, push the fixing tab and pull the connector straight without pulling the cable or forcibly pulling the connector with the tab fixed.
    When installing the connector, also engage the fixing tab securely.
    (If it is difficult to disconnect the connector, use a pair of needle-nose pliers, etc.)

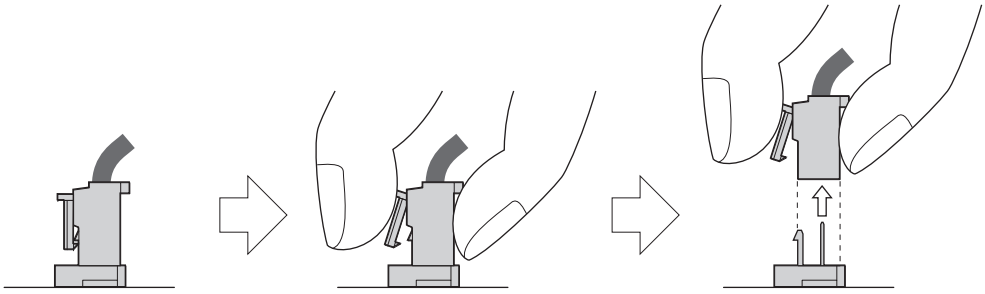

- For FR-F820-00077(1.5K) or lower
  - Remove the control circuit terminal block. (Refer to page 570)
  - Connect the shorting wire to the corresponding terminal to enable or disable the filter. Connect the wire to the terminal in the same way as general wiring of the control circuit terminal block. (Refer to page 52)
  - After switching, reinstall the control circuit terminal block as it was.

NOTE

- Fit the connector or shorting wire to either ON or OFF position.
- Enabling (turning ON) the EMC filter increases leakage current. (Refer to page 73.)

WARNING

- **While power is ON or when the inverter is running, do not open the front cover. Otherwise you may get an electric shock.**

3.2 Power supply harmonics

3.2.1 Power supply harmonics

The inverter may generate power supply harmonics from its converter circuit to affect the power generator, power factor correction capacitor etc. Power supply harmonics are different from noise and leakage currents in source, frequency band and transmission path. Take the following countermeasure suppression techniques.

- The differences between harmonics and noises

Item	Harmonics	Noise
Frequency	Normally 40th to 50th degrees or less (3 kHz or less).	High frequency (several 10 kHz to 1 GHz order).
Location	To-electric channel, power impedance.	To-space, distance, wiring path,
Quantitative understanding	Theoretical calculation possible.	Random occurrence, quantitative grasping difficult.
Generated amount	Nearly proportional to the load capacity.	Changes with the current variation ratio. (Gets larger as switching speed increases.)
Affected equipment immunity	Specified by standards per equipment.	Different depending on maker's equipment specifications.
Countermeasure	Provide a reactor.	Increase distance.

- Countermeasures

The harmonic current generated from the inverter to the input side differs according to various conditions such as the wiring impedance, whether a reactor is used or not, and output frequency and output current on the load side.
For the output frequency and output current, we understand that this should be calculated in the conditions under the rated load at the maximum operating frequency.

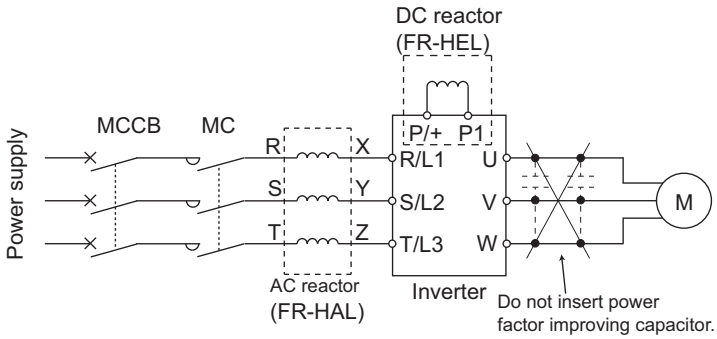

NOTE

- The power factor improving capacitor and surge suppressor on the inverter output side may be overheated or damaged by the harmonic components of the inverter output. Also, since an excessive current flows in the inverter to activate overcurrent protection, do not provide a capacitor and surge suppressor on the inverter output side when the motor is driven by the inverter. For power factor improvement, install a reactor on the inverter input side or in the DC circuit.

3.2.2 Harmonic suppression guidelines

Harmonic currents flow from the inverter to a power receiving point via a power transformer. The Harmonic Suppression Guidelines was established to protect other consumers from these outgoing harmonic currents.
The three-phase 200 V input specifications 3.7 kW or lower were previously covered by "the Harmonic Suppression Guidelines for Household Appliances and General-purpose Products" and other models were covered by "the Harmonic Suppression Guidelines for Consumers Who Receive High Voltage or Special High Voltage". However, the transistorized inverter has been excluded from the target products covered by "the Harmonic Suppression Guidelines for Household Appliances and General-purpose Products" in January 2004 and "the Harmonic Suppression Guideline for Household Appliances and General-purpose Products" was repealed on September 6, 2004.
All capacity and all models of general-purpose inverter used by specific consumers are now covered by "the Harmonic Suppression Guidelines for Consumers Who Receive High Voltage or Special High Voltage" (hereinafter referred to as "the Specific Consumer Guidelines").

- "Specific Consumer Guidelines"
  This guideline sets forth the maximum harmonic currents outgoing from a high-voltage or especially high-voltage receiving consumer who will install, add or renew harmonic generating equipment. If any of the maximum values is exceeded, this guideline requires that consumer to take certain suppression measures.
- Maximum Values of Outgoing Harmonic Currents per 1kW Contract Power

Received power voltage	5th	7th	11th	13th	17th	19th	23rd	Over 23rd
6.6 kV	3.5	2.5	1.6	1.3	1.0	0.9	0.76	0.70
22 kV	1.8	1.3	0.82	0.69	0.53	0.47	0.39	0.36
33 kV	1.2	0.86	0.55	0.46	0.35	0.32	0.26	0.24

◆Application of the specific consumer guidelines

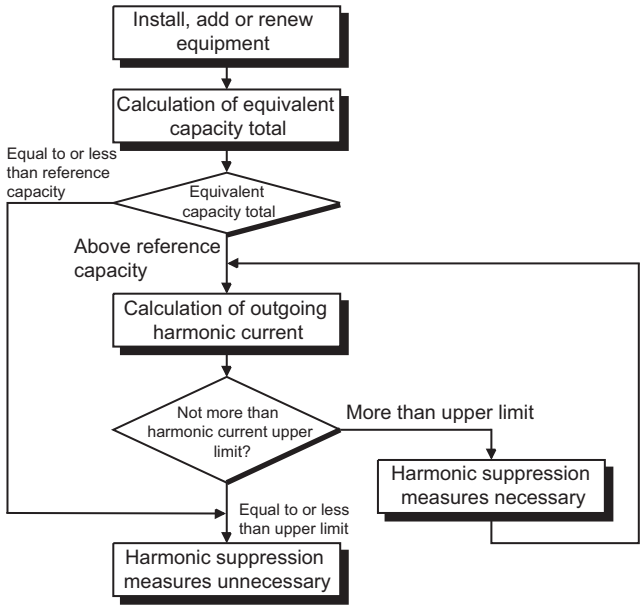

- Conversion factors for FR-F800 series

Classification	Circuit type		Conversion coefficient Ki
3	Three-phase bridge (Capacitor smoothing)	Without reactor	K31 = 3.4
		With reactor (AC side)	K32 = 1.8
		With reactor (DC side)	K33 = 1.8
		With reactors (AC, DC sides)	K34 = 1.4
5	Self-excitation three-phase bridge	When a high power factor converter is used	K5 = 0

• Equivalent Capacity Limits

Received power voltage	Reference capacity
6.6 kV	50 kVA
22/33 kV	300 kVA
66 kV or more	2000 kVA

• Harmonic content (Values of the fundamental current is 100%)

Reactor	5th	7th	11th	13th	17th	19th	23rd	25th
Not used	65	41	8.5	7.7	4.3	3.1	2.6	1.8
Used (AC side)	38	14.5	7.4	3.4	3.2	1.9	1.7	1.3
Used (DC side)	30	13	8.4	5.0	4.7	3.2	3.0	2.2
Used (AC, DC sides)	28	9.1	7.2	4.1	3.2	2.4	1.6	1.4

• Calculation of equivalent capacity P0 of harmonic generating equipment

"Equivalent capacity" is the capacity of a 6-pulse converter converted from the capacity of consumer's harmonic generating equipment and is calculated by the following equation: If the sum of equivalent capacities is higher than the limit in Table 3, harmonics must be calculated with the following procedure:

P0 = ∑ (Ki × Pi) [kVA]
Ki: Conversion coefficient (Refer to Table 2)
Pi: Rated capacity of harmonic generating equipment *1 [kVA]
i: Number indicating the conversion circuit type

*1 Rated capacity: Determined by the capacity of the applied motor and found in Table 5. The rated capacity used here is used to calculate the generated harmonic amount and is different from the power supply capacity required for actual inverter drive.

• Calculation of outgoing harmonic current

Outgoing harmonic current = fundamental wave current (value converted from received power voltage) × operation ratio × harmonic content

- Operation ratio: Operation ratio = actual load factor × operation time ratio during 30 minutes
- Harmonic content: Found in Table 4.

• Rated capacities and outgoing harmonic currents of inverter-driven motors

Applicable motor (kW)	Rated current (A)		Fundamental wave current converted from 6.6 kV (mA)	Rated capacity (kVA)	Outgoing harmonic current converted from 6.6 kV (mA) (No reactor, 100% operation ratio)							
	200 V	400 V			5th	7th	11th	13th	17th	19th	23rd	25th
0.4	1.61	0.81	49	0.57	31.85	20.09	4.165	3.773	2.107	1.519	1.274	0.882
0.75	2.74	1.37	83	0.97	53.95	34.03	7.055	6.391	3.569	2.573	2.158	1.494
1.5	5.50	2.75	167	1.95	108.6	68.47	14.20	12.86	7.181	5.177	4.342	3.006
2.2	7.93	3.96	240	2.81	156.0	98.40	20.40	18.48	10.32	7.440	6.240	4.320
3.7	13.0	6.50	394	4.61	257.1	161.5	33.49	30.34	16.94	12.21	10.24	7.092
5.5	19.1	9.55	579	6.77	376.1	237.4	49.22	44.58	24.90	17.95	15.05	10.42
7.5	25.6	12.8	776	9.07	504.4	318.2	65.96	59.75	33.37	24.06	20.18	13.97
11	36.9	18.5	1121	13.1	728.7	459.6	95.29	86.32	48.20	34.75	29.15	20.18
15	49.8	24.9	1509	17.6	980.9	618.7	128.3	116.2	64.89	46.78	39.24	27.16
18.5	61.4	30.7	1860	21.8	1209	762.6	158.1	143.2	79.98	57.66	48.36	33.48
22	73.1	36.6	2220	25.9	1443	910.2	188.7	170.9	95.46	68.82	57.72	39.96
30	98.0	49.0	2970	34.7	1931	1218	252.5	228.7	127.7	92.07	77.22	53.46
37	121	60.4	3660	42.8	2379	1501	311.1	281.8	157.4	113.5	95.16	65.88
45	147	73.5	4450	52.1	2893	1825	378.3	342.7	191.4	138.0	115.7	80.10
55	180	89.9	5450	63.7	3543	2235	463.3	419.7	234.4	169.0	141.7	98.10

Applicable motor (kW)	Rated current (A)		Fundamental wave current converted from 6.6 kV (mA)	Rated capacity (kVA)	Outgoing harmonic current converted from 6.6 kV (mA) (With a DC reactor, 100% operation ratio)							
	200 V	400 V			5th	7th	11th	13th	17th	19th	23rd	25th
75	245	123	7455	87.2	2237	969	626	373	350	239	224	164
90	293	147	8909	104	2673	1158	748	445	419	285	267	196
110	357	179	10848	127	3254	1410	911	542	510	347	325	239
132	-	216	13091	153	3927	1702	1100	655	615	419	393	288
160	-	258	15636	183	4691	2033	1313	782	735	500	469	344
220	-	355	21515	252	6455	2797	1807	1076	1011	688	645	473
250	-	403	24424	286	7327	3175	2052	1221	1148	782	733	537
280	-	450	27273	319	8182	3545	2291	1364	1282	873	818	600
315	-	506	30667	359	9200	3987	2576	1533	1441	981	920	675
355	-	571	34606	405	10382	4499	2907	1730	1627	1107	1038	761
400	-	643	38970	456	11691	5066	3274	1949	1832	1247	1169	857
450	-	723	43818	512	13146	5696	3681	2191	2060	1402	1315	964
500	-	804	48727	570	14618	6335	4093	2436	2290	1559	1462	1072
560	-	900	54545	638	16364	7091	4582	2727	2564	1746	1636	1200
630	-	1013	61394	718	18418	7981	5157	3070	2886	1965	1842	1351

- Determining if a countermeasure is required

  A countermeasure for harmonics is required if the following condition is satisfied: outgoing harmonic current > maximum value per 1 kW contract power × contract power

- Harmonic suppression techniques

No.	Item	Description
1	Reactor installation (FR-HAL, FR-HEL)	Install an AC reactor (FR-HAL) on the AC side of the inverter or a DC reactor (FR-HEL) on its DC side, or install both to suppress outgoing harmonic currents.
2	High power factor converter (FR-HC2)	This converter trims the current waveform to be a sine waveform by switching the rectifier circuit (converter module) with transistors. Doing so suppresses the generated harmonic amount significantly. Connect it to the DC area of an inverter. Use the high power factor converter (FR-HC2) with the accessories that come as standard.
3	Installation of power factor improving capacitor	When used with a reactor connected in series, the power factor improving correction capacitor can absorb harmonic currents.
4	Transformer multi-phase operation	Use two transformers with a phase angle difference of 30° as in 人-Δ and Δ-Δ combinations to provide an effect corresponding to 12 pulses, reducing low-degree harmonic currents.
5	Passive filter (AC filter)	A capacitor and a reactor are used together to reduce impedances at specific frequencies. Harmonic currents are expected to be absorbed greatly by using this technique.
6	Active filter	This filter detects the current in a circuit generating a harmonic current and generates a harmonic current equivalent to a difference between that current and a fundamental wave current to suppress the harmonic current at the detection point. Harmonic currents are expected to be absorbed greatly by using this technique.

3.3 Installation of a reactor

When the inverter is connected near a large-capacity power transformer (1000 kVA or more) or when a power factor correction capacitor is to be switched over, an excessive peak current may flow in the power input circuit, damaging the converter circuit. To prevent this, always install an AC reactor (FR-HAL), which is available as an option.

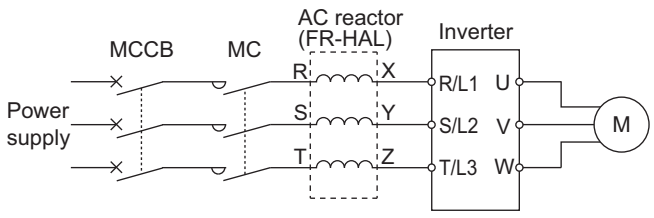

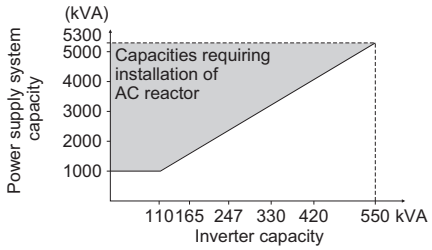

3.4 Power-OFF and magnetic contactor (MC)

◆Inverter input side magnetic contactor (MC)

On the inverter input side, it is recommended to provide an MC for the following purposes:
(Refer to page 20 for selection.)

- To disconnect the inverter from the power supply at activation of a protective function or at malfunctioning of the driving system (emergency stop, etc.).
- To prevent any accident due to an automatic restart at power restoration after an inverter stop made by a power failure.
- To separate the inverter from the power supply to ensure safe maintenance and inspection work.

If using an MC for emergency stop during operation, select an MC regarding the inverter input side current as JEM1038-AC-3 class rated current.

NOTE

- Since repeated inrush currents at power ON will shorten the life of the converter circuit (switching life is about 1,000,000 times), frequent starts and stops of the magnetic contactor must be avoided. Turn ON/OFF the inverter start controlling terminals (STF, STR) to run/stop the inverter.

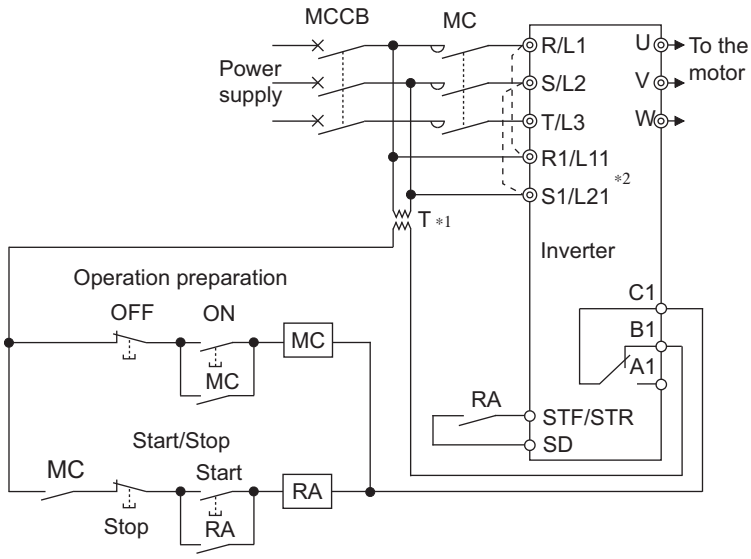

- Inverter start/stop circuit example

As shown on the left, always use the start signal (ON or OFF of STF(STR) signal) to make a start or stop.

*1 When the power supply is 400 V class, install a stepdown transformer.

*2 Connect the power supply terminals R1/L11, S1/L21 of the control circuit to the input side of the MC to hold an alarm signal when the inverter's protective circuit is a ctivated. At this time, remove jumpers across terminals R/L1 and R1/L11 and S/L2 and S1/L21. (Refer to page 55 for removal of the jumper.)

◆Handling of the magnetic contactor on the inverter's output side

Switch the magnetic contactor between the inverter and motor only when both the inverter and motor are at a stop. When the magnetic contactor is turned ON while the inverter is operating, overcurrent protection of the inverter and such will activate. When an MC is provided to switch to a commercial power supply, for example, it is recommended to use the electronic bypass function **Pr.135 to Pr.139** (Refer to page 363). (The commercial power supply operation is not available with PM motors.)

◆Handling of the manual contactor on the inverter's output side

A PM motor is a synchronous motor with high-performance magnets embedded inside. High-voltage is generated at the motor terminals while the motor is running even after the inverter power is turned OFF. In an application where the PM motor is driven by the load even after the inverter is powered OFF, a low-voltage manual contactor must be connected at the inverter's output side.

NOTE

- Before wiring or inspection for a PM motor, confirm that the PM motor is stopped. In an application, such as fan and blower, where the motor is driven by the load, a low-voltage manual contactor must be connected at the inverter's output side, and wiring and inspection must be performed while the contactor is open. Otherwise you may get an electric shock.
- Do not open or close the contactor while the inverter is running (outputting).

3.5 Countermeasures against deterioration of the 400 V class motor insulation

In the PWM type inverter, a surge voltage attributable to wiring constants is generated at the motor terminals. Especially in a 400 V class motor, the surge voltage may deteriorate the insulation. When the 400 V class motor is driven by the inverter, consider the following countermeasures:

• Countermeasures

(With induction motor)

It is recommended to take one of the following countermeasures:

• Rectifying the motor insulation and limiting the PWM carrier frequency according to the wiring length

For the 400 V class motor, use an insulation-enhanced motor.

Specifically,

- Order a "400 V class inverter-driven insulation-enhanced motor".
- For the dedicated motor such as the constant-torque motor and low-vibration motor, use an "inverter-driven dedicated motor".
- Set **Pr.72 PWM frequency selection** as indicated below according to the wiring length.

	Wiring length		
	50 m or shorter	**50 m to 100 m**	**Longer than 100 m**
Pr.72 PWM frequency selection	15 (14.5 kHz) or lower	9 (9 kHz) or lower	4 (4 kHz) or lower

• Suppressing the surge voltage on the inverter side

- For the FR-F840-01160(55K) or lower, connect the surge voltage suppression filter (FR-ASF-H/FR-BMF-H) to the output side.
- For the FR-F840-01800(75K) or higher, connect the sine wave filter (MT-BSL/BSC) to the output side.

(With PM motor)

• When the wiring length exceeds 50 m, set "9" (6 kHz) or less in **Pr.72 PWM frequency selection**.

NOTE

- For the details of **Pr.72 PWM frequency selection**, refer to page 179. (When using an optional sine wave filter (MT-BSL/BSC), set "25" (2.5 kHz) in **Pr.72**.)
- For the details of the surge voltage suppression filter (FR-ASF-H/FR-BMF-H) and the sine wave filter (MT-BSL/BSC), refer to the Instruction Manual of each option.
- A surge voltage suppression filter (FR-ASF-H/FR-BMF-H) can be used under V/F control and Advanced magnetic flux vector control.

  A sine wave filter (MT-BSL/BSC) can be used under V/F control. Do not use the filters under different control modes.

3.6 Checklist before starting operation

The FR-F800 series inverter is a highly reliable product, but incorrect peripheral circuit making or operation/handling method may shorten the product life or damage the product.
Before starting operation, always recheck the following points.

Checkpoint	Countermeasure	Refer to page	Check by user
Crimping terminals are insulated.	Use crimping terminals with insulation sleeves to wire the power supply and the motor.	-	
The wiring between the power supply (R/L1, S/L2, T/L3) and the motor (U, V, W) is correct.	Application of power to the output terminals (U, V, W) of the inverter will damage the inverter. Never perform such wiring.	37	
No wire offcuts are left from the time of wiring.	Wire offcuts can cause an alarm, failure or malfunction. Always keep the inverter clean. When drilling mounting holes in an enclosure etc., take caution not to allow chips and other foreign matter to enter the inverter.	-	
The main circuit cable gauge is correctly selected.	Use an appropriate cable gauge to suppress the voltage drop to 2% or less. If the wiring distance is long between the inverter and motor, the voltage drop in the main circuit will cause the motor torque to decrease especially during the output of a low frequency.	41	
The total wiring length is within the specified length.	Keep the total wiring length within the specified length. In long distance wiring, charging currents due to stray capacitance in the wiring may degrade the fast-response current limit operation or cause the equipment on the inverter's output side to malfunction. Pay attention to the total wiring length.	41	
Countermeasures are taken against EMI.	The input/output (main circuit) of the inverter includes high frequency components, which may interfere with the communication devices (such as AM radios) used near the inverter. In such case, activate the EMC filter (turn ON the EMC filter ON/OFF connector) to minimize interference.	76	
On the inverter's output side, there is no power factor correction capacitor, surge suppressor, or radio noise filter installed.	Such installation will cause the inverter to trip or the capacitor and surge suppressor to be damaged. If any of the above devices is connected, immediately remove it.	-	
When performing an inspection or rewiring on the product that has been energized, the operator has waited long enough after shutting off the power supply.	For a short time after the power-OFF, a high voltage remains in the smoothing capacitor, and it is dangerous. Before performing an inspection or rewiring, wait 10 minutes or longer after the power supply turns OFF, then confirm that the voltage across the main circuit terminals P/+ and N/- of the inverter is low enough using a tester, etc.	-	
The inverter's output side has no short circuit or ground fault occurring.	• A short circuit or ground fault on the inverter's output side may damage the inverter module. • Fully check the insulation resistance of the circuit prior to inverter operation since repeated short circuits caused by peripheral circuit inadequacy or a ground fault caused by wiring inadequacy or reduced motor insulation resistance may damage the inverter module. • Fully check the to-earth (ground) insulation and phase-to-phase insulation of the inverter's output side before power-ON. Especially for an old motor or use in hostile atmosphere, make sure to check the motor insulation resistance, etc.	-	
The circuit is not configured to use the inverter's input-side magnetic contactor to start/stop the inverter frequently.	Since repeated inrush currents at power ON will shorten the life of the converter circuit, frequent starts and stops of the magnetic contactor must be avoided. Turn ON/OFF the inverter's start signals (STF, STR) to run/stop the inverter.	81	
The voltage applied to the inverter I/O signal circuits is within the specifications.	Application of a voltage higher than the permissible voltage to the inverter I/O signal circuits or opposite polarity may damage the I/O devices. Especially check the wiring to prevent the speed setting potentiometer from being connected incorrectly to short circuit the terminals 10E and 5.	46	

Checkpoint	Countermeasure	Refer to page	Check by user
When using the electronic bypass operation, electrical and mechanical interlocks are provided between the electronic bypass contactors MC1 and MC2.	When using a switching circuit as shown below, chattering due to mis-configured sequence or arc generated at switching may allow undesirable current to flow in and damage the inverter. Mis-wiring may also damage the inverter. (The commercial power supply operation is not available with PM motors.) 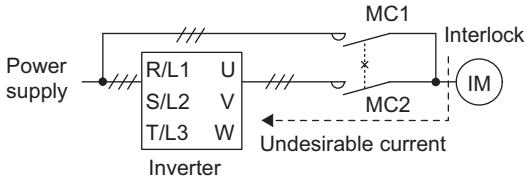 If switching to the commercial power supply operation while a failure such as an output short circuit has occurred between the magnetic contactor MC2 and the motor, the damage may further spread. If a failure has occurred between the MC2 and the motor, a protection circuit such as using the OH signal input must be provided.	363	
A countermeasure is provided for power restoration after a power failure.	If the machine must not be restarted when power is restored after a power failure, provide an MC in the inverter's input side and also make up a sequence which will not switch ON the start signal. If the start signal (start switch) remains ON after a power failure, the inverter will automatically restart as soon as the power is restored.	-	
A magnetic contactor (MC) is installed on the inverter's input side.	On the inverter's input side, connect an MC for the following purposes: • To disconnect the inverter from the power supply at activation of a protective function or at malfunctioning of the driving system (emergency stop, etc.). • To prevent any accident due to an automatic restart at power restoration after an inverter stop made by a power failure. • To separate the inverter from the power supply to ensure safe maintenance and inspection work. If using an MC for emergency stop during operation, select an MC regarding the inverter input side current as JEM1038-AC-3 class rated current.	81	
The magnetic contactor on the inverter's output side is properly handled.	Switch the magnetic contactor between the inverter and motor only when both the inverter and motor are at a stop.	81	
When using a PM motor, a low-voltage manual contactor is installed on the inverter's output side.	When a failure occurs between the MC2 and motor, make sure to provide a protection circuit, such as using the OH signal input. In an application, such as fan and blower, where the motor is driven by the load, a low-voltage manual contactor must be connected at the inverter's output side, and wiring and inspection must be performed while the contactor is open. Otherwise you may get an electric shock.	81	
An EMI countermeasure is provided for the frequency setting signals.	If electromagnetic noise generated from the inverter causes frequency setting signal to fluctuate and the motor rotation speed to be unstable when changing the motor speed with analog signals, the following countermeasures are effective: • Do not run the signal cables and power cables (inverter I/O cables) in parallel with each other and do not bundle them. • Run signal cables as far away as possible from power cables (inverter I/O cables). • Use shielded cables. • Install a ferrite core on the signal cable (Example: ZCAT3035-1330 by TDK).	74	
A countermeasure is provided for an overload operation.	When performing frequent starts/stops by the inverter, rise/fall in the temperature of the transistor element of the inverter will repeat due to a repeated flow of large current, shortening the life from thermal fatigue. Since thermal fatigue is related to the amount of current, the life can be increased by reducing current at locked condition, starting current, etc. Reducing current may extend the service life but may also cause torque shortage, which leads to a start failure. Adding a margin to the current can eliminate such a condition. For an induction motor, use an inverter of a higher capacity (up to two ranks). For a PM motor, use an inverter and PM motor of higher capacities.	-	
The specifications and rating match the system requirements.	Make sure that the specifications and rating match the system requirements.	578	

3.7 Failsafe system which uses the inverter

When a fault is detected by the protective function, the protective function activates and outputs a fault signal. However, a fault signal may not be output at an inverter's fault occurrence when the detection circuit or output circuit fails, etc. Although Mitsubishi assures the best quality products, provide an interlock which uses inverter status output signals to prevent accidents such as damage to the machine when the inverter fails for some reason. Also at the same time consider the system configuration where a failsafe from outside the inverter, without using the inverter, is enabled even if the inverter fails.

◆Interlock method which uses the inverter status output signals

By combining the inverter output signals to provide an interlock as shown below, an inverter failure can be detected.

No.	Interlock method	Check method	Used signals	Refer to page
a	Inverter protective function operation	Operation check of an alarm contact. Circuit error detection by negative logic.	Fault output signal (ALM signal)	293
b	Inverter operating status	Operation ready signal check.	Operation ready signal (RY signal)	292
c	Inverter running status	Logic check of the start signal and running signal.	Start signal (STF signal, STR signal) Running signal (RUN signal)	292, 335
d	Inverter running status	Logic check of the start signal and output current.	Start signal (STF signal, STR signal) Output current detection signal (Y12 signal)	296, 335

(a) Checking by the output of the inverter fault signal

When the inverter's protective function activates and the inverter trips, the fault output signal (ALM signal) is output. (ALM signal is assigned to terminal A1B1C1 in the initial setting).

With this signal, check that the inverter operates properly.

In addition, negative logic can be set. (ON when the inverter is normal, OFF when the fault occurs.)

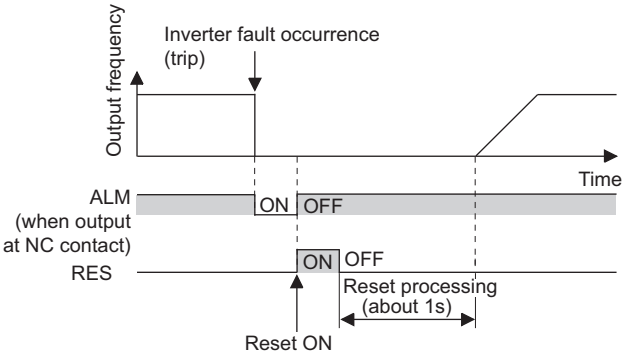

(b) Checking the inverter operating status by the inverter operation ready completion signal

Operation ready signal (RY signal) is output when the inverter power is ON and the inverter becomes operative. Check if the RY signal is output after powering ON the inverter.

(c) Checking the inverter operating status by the start signal input to the inverter and inverter running signal

The inverter running signal (RUN signal) is output when the inverter is running. (RUN signal is assigned to terminal RUN in the initial setting.)

Check if RUN signal is being output while inputting a start signal to the inverter. (STF signal is a forward rotation signal, and STR is a reverse rotation signal.)

Even after the start signal is turned OFF, the RUN signal is kept output until the inverter makes the motor to decelerate and to stop. For the logic check, configure a sequence considering the inverter's deceleration time.

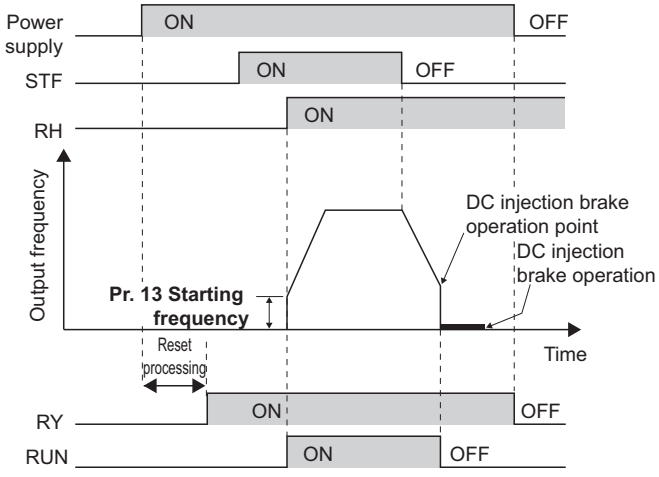

(d) Checking the motor operating status by the start signal input to the inverter and inverter output current detection signal
The output current detection signal (Y12 signal) is output when the inverter operates and currents flows into the motor. Check if Y12 signal is being output while inputting a start signal to the inverter. (STF signal is a forward rotation signal, and STR is a reverse rotation signal.) The Y12 signal is initially set to be output at 120% (FM type) / 110% (CA type) rated inverter current. Adjust the level to around 20% using no load current of the motor as reference with **Pr.150 Output current detection level**.
Like the inverter running signal (RUN signal), even after the start signal is turned OFF, the Y12 signal is kept output until the inverter stops the output to a decelerating motor. For the logic check, configure a sequence considering the inverter's deceleration time.

Output signal	Pr.190 to Pr.196 setting	
	Positive logic	Negative logic
ALM	99	199
RY	11	111
RUN	0	100
Y12	12	112

- When using various signals, assign the functions to **Pr.190 and Pr.196 (output terminal function selection)** referring to the table on the left.

NOTE

- Changing the terminal assignment using **Pr.190 and Pr.196 (output terminal function selection)** may affect the other functions. Set parameters after confirming the function of each terminal.

◆Backup method outside the inverter

Even if the interlock is provided by the inverter status signal, enough failsafe is not ensured depending on the failure status of the inverter itself. For example, if an inverter CPU fails in a system interlocked with the inverter's fault, start, and RUN signals, no fault signal will be output and the RUN signal will be kept ON because the inverter CPU is down.
Provide a speed detector to detect the motor speed and current detector to detect the motor current and consider the backup system such as performing a check as below according to the level of importance of the system.

(a) Start signal and actual operation check
Check the motor running and motor current while the start signal is input to the inverter by comparing the start signal to the inverter and detected speed of the speed detector or detected current of the current detector. Note that the current is flowing through the motor while the motor coasts to stop, even after the inverter's start signal is turned OFF. For the logic check, configure a sequence considering the inverter's deceleration time. In addition, it is recommended to check the three-phase current when using the current detector.

(b) Command speed and actual operation check
Check for a gap between the actual speed and commanded speed by comparing the inverter's speed command and the speed detected by the speed detector.

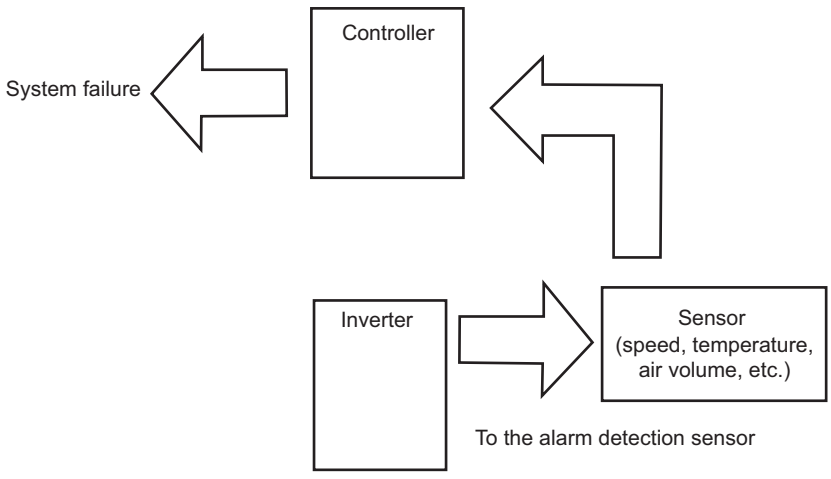

4 BASIC OPERATION

This chapter explains the "BASIC OPERATION" of this product.
Always read the instructions before using the equipment.

4.1 Operation panel (FR-DU08) 88
4.2 Monitoring the inverter status 92
4.3 Easy operation mode setting (easy setting mode) 93
4.4 Frequently-used parameters (simple mode parameters) 95
4.5 Basic operation procedure (PU operation) 97
4.6 Basic operation procedure (External operation) 102
4.7 Basic operation procedure (JOG operation) 109

4.1 Operation panel (FR-DU08)

4.1.1 Components of the operation panel (FR-DU08)

To mount the operation panel (FR-DU08) on the enclosure surface, refer to page 60.

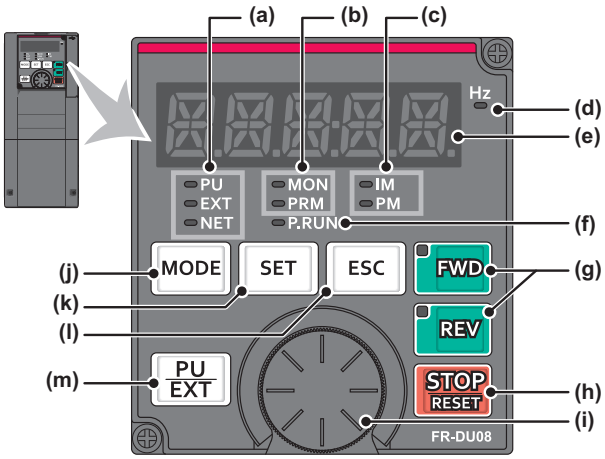

No.	Component	Name	Description
(a)	PU EXT NET	Operation mode indicator	PU: ON to indicate the PU operation mode. EXT: ON to indicate the External operation mode. (ON at power-ON in the initial setting.) NET: ON to indicate the Network operation mode. PU and EXT: ON to indicate the External/PU combined operation mode 1 or 2.
(b)	MON PRM	Operation panel status indicator	MON: ON to indicate the monitoring mode. Quickly flickers twice intermittently while the protective function is activated. Slowly flickers in the display-off mode. PRM: ON to indicate the parameter setting mode.
(c)	IM PM	Control motor indicator	IM: ON to indicate the induction motor control. PM: ON to indicate the PM motor control. The indicator flickers when test operation is selected.
(d)	Hz	Frequency unit indicator	ON to indicate frequency. (Flickers when the set frequency is displayed in the monitor.)
(e)		Monitor (5-digit LED)	Shows the frequency, parameter number, etc. (Using **Pr.52, Pr.774 to Pr.776**, the monitored item can be changed.)
(f)	P.RUN	PLC function indicator	ON to indicate that the sequence program can be executed.
(g)	FWD REV	FWD key, REV key	FWD key: Starts forward rotation. The LED is on during forward operation. REV key: Starts reverse rotation. The LED is on during reverse operation. The LED flickers under the following conditions. • When the frequency command is not given even if the forward/reverse command is given. • When the frequency command is the starting frequency or lower. • When the MRS signal is being input.
(h)	STOP RESET	STOP/RESET key	Stops the operation commands. Resets the inverter when the protection function is activated.
(i)		Setting dial	The setting dial of the Mitsubishi inverters. The setting dial is used to change the frequency and parameter settings. Press the setting dial to perform the following operations: • To display a set frequency in the monitoring mode (the setting can be changed using **Pr.992**.) • To display the present setting during calibration • To display a fault history number in the faults history mode
(j)	MODE	MODE key	Switches to different modes. Switches to the easy setting mode by pressing simultaneously with PU EXT. Holding this key for 2 seconds locks the operation. The key lock is invalid when **Pr.161**="0 (initial setting)". (Refer to page 166.)
(k)	SET	SET key	Enters each setting. If pressed during operation, the monitored item changes. When the initial setting is set: Output frequency → Output current → Output voltage (Using **Pr.52** and **Pr.774-Pr.776**, the monitored item can be changed.)
(l)	ESC	ESC key	Goes back to the previous display. Holding this key for a longer time changes the mode back to the monitor mode.
(m)	PU EXT	PU/EXT key	Switches between the PU operation mode, the PUJOG operation mode, and the External operation mode. Switches to the easy setting mode by pressing simultaneously with MODE. Cancels the PU stop also.

4.1.2 Basic operation of the operation panel

◆Basic operation

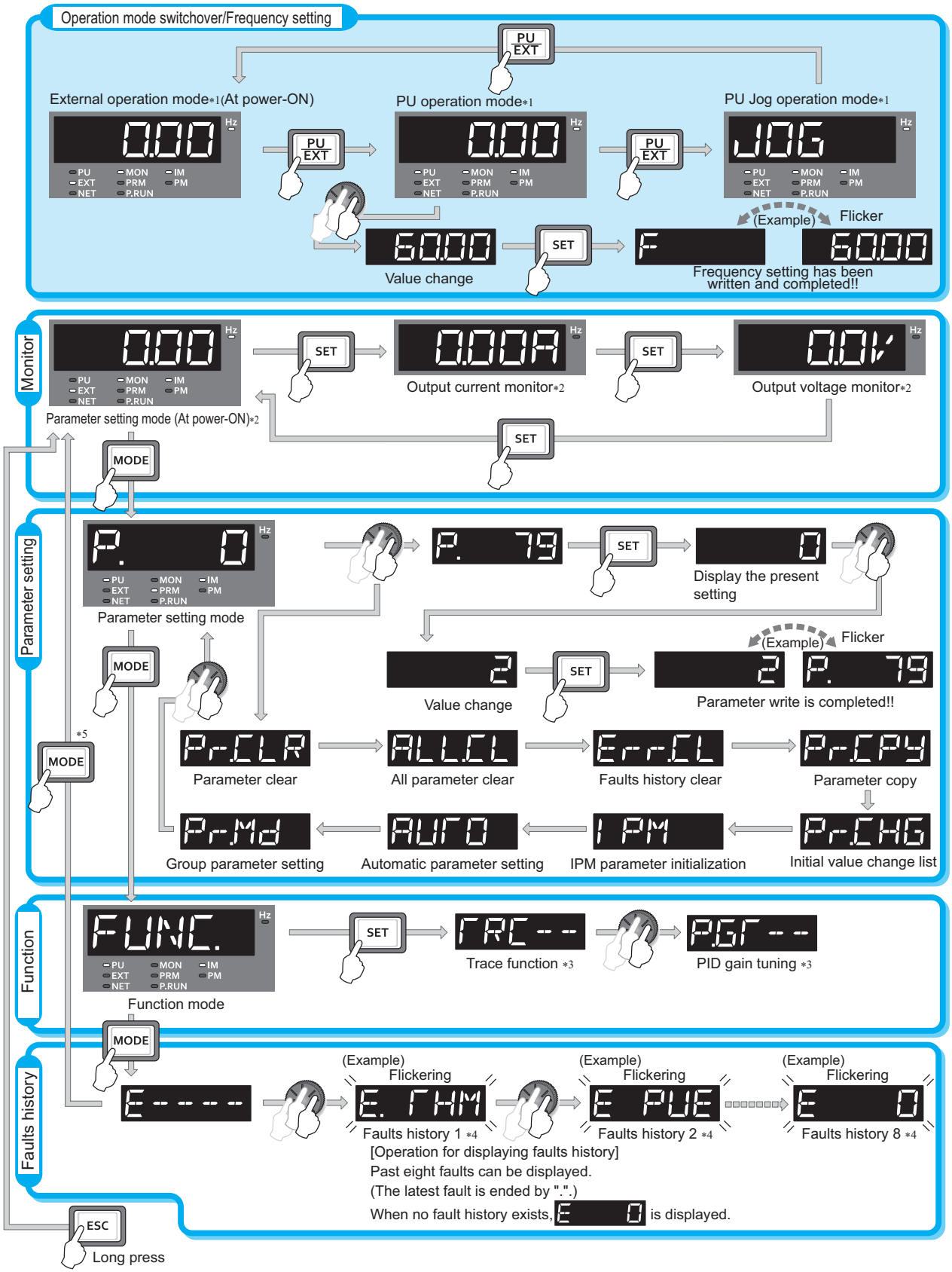

*1 For the details of operation modes, refer to page 200.

*2 Monitored items can be changed.(Refer to page 263.)

*3 For the details of the trace function, refer to page 433. For the details of the PID gain tuning, refer to page 394.

*4 For the details of faults history, refer to page 535.

*5 The USB memory mode will appear if a USB memory device is connected. (Refer to page 61.)

◆Parameter setting mode

In the parameter setting mode, inverter functions (parameters) are set.

The following table explains the indications in the parameter setting mode.

Operation panel indication	Function name	Description	Refer to page
P.	Parameter setting mode	Under this mode, the set value of the displayed parameter number is read or changed.	91
Pr.CLR	Parameter clear	Clears and resets parameter settings to the initial values. Calibration parameters and offline auto tuning parameters are not cleared. The communication parameters are not cleared. For the details of the uncleared parameters, refer to page 597.	520
ALL.CL	Parameter all clear	Clears and resets parameter settings to the initial values. Calibration parameters and the offline auto tuning parameters are also cleared. The communication parameters are not cleared. For the details of the uncleared parameters, refer to page 597.	520
Err.CL	Faults history clear	Deletes the faults history.	531
Pr.CPY	Parameter copy	Copies the parameter settings saved in the inverter to the operation panel. The parameters copied to the operation panel can be also copied to other inverters.	521
Pr.CHG	Initial value change list	Identifies the parameters that have been changed from their initial settings.	527
I PM	IPM initialization	Changes the parameters to the settings required to drive an IPM motor (MM-EFS/MM-THE4) as a batch. Also changes the parameters back to the settings required to drive an induction motor.	149
AUTO	Automatic parameter setting	Changes parameter settings as a batch. The target parameters include communication parameters for the Mitsubishi's human machine interface (GOT) connection and the parameters for the rated frequency settings of 50 Hz/60 Hz.	173
Pr.Md	Group parameter setting	Displays parameter numbers by function groups.	133

4.1.3 Correspondences between digital and actual characters

There are the following correspondences between the actual alphanumeric characters and the digital characters displayed on the operation panel:

0	1	2	3	4	5	6	7	8	9	A	B(b)	C	c	D(d)
0	1	2	3	4	5	6	7	8	9	A	b	C	c	d
E(e)	F(f)	G(g)	H(h)	I(i)	J(j)	K(k)	L(l)	M(m)	N	n	O	o	P(p)	Q(q)
E	F	G	H	I	J	K	L	M	N	n	O	o	P	Q
R	r	S(s)	T(t)	U	u	V	v	W	w	X(x)	Y(y)	Z(z)		
R	r	S	T	U	u	V	v	W	w	X	Y	Z		

4.1.4 Changing the parameter setting value

Changing example **Change the Pr.1 Maximum frequency.**

	Operation
1.	Screen at power-ON The monitor display appears.
2.	Changing the operation mode Press PU/EXT to choose the PU operation mode. [PU] indicator is on.
3.	Parameter setting mode Press MODE to choose the parameter setting mode. (The parameter number read previously appears.)
4.	Selecting the parameter number Turn until "P. 1" (Pr.1) appears. Press SET to read the present set value. " 120.00" (initial value) appears.
5.	Changing the setting value Turn to change the set value to "60.00". Press SET to enter the setting. "60.00" and "P. 1" flicker alternately. •Turn to read another parameter. •Press SET to show the setting again. •Press SET twice to show the next parameter. •Press MODE three times to return to the monitor display of the frequency.

NOTE

- "Er 1" to "Er4" are displayed... Why?
  - "Er 1" appears.....Write disable error
  - "Er2" appears.....Write error during operation
  - "Er3" appears.....Calibration error
  - "Er4" appears.....Mode designation error

  For details, refer to page 535.

POINT

- When **Pr.77 Parameter write selection**="0 (initial setting)", the parameter setting change is only available while the inverter is stopped under the PU operation mode.
  To enable the parameter setting change while the inverter is running or under the operation mode other than PU operation mode, change the **Pr.77** setting. (Refer to page 169)

4.2 Monitoring the inverter status

4.2.1 Monitoring of output current and output voltage

POINT

- Pressing SET in the monitor mode switches the monitored item to output frequency, output current, and then to output voltage.

Operation

1. Press MODE during operation to monitor the output frequency. [Hz] indicator turns ON.
2. Press SET to monitor the output current. This operation is valid during running or stopping under any operation mode. [A] appears.
3. Press SET to monitor the output voltage. [V] appears.

NOTE

- Other monitored items, such as output voltage and set frequency, are also available. Use **Pr.52** to change the setting. (Refer to page 263.)

4.2.2 First monitored item

The first monitored item to be displayed in the monitor mode is selectable.

To set a monitored item as the first monitored item, display a monitored item, and press SET for a while.

Changing example **Set the output current as the first monitored item.**

Operation

1. Select the monitor mode, and select the output current.
2. Press SET for a while (1 s). The output current is set as the first monitored item.
3. When the monitor mode is selected next time, the output current is monitored first.

NOTE

- Use **Pr.774 Operation panel monitor selection 1** to change the monitored item. (Refer to page 263.)

4.2.3 Displaying the set frequency

In the PU operation mode or in the External/PU combined operation mode 1( ) (**Pr.79 Operation mode selection** ="3"), select the monitor mode, and then press the setting dial. The present set frequency is displayed.

NOTE

- Use **Pr.992 Operation panel setting dial push monitor selection** to change the displayed indication. (Refer to page 263.)

4.3 Easy operation mode setting (easy setting mode)

A required combination of a start command and a frequency command can be easily selected using **Pr.79 Operation mode selection**.

Changing example **Operate with the external (STF/STR) start command and frequency command.**

Operation

1. Press PU/EXT and MODE for 0.5 s.

2. Turn until 79 -- -- 3 (External/PU combined operation mode 1) appears. (For other settings, refer to the table below.)

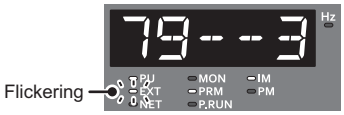

3. Press SET to enter the setting. External/PU combined operation mode 1 (**Pr.79**="3") is set.

Operation panel indication	Operation method		Operation mode
	Start command	Frequency command	
Flickering 79 -- -- 1	FWD, REV	*1	PU operation mode
Flickering 79 -- -- 2	External (STF, STR)	Analog voltage input	External operation mode
Flickering 79 -- -- 3	External (STF, STR)	*1	External/PU combined operation mode 1
Flickering 79 -- -- 4	FWD, REV	Analog voltage input	External/PU combined operation mode 2

*1 To use as a potentiometer, refer to page 166.

NOTE

- Er1 is displayed... Why?
  -**Pr.79** may not be included in the user group set by **Pr.160 User group read selection** ="1".
- Er2 is displayed... Why?

  -Setting cannot be changed during operation.Turn the start command (FWD or REV , STF or STR) OFF.
- If MODE is pressed before pressing SET , the easy setting mode is terminated and the display goes back to the monitor display.If the easy setting mode is terminated while **Pr.79** ="0 (initial value)", the operation mode switches between the PU operation mode and the External operation mode. Check the operation mode.
- Reset by STOP RESET is enabled.
- The priorities of the frequency commands when **Pr.79** = "3" are "Multi-speed operation (RL/RM/RH/REX) > PID control (X14) > terminal 4 analog input (AU) > digital input from the operation panel".

4.4 Frequently-used parameters (simple mode parameters)

Parameters that are frequently used for the FR-F800 series are grouped as simple mode parameters.
When **Pr.160 User group read selection**="9999", only the simple mode parameters are displayed.
This section explains about frequently-used parameters.

4.4.1 Simple mode parameter list

For simple variable-speed operation of the inverter, the initial values of the parameters may be used as they are. Set the necessary parameters to meet the load and operational specifications. Parameter setting, change and check can be performed from the operation panel (FR-DU08).

POINT

- **Pr.160 User group read selection** can narrow down the displayed parameters to only the simple mode parameters. Set **Pr.160 User group read selection** as required. (For the parameter change, refer to page 91.)

Pr.160 setting	Description
9999 (FM type initial value)	Displays only the simple mode parameters.
0 (CA type initial value)	Displays simple mode + extended parameters.
1	Displays parameters registered in the user group.

Pr.	Pr. group	Name	Unit	Initial value *11		Range	Application	Refer to page
				FM	CA			
0	G000	Torque boost	0.1%	6%*1 4%*2 3%*3 2%*4 1.5%*5 1%*6		0 to 30%	Set this parameter to obtain a higher starting torque under V/F control. Also set this when a loaded motor cannot be driven and the warning [OL] occurs, then the inverter trips with [OC1].	496
1	H400	Maximum frequency	0.01 Hz	120 Hz*7 60 Hz*8		0 to 120 Hz	Sets the upper limit for the output frequency.	245
2	H401	Minimum frequency	0.01 Hz	0Hz		0 to 120 Hz	Sets the lower limit for the output frequency.	
3	G001	Base frequency	0.01 Hz	60 Hz	50 Hz	0 to 590 Hz	Set this parameter when the rated motor frequency is 50 Hz. Check the rating plate of the motor.	497
4	D301	Multi-speed setting (high speed)	0.01 Hz	60 Hz	50 Hz	0 to 590 Hz	Pre-sets the speeds that will be switched among by terminals.	99, 104, 222
5	D302	Multi-speed setting (middle speed)	0.01 Hz	30 Hz		0 to 590 Hz		
6	D303	Multi-speed setting (low speed)	0.01 Hz	10 Hz		0 to 590 Hz		
7	F010	Acceleration time	0.1 s	5 s*9 15 s*10		0 to 3600 s	Sets the acceleration time.	187
8	F011	Deceleration time	0.1 s	10 s*9 30 s*10		0 to 3600 s	Sets the deceleration time.	
9	H000 C103	Electronic thermal O/L relay	0.01 A*7 0.1 A*8	Rated inverter current		0 to 500 A*7 0 to 3600 A*8	Protects the motor from heat. Set the rated motor current.	225
79	D000	Operation mode selection	1	0		0 to 4, 6, 7	Select the start and frequency command sources.	200
125	T022	Terminal 2 frequency setting gain frequency	0.01 Hz	60 Hz	50 Hz	0 to 590 Hz	Allows the frequency at the maximum potentiometer setting (5 V in the initial setting) to be changed.	106, 314
126	T042	Terminal 4 frequency setting gain frequency	0.01 Hz	60 Hz	50 Hz	0 to 590 Hz	Allows the frequency at the maximum current input (20 mA in the initial setting) to be changed.	108, 314

Frequently-used parameters (simple mode parameters)

Pr.	Pr. group	Name	Unit	Initial value *11		Range	Application	Refer to page
				FM	CA			
160	E440	User group read selection	1	9999	0	0, 1, 9999	Restricts the parameters that are read by the operation panel and the parameter unit.	177
998	E430	PM parameter initialization	1	0		0, 12, 112, 8009, 8109, 9009, 9109	Selects the PM sensorless vector control and set the parameters that are required to drive an PM motor.	149
999	E431	Automatic parameter setting	1	9999		1, 2, 10, 11, 12, 13, 20, 21, 30, 31, 9999	Changes parameter settings as a batch. The target parameters include communication parameters for the Mitsubishi's human machine interface (GOT) connection and the parameters for the rated frequency settings of 50 Hz/60 Hz.	173

*1 Initial value for the FR-F820-00046(0.75K) or lower and FR-F840-00023(0.75K) or lower.
*2 Initial value for the FR-F820-00077(1.5K) to FR-F820-00167(3.7K) and the FR-F840-00038(1.5K) to FR-F840-00083(3.7K).
*3 Initial value for the FR-F820-00250(5.5K), FR-F820-00340(7.5K), FR-F840-00126(5.5K), and FR-F840-00170(7.5K).
*4 Initial value for the FR-F820-00490(11K) to FR-F820-01540(37K), FR-F840-00250(11K) to FR-F840-00770(37K).
*5 Initial value for the FR-F820-01870(45K), FR-F820-02330(55K), FR-F840-00930(45K), and FR-F840-01160(55K).
*6 Initial value for the FR-F820-03160(75K) or higher and FR-F840-01800(75K) or higher.
*7 For the FR-F820-02330(55K) or lower and FR-F840-01160(55K) or lower.
*8 For the FR-F820-03160(75K) or higher and FR-F840-01800(75K) or higher.
*9 Initial value for the FR-F820-00340(7.5K) or lower and FR-F840-00170(7.5K) or lower.
*10 Initial value for the FR-F820-00490(11K) or higher and FR-F840-00250(11K) or higher.
*11 FM denotes the initial value for the FM type inverter that has the terminal FM, and CA denotes the initial value for the CA type inverter that has the terminal CA.

4.5 Basic operation procedure (PU operation)

POINT

- Where is the frequency command source?
  - The frequency set in the frequency setting mode of the operation panel → Refer to 4.5.1. (Refer to page 97.)
  - The setting dial used as the potentiometer → Refer to 4.5.2. (Refer to page 98.)
  - The ON/OFF switches connected to terminals → Refer to 4.5.3. (Refer to page 99.)
  - Voltage input signals → Refer to 4.5.4. (Refer to page 100.)
  - Current input signals → Refer to 4.5.5. (Refer to page 101.)

4.5.1 Operating at a set frequency (example: operating at 30 Hz)

POINT

- Use the operation panel (FR-DU08) to give a start command and a frequency command. (PU operation)

Operation panel
(FR-DU08)

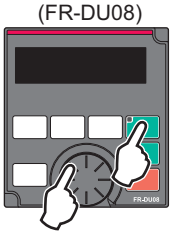

Operation example **Operate at 30 Hz.**

	Operation
1.	Screen at power-ON The monitor display appears.
2.	Changing the operation mode Press PU EXT to choose the PU operation mode. [PU] indicator is on.
3.	Setting the frequency Turn the dial until the target frequency, "30.00" (30.00 Hz), appears. The frequency flickers for about 5 s. While the value is flickering, press SET to enter the frequency. "F" and "30.00" flicker alternately. After about 3 s of flickering, the indication goes back to "0.00" (monitor display). (If SET is not pressed, the indication of the value goes back to "0.00" (0.00 Hz) after about 5 s of flickering.In that case, turn the dial again and set the frequency.)
4.	Start → acceleration → constant speed Press FWD or REV to start running. The frequency value on the indication increases in **Pr.7 Acceleration time,** and "30.00" (30.00 Hz) appears. (To change the set frequency, perform the operation in above step 3. The previously set frequency appears.)
5.	Deceleration → stop Press STOP RESET to stop. The frequency value on the indication decreases in **Pr.8 Deceleration time,** and the motor stops rotating with "0.00" (0.00 Hz) displayed.

NOTE

- To display the set frequency under PU operation mode or External/PU combined operation mode 1 (**Pr.79** = "3"), press . (Refer to page 263.)
- can also be used like a potentiometer to perform operation. (Refer to page 98.)

Parameters referred to

Pr.7 Acceleration time, Pr.8 Deceleration time page 187
Pr.79 Operation mode selection page 200

4.5.2 Using the setting dial like a potentiometer to perform operation

POINT

- Set **Pr.161 Frequency setting/key lock operation selection** ="1" (setting dial potentiometer).

Operation example **Change the frequency from 0 Hz to 60 Hz during operation**

	Operation
1.	Screen at power-ON The monitor display appears.
2.	Changing the operation mode Press PU EXT to choose the PU operation mode. [PU] indicator is on.
3.	Changing the parameter setting Change **Pr.161** setting to "1". (For setting value change, refer to page 91.)
4.	Start Press FWD or REV to start the inverter operation.
5.	Setting the frequency Turn " " until " 60.00 " appears. The set frequency flickers. (The frequency flickers for about 5 s.) SET needs not to be pressed.

NOTE

- If the display changes from flickering "60.00" to "0.00", **Pr.161 Frequency setting/key lock operation selection** may be set to a value other than "1".
- Simply turning will enable frequency setting whether the inverter is running or at a stop.
- The newly-set frequency will be saved as the set frequency in EEPROM after 10 s.
- With the setting dial, the frequency can go up to the setting value of **Pr.1 Maximum frequency**. Check the **Pr.1 Maximum frequency** setting, and adjust the setting according to the application.

Parameters referred to

Pr.1 Maximum frequency page 245
Pr.161 Frequency setting/key lock operation selection page 166

4.5.3 Setting the frequency by switches (multi-speed setting)

POINT

- Use the operation panel (FR-DU08) (FWD or REV) to give a start command.
- Turn ON the RH, RM, or RL signal to give a frequency command. (multi-speed setting)
- Set **Pr.79 Operation mode selection**="4" (External/PU combination operation mode 2).

[Connection diagram]

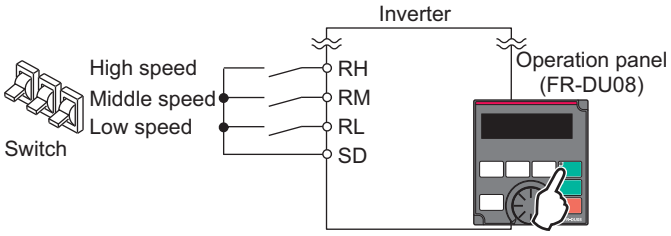

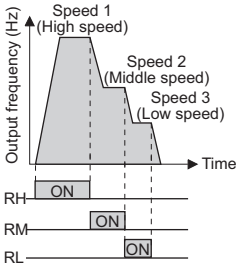

Operation example **Operate at a low-speed (10 Hz).**

Operation

1.	Screen at power-ON The monitor display appears.
2.	Changing the operation mode Set "4" in **Pr.79**. [PU] and [EXT] indicators are on. (For setting value change, refer to page 93.)
3.	Setting the frequency Turn ON the low-speed switch (RL).
4.	Start → acceleration → constant speed Press FWD or REV to start running. The frequency value on the indication increases in **Pr.7 Acceleration time**, and " 10.00 " (10.00 Hz) appears.
5.	Deceleration → stop Press STOP RESET to stop. The frequency value on the indication decreases in **Pr.8 Deceleration time,** and the motor stops rotating with " 0.00 " (0.00 Hz) displayed. Turn OFF the low-speed switch (RL).

NOTE

- The terminal RH is initially set to 60 Hz for the FM type inverter, and to 50 Hz for the CA type inverter. The terminal RM is set to 30 Hz, and the RL is set to 10 Hz. (To change, set **Pr.4, Pr.5, and Pr.6**.)
- In the initial setting, when two or more of multi-speed settings are simultaneously selected, priority is given to the set frequency of the lower signal.
  For example, when RH and RM signals turn ON, RM signal (**Pr.5**) has a higher priority.
- Maximum of 15-speed operation can be performed.

Parameters referred to

Pr.4 to Pr.6 (multi-speed setting) page 222
Pr.7 Acceleration time, Pr.8 Deceleration time page 187
Pr.79 Operation mode selection page 200

4.5.4 Setting the frequency with analog signals (voltage input)

POINT

- Use the operation panel (FR-DU08) (FWD or REV) to give a start command.
- Use the potentiometer (frequency setting potentiometer) to give a frequency command (by connecting it across terminals 2 and 5 (voltage input)).
- Set **Pr.79 Operation mode selection** = "4" (External/PU combination operation mode 2).

[Connection diagram] (The inverter supplies 5 V power to the frequency setting potentiometer (terminal 10).)

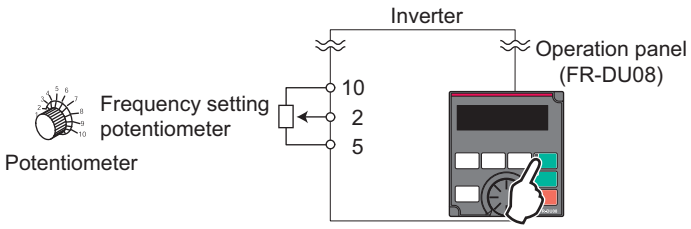

Operation example **Operate at 60 Hz.**

	Operation
1.	Screen at power-ON The monitor display appears.
2.	Changing the operation mode Set "4" in **Pr.79**. [PU] and [EXT] indicators are on. (For setting value change, refer to page 91.)
3.	Start Press FWD or REV. [FWD] or [REV] flickers as no frequency command is given.
4.	Acceleration → constant speed Turn the potentiometer (frequency setting potentiometer) clockwise slowly to full. The frequency value on the indication increases in **Pr.7 Acceleration time**, and "60.00" (60.00 Hz) appears.
5.	Deceleration Turn the potentiometer (frequency setting potentiometer) counterclockwise slowly to full. The frequency value on the indication decreases in **Pr.8 Deceleration time**, and the motor stops rotating with "0.00" (0.00 Hz) displayed. [FWD] or [REV] indicator flickers.
6.	Stop Press STOP RESET. [FWD] or [REV] indicator turns OFF.

NOTE

- To change the frequency (60 Hz) at the maximum voltage input (initial value 5 V), adjust **Pr.125 Terminal 2 frequency setting gain frequency**.
- To change the frequency (0 Hz) at the minimum voltage input (initial value 0 V), adjust the **calibration parameter C2 Terminal 2 frequency setting bias frequency**.

Parameters referred to

Pr.7 Acceleration time, Pr.8 Deceleration time page 187
Pr.79 Operation mode selection page 200
Pr.125 Terminal 2 frequency setting gain frequency page 314
C2(Pr.902) Terminal 2 frequency setting bias frequency page 314

4.5.5 Using an analog signal (current input) to give a frequency command

POINT

- Use the operation panel (FR-DU08) (FWD or) REV to give a start command.
- Use the outputs from the current signal source (4 to 20 mA) to give a frequency command (by connecting it across terminals 4 and 5 (current input)).
- Turn ON the AU signal.
- Set **Pr.79 Operation mode selection** ="4" (External/PU combination operation mode 2).

[Connection diagram]

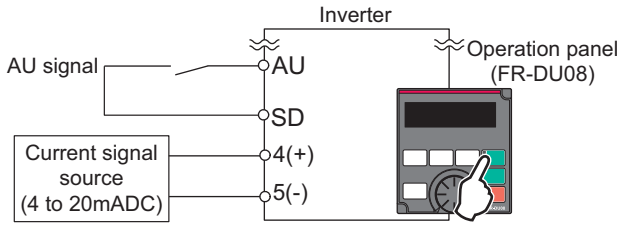

Operation example **Operate at 60 Hz.**

	Operation
1.	Screen at power-ON The monitor display appears.
2.	Changing the operation mode Set "4" in **Pr.79**. [PU] and [EXT] indicators are on. (For setting value change, refer to page 91.)
3.	Terminal 4 input selection Turn ON the terminal 4 input selection signal (AU). Input to the terminal 4 is enabled.
4.	Start Press FWD or REV. [FWD] or [REV] flickers as no frequency command is given.
5.	Acceleration → constant speed Input 20 mA. The frequency value on the indication increases in **Pr.7 Acceleration time,** and "60.00" (60.00 Hz) appears.
6.	Deceleration Input 4 mA or less.The frequency value on the indication decreases in **Pr.8 Deceleration time,** and the motor stops rotating with "0.00" (0.00 Hz) displayed. [FWD] or [REV] indicator flickers.
7.	Stop Press STOP RESET. [FWD] or [REV] indicator turns OFF.

NOTE

- **Pr.184 AU terminal function selection** must be set to "4" (AU signal) (initial value).
- To change the frequency (60 Hz) at the maximum current input (initial value 20 mA), adjust **Pr.126 Terminal 4 frequency setting gain frequency**.
- To change the frequency (0 Hz) at the minimum current input (initial value 4 mA), adjust the **calibration parameter C5 Terminal 4 frequency setting bias frequency**.

Parameters referred to

Pr.7 Acceleration time, Pr.8 Deceleration time page 187
Pr.79 Operation mode selection page 200
Pr.126 Terminal 4 frequency setting gain frequency page 314
Pr.184 AU terminal function selection? page 329
C5(Pr.904) Terminal 4 frequency setting bias frequency page 314

4.6 Basic operation procedure (External operation)

POINT

- Where is the frequency command source?
  - The frequency set in the frequency setting mode of the operation panel → Refer to 4.6.1. (Refer to page 102.)
  - Switches (multi-speed setting) → Refer to 4.6.3. (Refer to page 105.)
  - Voltage input signals → Refer to 4.6.4. (Refer to page 106.)
  - Current input signals → Refer to 4.6.5. (Refer to page 107.)

4.6.1 Using the frequency set by the operation panel

POINT

- Switch ON the STF (STR) signal to give a start command.
- Use the operation panel (FR-DU08) ( ) to give a start command.
- Set **Pr.79** ="3" (External/PU combined operation mode 1).

[Connection diagram]

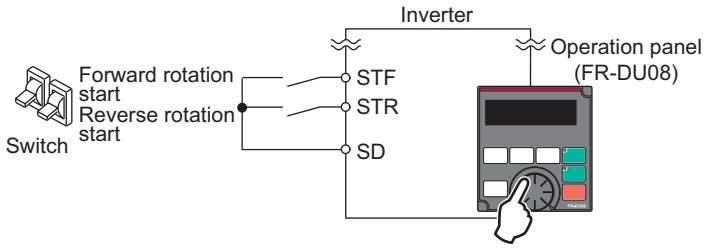

Operation example **Operate at 30 Hz.**

	Operation
1.	Changing the operation mode Set "3" in **Pr.79**. [PU] and [EXT] indicators are on. (For setting value change, refer to page 91.)
2.	Setting the frequency Turn to until the target frequency, "30.00" (30.00 Hz), appears. The frequency flickers for about 5 s. While the value is flickering, press SET to enter the frequency. "F " and "30.00" flicker alternately. After about 3 s of flickering, the indication goes back to "0.00" (monitor display). (If SET is not pressed, the indication of the value goes back to "0.00" (0.00 Hz) after about 5 s of flickering. In that case, turn again and set the frequency.)
3.	Start → acceleration → constant speed Turn ON the start switch (STF or STR). The frequency value on the indication increases in **Pr.7 Acceleration time,** and "30.00" (30.00 Hz) appears. [FWD] indicator is on during the forward rotation, and [REV] indicator is on during the reverse rotation. (To change the set frequency, perform the operation in above step 2. The previously set frequency appears.)
4.	Deceleration → stop Turn OFF the start switch (STF or STR). The frequency value on the indication decreases in **Pr.8 Deceleration time,** and the motor stops rotating with "0.00" (0.00 Hz) displayed.

NOTE

- When both the forward rotation switch (STF) and the reverse rotation switch (STR) are ON, the motor cannot be started. If both are turned ON while the inverter is running, the inverter decelerates to a stop.
- **Pr.178 STF terminal function selection** must be set to "60" (or **Pr.179 STR terminal function selection** must be set to "61"). (All are initial values.)
- Setting **Pr.79 Operation mode selection**="3" also enables multi-speed operation.
- If stopped using STOP RESET on the operation panel (FR-DU08) during the External operation, the inverter enters the PU stop status.

  (PS appears on the operation panel.)

  To reset the PU stop status, turn OFF the start switch (STF or STR), and then press PU EXT. (Refer to page 163)

Parameters referred to

Pr.4 to Pr.6 (multi-speed setting) page 222
Pr.7 Acceleration time, Pr.8 Deceleration time page 187
Pr.178 STF terminal function selection page 329
Pr.179 STR terminal function selection page 329
Pr.79 Operation mode selection page 200

4.6.2 Setting the frequency by switches (multi-speed setting) (Pr.4 to Pr.6)

POINT

- Switch ON the STF (STR) signal to give a start command.
- Turn ON the RH, RM, or RL signal to give a frequency command. (Multi-speed setting)

[Connection diagram]

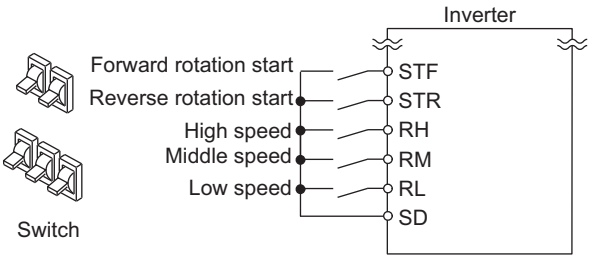

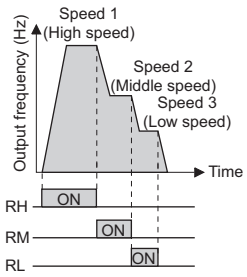

Changing example **Operate at a high-speed (60 Hz).**

	Operation
1.	Screen at power-ON The monitor display appears.
2.	Setting the frequency Turn ON the high-speed switch (RH).
3.	Start → acceleration → constant speed Turn ON the start switch (STF or STR). The frequency value on the indication increases in **Pr.7 Acceleration time,** and "60.00" (60.00 Hz) appears. [FWD] indicator is on during the forward rotation, and [REV] indicator is on during the reverse rotation. • When RM is turned ON, 30 Hz is displayed. When RL is turned ON, 10 Hz is displayed.
4.	Deceleration → stop Turn OFF the start switch (STF or STR).The frequency value on the indication decreases in **Pr.8 Deceleration time,** and the motor stops rotating with "0.00" (0.00 Hz) displayed. [FWD] or [REV] indicator turns OFF. Turn OFF the high-speed switch (RH).

NOTE

- When both the forward rotation switch (STF) and the reverse rotation switch (STR) are ON, the motor cannot be started. If both are turned ON while the inverter is running, the inverter decelerates to a stop.
- The terminal RH is initially set to 60 Hz for the FM type inverter, and to 50 Hz for the CA type inverter. The terminal RM is set to 30 Hz, and the RL is set to 10 Hz. (To change, set **Pr.4, Pr.5, and Pr.6**.)
- In the initial setting, when two or more of multi-speed settings are simultaneously selected, priority is given to the set frequency of the lower signal.
  For example, when RH and RM signals turn ON, RM signal (**Pr.5**) has a higher priority.
- Maximum of 15-speed operation can be performed.

Parameters referred to

Pr.4 to Pr.6 (multi-speed setting) ☞ page 222
Pr.7 Acceleration time, Pr.8 Deceleration time ☞ page 187

4.6.3 Setting the frequency with analog signals (voltage input)

POINT

- Switch ON the STF (STR) signal to give a start command.
- Use the potentiometer (frequency setting potentiometer) to give a frequency command. (by connecting it across terminals 2 and 5 (voltage input)).

[Connection diagram]

(The inverter supplies 5 V power to the frequency setting potentiometer (terminal 10).)

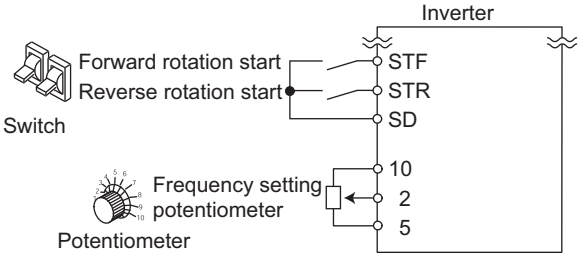

Operation example **Operate at 60 Hz.**

	Operation
1.	Screen at power-ON The monitor display appears.
2.	Start Turn ON the start switch (STF or STR). [FWD] or [REV] flickers as no frequency command is given.
3.	Acceleration → constant speed Turn the potentiometer (frequency setting potentiometer) clockwise slowly to full. The frequency value on the indication increases in **Pr.7 Acceleration time**, and "60.00" (60.00 Hz) appears. [FWD] indicator is on during the forward rotation, and [REV] indicator is on during the reverse rotation.
4.	Deceleration Turn the potentiometer (frequency setting potentiometer) counterclockwise slowly to full. The frequency value on the indication decreases in **Pr.8 Deceleration time**, and the motor stops rotating with "0.00" (0.00 Hz) displayed.
5.	Stop Turn OFF the start switch (STF or STR). [FWD] or [REV] indicator turns OFF.

NOTE

- When both the forward rotation switch (STF) and the reverse rotation switch (STR) are ON, the motor cannot be started. If both are turned ON while the inverter is running, the inverter decelerates to a stop.
- **Pr.178 STF terminal function selection** must be set to "60" (or **Pr.179 STR terminal function selection** must be set to "61"). (All are initial values.)

Parameters referred to

Pr.7 Acceleration time, Pr.8 Deceleration time page 187
Pr.178 STF terminal function selection page 329
Pr.179 STR terminal function selection page 329

4.6.4 Changing the frequency (60 Hz, initial value) at the maximum voltage input (5 V, initial value)

Change the maximum frequency.

Changing example | With a 0 to 5 VDC input frequency setting potentiometer, change the frequency at 5 V from 60 Hz (initial value) to 50 Hz.
Adjust the setting so that the inverter outputs 50 Hz when 5 V is input. Set "50 Hz" in **Pr.125**.

Operation

1. Parameter selection

Turn until P. 125 **(Pr.125)** appears.

Press SET to show the present set value. (60.00 Hz)

2. Changing the maximum frequency

Turn to change the set value to "50.00". (50.00 Hz)

Press SET to enter the setting."50.00" and "P. 125" flicker alternately.

3. Checking the mode/monitor

Press MODE three times to change to the monitor / frequency monitor.

4. Start

Turn ON the start switch (STF or STR), then turn the potentiometer (frequency setting potentiometer) clockwise slowly to full. (Refer to steps 2 and 3 in 4.6.3.)
Operate at 50 Hz.

NOTE

- To set the frequency at 0 V, use **the calibration parameter C2**.

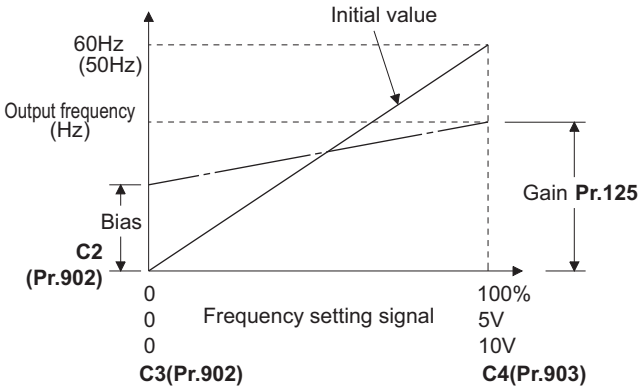

- Other adjustment methods for the frequency setting voltage gain are the following: adjustment by applying a voltage directly across terminals 2 and 5, and adjustment using a specified point without applying a voltage across terminals 2 and 5.

Parameters referred to

Pr.125 Terminal 2 frequency setting gain frequency page 314
C2(Pr.902) Terminal 2 frequency setting bias frequency page 314
C4(Pr.903) Terminal 2 frequency setting gain page 314

4.6.5 Using an analog signal (current input) to give a frequency command

POINT

- Switch ON the STF (STR) signal to give a start command.
- Turn ON the AU signal.
- Set **Pr.79 Operation mode selection**="2" (External operation mode).

[Connection diagram]

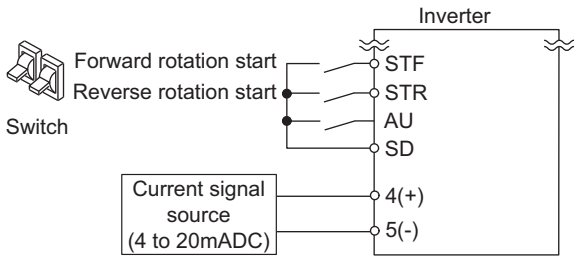

Operation example **Operate at 60 Hz.**

	Operation
1.	Screen at power-ON The monitor display appears.
2.	Terminal 4 input selection Turn ON the terminal 4 input selection signal (AU). Input to the terminal 4 is enabled.
3.	Start Turn ON the start switch (STF or STR). [FWD] or [REV] flickers as no frequency command is given.
4.	Acceleration → constant speed Input 20 mA.The frequency value on the indication increases in **Pr.7 Acceleration time,** and "60.00" (60.00 Hz) appears. [FWD] indicator is on during the forward rotation, and [REV] indicator is on during the reverse rotation.
5.	Deceleration Input 4 mA or less.The frequency value on the indication decreases in **Pr.8 Deceleration time,** and the motor stops rotating with "0.00" (0.00 Hz) displayed. [FWD] or [REV] indicator flickers.
6.	Stop Turn OFF the start switch (STF or STR). [FWD] or [REV] indicator turns OFF.

NOTE

- When both the forward rotation switch (STF) and the reverse rotation switch (STR) are ON, the motor cannot be started. If both are turned ON while the inverter is running, the inverter decelerates to a stop.
- **Pr.184 AU terminal function selection** must be set to "4" (AU signal) (initial value).

Parameters referred to

Pr.7 Acceleration time, Pr.8 Deceleration time ☞ page 187
Pr.184 AU terminal function selection ☞ page 329

4.6.6 Changing the frequency (60 Hz, initial value) at the maximum current input (at 20 mA, initial value)

Change the maximum frequency.

Changing example

With a 4 to 20 mA input frequency setting potentiometer, change the frequency at 20 mA from 60 Hz (initial value) to 50 Hz.

Adjust the setting so that the inverter outputs 50 Hz when 20 mA is input. Set "50 Hz" in **Pr.126**.

	Operation
1.	Parameter selection Turn until "P. 126" **(Pr.126)** appears. Press SET to show the present set value. (60.00 Hz)
2.	Changing the maximum frequency Turn to change the set value to "50.00". (50.00 Hz) Press SET to enter the setting."50.00" and "P. 126" flicker alternately.
3.	Checking the mode/monitor Press MODE three times to change to the monitor / frequency monitor.
4.	Start Turn ON the start switch (STF or STR), then turn the potentiometer (frequency setting potentiometer) clockwise slowly to full. (Refer to steps 3 and 4 in 4.6.5.) Operate at 50 Hz.

NOTE

- To set the frequency at 4 mA, use **the calibration parameter C5**.

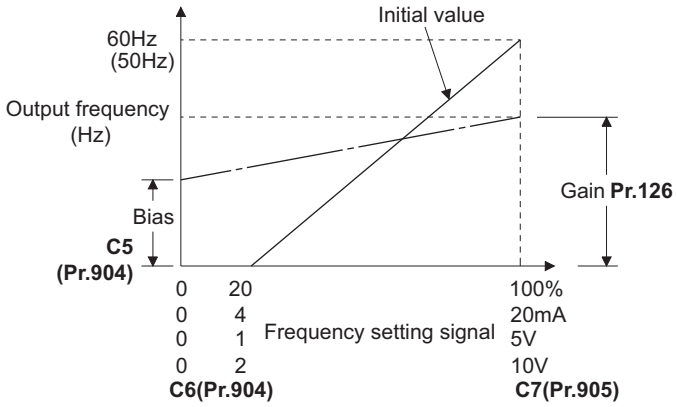

- Other adjustment methods for the frequency setting current gain are the following: adjustment by applying a current through terminals 4 and 5, and adjustment using a specified point without applying a current through terminals 4 and 5.

Parameters referred to

Pr.126 Terminal 4 frequency setting gain frequency page 314
C5(Pr.904) Terminal 4 frequency setting bias frequency page 314
C7(Pr.905) Terminal 4 frequency setting gain page 314

4.7 Basic operation procedure (JOG operation)

4.7.1 Performing JOG operation using external signals

POINT

- Perform JOG operation only while the JOG signal is ON.
- Use **Pr.15 Jog frequency** and **Pr.16 Jog acceleration/deceleration time** for the operation.
- Set **Pr.79 Operation mode selection** = "2" (External operation mode).

[Connection diagram]

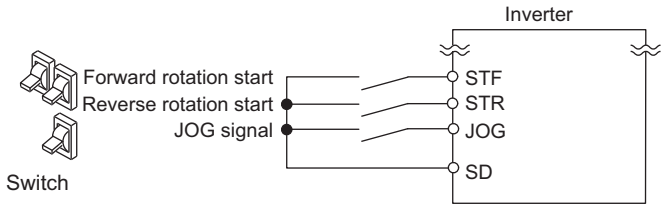

Operation example **Operate at 5 Hz.**

	Operation
1.	Screen at power-ON The monitor display appears.
2.	Turning ON the JOG signal Turn ON the JOG switch (JOG). The inverter is set ready for the JOG operation.
3.	Start → acceleration → constant speed Turn ON the start switch (STF or STR). The frequency value on the indication increases in **Pr.16 Jog acceleration/deceleration time,** and "5.00" (5.00 Hz) appears. [FWD] indicator is on during the forward rotation, and [REV] indicator is on during the reverse rotation.
4.	Deceleration → stop Turn OFF the start switch (STF or STR). The frequency value on the indication decreases in **Pr.16 Jog acceleration/deceleration time,** and the motor stops rotating with "0.00" (0.00 Hz) displayed. [FWD] or [REV] indicator turns OFF. Turn OFF the JOG switch (JOG).
5.	Stop Turn OFF the start switch (STF or STR). [FWD] or [REV] indicator turns OFF.

NOTE

- To change the running frequency, change **Pr.15 Jog frequency** (initial value "5 Hz").
- To change the acceleration/deceleration time, change **Pr.16 Jog acceleration/deceleration time** (initial value "0.5 s").

Parameters referred to

Pr.15 Jog frequency ☞ page 221
Pr.16 Jog acceleration/deceleration time ☞ page 221
Pr.79 Operation mode selection ☞ page 200

4.7.2 JOG operation from the operation panel

POINT

- Operate only while FWD or REV is pressed.

Operation panel
(FR-DU08)

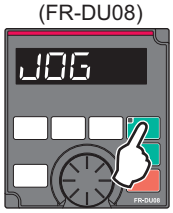

Operation example **Operate at 5 Hz.**

	Operation
1.	Screen at power-ON The monitor display appears.
2.	Changing the operation mode Press PU/EXT twice to choose the PUJOG operation mode. The monitor displays JOG, and [PU] indicator is on.
3.	Start → acceleration → constant speed Keep pressing FWD or REV. The frequency value on the indication increases in **Pr.16 Jog acceleration/deceleration time,** and "5.00" (5.00 Hz) appears.
4.	Deceleration → stop Release FWD or REV. The frequency value on the indication decreases in **Pr.16 Jog acceleration/deceleration time,** and the motor stops rotating with "0.00" (0.00 Hz) displayed.

NOTE

- To change the running frequency, change **Pr.15 Jog frequency** (initial value "5 Hz").
- To change the acceleration/deceleration time, change **Pr.16 Jog acceleration/deceleration time** (initial value "0.5 s").

Parameters referred to

Pr.15 Jog frequency page 221
Pr.16 Jog acceleration/deceleration time page 221

5 PARAMETERS

This chapter explains the function setting for use of this product.
Always read this instructions before use.

The following marks are used to indicate the controls as below. (Parameters without any mark are valid for all control.)

Mark	Control method	Applied motor
V/F	V/F control	Three-phase induction motor
Magnetic flux	Advanced magnetic flux vector control	
PM	PM sensorless vector control	IPM motor

The setting range and the initial value of parameters differ depending on the structure or functions of the inverter. The following common designations are used for each type of the inverter models.

Inverter model	Common designation
FR-F8[ ]0	Standard model
FR-F8[ ]2	Separated converter type

5.1 Parameter List

5.1.1 Parameter list (by parameter number)

For simple variable-speed operation of the inverter, the initial value of the parameters may be used as they are. Set the necessary parameters to meet the load and operational specifications. Parameter setting, change and check can be made from the operation panel (FR-DU08).

NOTE

- Simple indicates simple mode parameters. Use **Pr.160 User group read selection** to indicate the simple mode parameters only.
- Parameter setting may be restricted in some operating statuses. Use **Pr.77 Parameter write selection** to change the setting.
- Refer to Appendix 3 (page 597) for instruction codes for communication and availability of parameter clear, all clear, and parameter copy of each parameter.

Function	Pr.	Pr. group	Name	Setting range	Minimum setting increments	Initial value FM	Initial value CA	Refer to page	Customer setting
Basic functions	0	G000	Torque boost Simple	0 to 30%	0.1%	6% *1 4% *1 3% *1 2% *1 1.5% *1 1% *1		496	
	1	H400	Maximum frequency Simple	0 to 120 Hz	0.01 Hz	120 Hz *2 60 Hz *3		245	
	2	H401	Minimum frequency Simple	0 to 120 Hz	0.01 Hz	0 Hz		245	
	3	G001	Base frequency Simple	0 to 590 Hz	0.01 Hz	60 Hz	50 Hz	497	
	4	D301	Multi-speed setting (high speed) Simple	0 to 590 Hz	0.01 Hz	60 Hz	50 Hz	222	
	5	D302	Multi-speed setting (middle speed) Simple	0 to 590 Hz	0.01 Hz	30 Hz		222	
	6	D303	Multi-speed setting (low speed) Simple	0 to 590 Hz	0.01 Hz	10 Hz		222	
	7	F010	Acceleration time Simple	0 to 3600 s	0.1 s	5 s *4 15 s *5		187	
	8	F011	Deceleration time Simple	0 to 3600 s	0.1 s	10 s *4 30 s *5		187	
	9	H000 C103	Electronic thermal O/L relay Simple	0 to 500 A	0.01 A *2	Rated inverter current		225, 341, 351	
			Rated motor current Simple	0 to 3600 A	0.1 A *3				
DC injection brake	10	G100	DC injection brake operation frequency	0 to 120 Hz, 9999	0.01 Hz	3 Hz		502	
	11	G101	DC injection brake operation time	0 to 10 s, 8888	0.1 s	0.5 s		502	
	12	G110	DC injection brake operation voltage	0 to 30%	0.1%	4% *6 2% *6 1% *6		502	
—	13	F102	Starting frequency	0 to 60 Hz	0.01 Hz	0.5 Hz		197, 198	
—	14	G003	Load pattern selection	0, 1	1	1		499	
Jog operation	15	D200	Jog frequency	0 to 590 Hz	0.01 Hz	5 Hz		221	
	16	F002	Jog acceleration/deceleration time	0 to 3600 s	0.1 s	0.5 s		221	
—	17	T720	MRS input selection	0, 2, 4	1	0		332	
—	18	H402	High speed maximum frequency	0 to 590 Hz	0.01 Hz	120 Hz *2 60 Hz *3		245	
—	19	G002	Base frequency voltage	0 to 1000 V, 8888, 9999	0.1 V	9999	8888	497	

Function	Pr.	Pr. group	Name	Setting range	Minimum setting increments	Initial value FM	Initial value CA	Refer to page	Customer setting
Acceleration/deceleration times	20	F000	Acceleration/deceleration reference frequency	1 to 590 Hz	0.01 Hz	60 Hz	50 Hz	187	
	21	F001	Acceleration/deceleration time increments	0, 1	1	0		187	
Stall prevention	22	H500	Stall prevention operation level	0 to 400%	0.1%	120%	110%	248	
	23	H610	Stall prevention operation level compensation factor at double speed	0 to 200%, 9999	0.1%	9999		248	
Multi-speed setting	24 to 27	D304 to D307	Multi-speed setting (4 speed to 7 speed)	0 to 590 Hz, 9999	0.01 Hz	9999		222	
—	28	D300	Multi-speed input compensation selection	0, 1	1	0		222	
—	29	F100	Acceleration/deceleration pattern selection	0 to 3, 6	1	0		191	
—	30	E300	Regenerative function selection	0 to 2, 10, 11, 20, 21, 100 to 102, 110, 111, 120, 121 *10	1	0		508	
				2, 10, 11, 102, 110, 111 *11	1	10			
Frequency jump	31	H420	Frequency jump 1A	0 to 590 Hz, 9999	0.01 Hz	9999		246	
	32	H421	Frequency jump 1B	0 to 590 Hz, 9999	0.01 Hz	9999		246	
	33	H422	Frequency jump 2A	0 to 590 Hz, 9999	0.01 Hz	9999		246	
	34	H423	Frequency jump 2B	0 to 590 Hz, 9999	0.01 Hz	9999		246	
	35	H424	Frequency jump 3A	0 to 590 Hz, 9999	0.01 Hz	9999		246	
	36	H425	Frequency jump 3B	0 to 590 Hz, 9999	0.01 Hz	9999		246	
—	37	M000	Speed display	0, 1 to 9998	1	0		261	
Frequency detection	41	M441	Up-to-frequency sensitivity	0 to 100%	0.1%	10%		294	
	42	M442	Output frequency detection	0 to 590 Hz	0.01 Hz	6 Hz		294	
	43	M443	Output frequency detection for reverse rotation	0 to 590 Hz, 9999	0.01 Hz	9999		294	
Second functions	44	F020	Second acceleration/deceleration time	0 to 3600 s	0.1 s	5 s		187	
	45	F021	Second deceleration time	0 to 3600 s, 9999	0.1 s	9999		187	
	46	G010	Second torque boost	0 to 30%, 9999	0.1%	9999		496	
	47	G011	Second V/F (base frequency)	0 to 590 Hz, 9999	0.01 Hz	9999		497	
	48	H600	Second stall prevention operation level	0 to 400%	0.1%	120%	110%	248	
	49	H601	Second stall prevention operation frequency	0 to 590 Hz, 9999	0.01 Hz	0 Hz		248	
	50	M444	Second output frequency detection	0 to 590 Hz	0.01 Hz	30 Hz		294	
	51	H010 C203	Second electronic thermal O/L relay Rated second motor current	0 to 500 A, 9999 *2	0.01 A	9999		225, 341, 351	
				0 to 3600 A, 9999 *3	0.1 A				
Monitor functions	52	M100	Operation panel main monitor selection	0, 5 to 14, 17, 18, 20, 23 to 25, 34, 38, 40 to 45, 50 to 57, 61, 62, 64, 67, 68, 81 to 96, 98, 100	1	0		263	
	54	M300	FM/CA terminal function selection	1 to 3, 5 to 14, 17, 18, 21, 24, 34, 50, 52, 53, 61, 62, 67, 70, 85, 87 to 90, 92, 93, 95, 98	1	1		273	
	55	M040	Frequency monitoring reference	0 to 590 Hz	0.01 Hz	60 Hz	50 Hz	273	
	56	M041	Current monitoring reference	0 to 500 A *2	0.01 A	Rated inverter current		273	
				0 to 3600 A *3	0.1 A				

Function	Pr.	Pr. group	Name	Setting range	Minimum setting increments	Initial value FM	Initial value CA	Refer to page	Customer setting
Automatic restart	57	A702	Restart coasting time	0, 0.1 to 30 s, 9999	0.1 s	9999		414, 420	
	58	A703	Restart cushion time	0 to 60 s	0.1 s	1 s		414	
—	59	F101	Remote function selection	0 to 3, 11 to 13	1	0		194	
—	60	G030	Energy saving control selection	0, 4, 9	1	0		500	
—	65	H300	Retry selection	0 to 5	1	0		236	
—	66	H611	Stall prevention operation reduction starting frequency	0 to 590 Hz	0.01 Hz	60 Hz	50 Hz	248	
Retry	67	H301	Number of retries at fault occurrence	0 to 10, 101 to 110	1	0		236	
	68	H302	Retry waiting time	0.1 to 600 s	0.1 s	1 s		236	
	69	H303	Retry count display erase	0	1	0		236	
—	70	G107	Parameter for manufacturer setting. Do not set.						
—	71	C100	Applied motor	0 to 6, 13 to 16, 20, 23, 24, 40, 43, 44, 50, 53, 54, 70, 73, 74, 210, 213, 214, 8090, 8093, 8094, 9090, 9093, 9094	1	0		337, 341, 351	
—	72	E600	PWM frequency selection	0 to 15 *2	1	2		179	
—				0 to 6, 25 *3					
—	73	T000	Analog input selection	0 to 7, 10 to 17	1	1		306, 311	
—	74	T002	Input filter time constant	0 to 8	1	1		313	
—	75	-	Reset selection/disconnected PU detection/PU stop selection	0 to 3, 14 to 17 *2	1	14		162	
				0 to 3, 14 to 17, 100 to 103, 114 to 117 *3					
		E100	Reset selection	0, 1		0			
		E101	Disconnected PU detection						
		E102	PU stop selection			1			
		E107	Reset limit	0 *2	1	0			
				0, 1 *3					
—	76	M510	Fault code output selection	0 to 2	1	0		302	
—	77	E400	Parameter write selection	0 to 2	1	0		169	
—	78	D020	Reverse rotation prevention selection	0 to 2	1	0		217	
—	79	D000	Operation mode selection Simple	0 to 4, 6, 7	1	0		200, 209	

Function	Pr.	Pr. group	Name	Setting range	Minimum setting increments	Initial value FM	Initial value CA	Refer to page	Customer setting
Motor constants	80	C101	Motor capacity	0.4 to 55 kW, 9999 *2 0 to 3600 kW, 9999 *3	0.01 kW *2 0.1 kW *3	9999		143, 341, 351	
	81	C102	Number of motor poles	2, 4, 6, 8, 10, 12, 9999	1	9999		143, 341, 351	
	82	C125	Motor excitation current	0 to 500 A, 9999 *2 0 to 3600 A, 9999 *3	0.01 A *2 0.1 A *3	9999		341	
	83	C104	Rated motor voltage	0 to 1000 V	0.1 V	200 V *7 400 V *8		143, 341, 351	
	84	C105	Rated motor frequency	10 to 400 Hz, 9999	0.01 Hz	9999		143, 341, 351	
	89	G932	Speed control gain (Advanced magnetic flux vector)	0 to 200%, 9999	0.1%	9999		147	
	90	C120	Motor constant (R1)	0 to 50 Ω, 9999 *2 0 to 400 mΩ, 9999 *3	0.001 Ω *2 0.01 mΩ *3	9999		341, 351, 422	
	91	C121	Motor constant (R2)	0 to 50 Ω, 9999 *2 0 to 400 mΩ, 9999 *3	0.001 Ω *2 0.01 mΩ *3	9999		341	
	92	C122	Motor constant (L1)/d-axis inductance (Ld)	0 to 6000mH, 9999 *2 0 to 400mH, 9999 *3	0.1 mH *2 0.01 mH *3	9999		341, 351	
	93	C123	Motor constant (L2)/q-axis inductance (Lq)	0 to 6000mH, 9999 *2 0 to 400mH, 9999 *3	0.1 mH *2 0.01 mH *3	9999		341, 351	
	94	C124	Motor constant (X)	0 to 100%, 9999	0.1% *2 0.01% *3	9999		341	
	95	C111	Online auto tuning selection	0, 1	1	0		359	
	96	C110	Auto tuning setting/status	0, 1, 11, 101	1	0		341, 351, 422	
Adjustable 5 points V/F	100	G040	V/F1 (first frequency)	0 to 590 Hz, 9999	0.01 Hz	9999		501	
	101	G041	V/F1 (first frequency voltage)	0 to 1000 V	0.1 V	0 V		501	
	102	G042	V/F2 (second frequency)	0 to 590 Hz, 9999	0.01 Hz	9999		501	
	103	G043	V/F2 (second frequency voltage)	0 to 1000 V	0.1 V	0 V		501	
	104	G044	V/F3 (third frequency)	0 to 590 Hz, 9999	0.01 Hz	9999		501	
	105	G045	V/F3 (third frequency voltage)	0 to 1000 V	0.1 V	0 V		501	
	106	G046	V/F4 (fourth frequency)	0 to 590 Hz, 9999	0.01 Hz	9999		501	
	107	G047	V/F4 (fourth frequency voltage)	0 to 1000 V	0.1 V	0 V		501	
	108	G048	V/F5 (fifth frequency)	0 to 590 Hz, 9999	0.01 Hz	9999		501	
	109	G049	V/F5 (fifth frequency voltage)	0 to 1000 V	0.1 V	0 V		501	
PU connector communication	117	N020	PU communication station number	0 to 31	1	0		449	
	118	N021	PU communication speed	48, 96, 192, 384, 576, 768, 1152	1	192		449	
	119	-	PU communication stop bit length / data length	0, 1, 10, 11	1	1		449	
		N022	PU communication data length	0, 1		0			
		N023	PU communication stop bit length	0, 1		1			
	120	N024	PU communication parity check	0 to 2	1	2		449	
	121	N025	Number of PU communication retries	0 to 10, 9999	1	1		449	
	122	N026	PU communication check time interval	0, 0.1 to 999.8 s, 9999	0.1 s	9999		449	
	123	N027	PU communication waiting time setting	0 to 150 ms, 9999	1 ms	9999		449	
	124	N028	PU communication CR/LF selection	0 to 2	1	1		449	
—	125	T022	Terminal 2 frequency setting gain frequency Simple	0 to 590 Hz	0.01 Hz	60 Hz	50 Hz	314	
—	126	T042	Terminal 4 frequency setting gain frequency Simple	0 to 590 Hz	0.01 Hz	60 Hz	50 Hz	314	

Function	Pr.	Pr. group	Name	Setting range	Minimum setting increments	Initial value		Refer to page	Customer setting
						FM	CA		
PID operation	127	A612	PID control automatic switchover frequency	0 to 590 Hz, 9999	0.01 Hz	9999		378	
	128	A610	PID action selection	0, 10, 11, 20, 21, 50, 51, 60, 61, 70, 71, 80, 81, 90, 91, 100, 101, 1000, 1001, 1010, 1011, 2000, 2001, 2010, 2011	1	0		378	
	129	A613	PID proportional band	0.1 to 1000%, 9999	0.1%	100%		378	
	130	A614	PID integral time	0.1 to 3600 s, 9999	0.1 s	1 s		378	
	131	A601	PID upper limit	0 to 100%, 9999	0.1%	9999		378	
	132	A602	PID lower limit	0 to 100%, 9999	0.1%	9999		378	
	133	A611	PID action set point	0 to 100%, 9999	0.01%	9999		378	
	134	A615	PID differential time	0.01 to 10 s, 9999	0.01 s	9999		378	
Bypass	135	A000	Electronic bypass sequence selection	0, 1	1	0		363	
	136	A001	MC switchover interlock time	0 to 100 s	0.1 s	1 s		363	
	137	A002	Start waiting time	0 to 100 s	0.1 s	0.5 s		363	
	138	A003	Bypass selection at a fault	0, 1	1	0		363	
	139	A004	Automatic switchover frequency from inverter to bypass operation	0 to 60 Hz, 9999	0.01 Hz	9999		363	
Backlash measures	140	F200	Backlash acceleration stopping frequency	0 to 590 Hz	0.01 Hz	1 Hz		191	
	141	F201	Backlash acceleration stopping time	0 to 360 s	0.1 s	0.5 s		191	
	142	F202	Backlash deceleration stopping frequency	0 to 590 Hz	0.01 Hz	1 Hz		191	
	143	F203	Backlash deceleration stopping time	0 to 360 s	0.1 s	0.5 s		191	
—	144	M002	Speed setting switchover	0, 2, 4, 6, 8, 10, 12, 102, 104, 106, 108, 110, 112	1	4		261	
PU	145	E103	PU display language selection	0 to 7	1	1		164	
—	147	F022	Acceleration/deceleration time switching frequency	0 to 590 Hz, 9999	0.01 Hz	9999		187	
Current detection	148	H620	Stall prevention level at 0 V input	0 to 400%	0.1%	120%	110%	248	
	149	H621	Stall prevention level at 10 V input	0 to 400%	0.1%	150%	120%	248	
	150	M460	Output current detection level	0 to 400%	0.1%	120%	110%	296	
	151	M461	Output current detection signal delay time	0 to 10 s	0.1 s	0 s		296	
	152	M462	Zero current detection level	0 to 400%	0.1%	5%		296	
	153	M463	Zero current detection time	0 to 10 s	0.01 s	0.5 s		296	
—	154	H631	Voltage reduction selection during stall prevention operation	0, 1, 10, 11	1	1		248	
—	155	T730	RT signal function validity condition selection	0, 10	1	0		333	
—	156	H501	Stall prevention operation selection	0 to 31, 100, 101	1	0		248	
—	157	M430	OL signal output timer	0 to 25 s, 9999	0.1 s	0 s		248	
—	158	M301	AM terminal function selection	1 to 3, 5 to 14, 17, 18, 21, 24, 34, 50, 52 to 54, 61, 62, 67, 70, 86 to 96, 98	1	1		273	
—	159	A005	Automatic switchover frequency range from bypass to inverter operation	0 to 10 Hz, 9999	0.01 Hz	9999		363	
—	160	E440	User group read selection Simple	0, 1, 9999	1	9999	0	177	
—	161	E200	Frequency setting/key lock operation selection	0, 1, 10, 11	1	0		166	

Function	Pr.	Pr. group	Name	Setting range	Minimum setting increments	Initial value FM	Initial value CA	Refer to page	Customer setting
Automatic restart functions	162	A700	Automatic restart after instantaneous power failure selection	0 to 3, 10 to 13	1	0		414, 420, 422	
	163	A704	First cushion time for restart	0 to 20 s	0.1 s	0 s		414	
	164	A705	First cushion voltage for restart	0 to 100%	0.1%	0%		414	
	165	A710	Stall prevention operation level for restart	0 to 400%	0.1%	120%	110%	414	
Current detection	166	M433	Output current detection signal retention time	0 to 10 s, 9999	0.1 s	0.1 s		296	
	167	M464	Output current detection operation selection	0, 1, 10, 11	1	0		296	
—	168	E000	Parameter for manufacturer setting. Do not set.						
		E080							
—	169	E001							
		E081							
Cumulative monitor clear	170	M020	Watt-hour meter clear	0, 10, 9999	1	9999		263	
	171	M030	Operation hour meter clear	0, 9999	1	9999		263	
User group	172	E441	User group registered display/ batch clear	9999, (0 to 16)	1	0		177	
	173	E442	User group registration	0 to 1999, 9999	1	9999		177	
	174	E443	User group clear	0 to 1999, 9999	1	9999		177	
Input terminal function assignment	178	T700	STF terminal function selection	0 to 8, 10 to 14, 16, 18, 24, 25, 28, 37 to 40, 46 to 48, 50, 51, 60, 62, 64 to 67, 70 to 73, 77 to 81, 84, 94 to 98, 9999	1	60		329	
	179	T701	STR terminal function selection	0 to 8, 10 to 14, 16, 18, 24, 25, 28, 37 to 40, 46 to 48, 50, 51, 61, 62, 64 to 67, 70 to 73, 77 to 81, 84, 94 to 98, 9999	1	61		329	
	180	T702	RL terminal function selection	0 to 8, 10 to 14, 16, 18, 24, 25, 28, 37 to 40, 46 to 48, 50, 51, 62, 64 to 67, 70 to 73, 77 to 81, 84, 94 to 98, 9999	1	0		329	
	181	T703	RM terminal function selection		1	1		329	
	182	T704	RH terminal function selection		1	2		329	
	183	T705	RT terminal function selection		1	3		329	
	184	T706	AU terminal function selection		1	4		329	
	185	T707	JOG terminal function selection		1	5		329	
	186	T708	CS terminal function selection		1	9999		329	
	187	T709	MRS terminal function selection		1	24 *10 10 *11		329	
	188	T710	STOP terminal function selection		1	25		329	
	189	T711	RES terminal function selection		1	62		329	

Function	Pr.	Pr. group	Name	Setting range	Minimum setting increments	Initial value FM	Initial value CA	Refer to page	Customer setting
Output terminal function assignment	190	M400	RUN terminal function selection	0 to 5, 7, 8, 10 to 19, 25, 26, 35, 39, 40, 45 to 54, 57, 64 to 68, 70 to 79, 82, 85, 90 to 96, 98 to 105, 107, 108, 110 to 116, 125, 126, 135, 139, 140, 145 to 154, 157, 164 to 168, 170 to 179, 182, 185, 190 to 196, 198 to 208, 211 to 213, 215, 300 to 308, 311 to 313, 315, 9999	1	0		288	
	191	M401	SU terminal function selection		1	1		288	
	192	M402	IPF terminal function selection		1	2 *10*12 9999 *11		288	
	193	M403	OL terminal function selection		1	3		288	
	194	M404	FU terminal function selection		1	4		288	
	195	M405	ABC1 terminal function selection	0 to 5, 7, 8, 10 to 19, 25, 26, 35, 39, 40, 45 to 54, 57, 64 to 68, 70 to 79, 82, 85, 90, 91, 94 to 96, 98 to 105, 107, 108, 110 to 116, 125, 126, 135, 139, 140, 145 to 154, 157, 164 to 168, 170 to 179, 182, 185, 190, 191, 194 to 196, 198 to 208, 211 to 213, 215, 300 to 308, 311 to 313, 315, 9999	1	99		288	
	196	M406	ABC2 terminal function selection		1	9999		288	
Multi-speed setting	232 to 239	D308 to D315	Multi-speed setting (8 speed to 15 speed)	0 to 590 Hz, 9999	0.01 Hz	9999		222	
—	240	E601	Soft-PWM operation selection	0, 1	1	1		179	
—	241	M043	Analog input display unit switchover	0, 1	1	0		314	
—	242	T021	Terminal 1 added compensation amount (terminal 2)	0 to 100%	0.1%	100%		311	
—	243	T041	Terminal 1 added compensation amount (terminal 4)	0 to 100%	0.1%	75%		311	
—	244	H100	Cooling fan operation selection	0, 1, 101 to 105	1	1		233	
Slip compensation	245	G203	Rated slip	0 to 50%, 9999	0.01%	9999		518	
	246	G204	Slip compensation time constant	0.01 to 10 s	0.01 s	0.5 s		518	
	247	G205	Constant-power range slip compensation selection	0, 9999	1	9999		518	
—	248	A006	Self power management selection	0 to 2	1	0		370	
—	249	H101	Earth (ground) fault detection at start	0, 1	1	0		234	
—	250	G106	Stop selection	0 to 100 s, 1000 to 1100 s, 8888, 9999	0.1 s	9999		507	
—	251	H200	Output phase loss protection selection	0, 1	1	1		235	

Function	Pr.	Pr. group	Name	Setting range	Minimum setting increments	Initial value		Refer to page	Customer setting
						FM	CA		
Frequency compensation function	252	T050	Override bias	0 to 200%	0.1%	50%		311	
	253	T051	Override gain	0 to 200%	0.1%	150%		311	
—	254	A007	Main circuit power OFF waiting time	0 to 3600 s, 9999	1 s	600 s		370	
Life check	255	E700	Life alarm status display	(0 to 15)	1	0		180	
	256 *12	E701	Inrush current limit circuit life display	(0 to 100%)	1%	100%		180	
	257	E702	Control circuit capacitor life display	(0 to 100%)	1%	100%		180	
	258 *12	E703	Main circuit capacitor life display	(0 to 100%)	1%	100%		180	
	259 *12	E704	Main circuit capacitor life measuring	0, 1	1	0		180	
—	260	E602	PWM frequency automatic switchover	0, 1	1	1		179	
Power failure stop	261	A730	Power failure stop selection	0 to 2, 11, 12, 21, 22	1	0		426	
	262	A731	Subtracted frequency at deceleration start	0 to 20 Hz	0.01 Hz	3 Hz		426	
	263	A732	Subtraction starting frequency	0 to 590 Hz, 9999	0.01 Hz	60 Hz	50 Hz	426	
	264	A733	Power-failure deceleration time 1	0 to 3600 s	0.1 s	5 s		426	
	265	A734	Power-failure deceleration time 2	0 to 3600 s, 9999	0.1 s	9999		426	
	266	A735	Power failure deceleration time switchover frequency	0 to 590 Hz	0.01 Hz	60 Hz	50 Hz	426	
—	267	T001	Terminal 4 input selection	0 to 2	1	0		306	
—	268	M022	Monitor decimal digits selection	0, 1, 9999	1	9999		263	
—	269	E023	Parameter for manufacturer setting. Do not set.						
—	289	M431	Inverter output terminal filter	5 to 50 ms, 9999	1 ms	9999		288	
—	290	M044	Monitor negative output selection	0 to 7	1	0		263, 273	
—	291	D100	Pulse train I/O selection	[FM Type] 0, 1, 10, 11, 20, 21, 100 [CA Type] 0, 1	1	0		218, 273	
—	294	A785	UV avoidance voltage gain	0 to 200%	0.1%	100%		426	
—	295	E201	Frequency change increment amount setting	0, 0.01, 0.1, 1, 10	0.01	0		167	
Password function	296	E410	Password lock level	0 to 6, 99, 100 to 106, 199, 9999	1	9999		171	
	297	E411	Password lock/unlock	(0 to 5), 1000 to 9998, 9999	1	9999		171	
—	298	A711	Frequency search gain	0 to 32767, 9999	1	9999		422	
—	299	A701	Rotation direction detection selection at restarting	0, 1, 9999	1	9999		414	

Function	Pr.	Pr. group	Name	Setting range	Minimum setting increments	Initial value		Refer to page	Customer setting
						FM	CA		
RS-485 communication	331	N030	RS-485 communication station number	0 to 31 (0 to 247)	1	0		449	
	332	N031	RS-485 communication speed	3, 6, 12, 24, 48, 96, 192, 384, 576, 768, 1152	1	96		449	
	333	-	RS-485 communication stop bit length / data length	0, 1, 10, 11	1	1		449	
		N032	PU communication data length	0, 1	1	0			
		N033	PU communication stop bit length	0, 1	1	1			
	334	N034	RS-485 communication parity check selection	0 to 2	1	2		449	
	335	N035	RS-485 communication retry count	0 to 10, 9999	1	1		449	
	336	N036	RS-485 communication check time interval	0 to 999.8 s, 9999	0.1 s	0 s		449	
	337	N037	RS-485 communication waiting time setting	0 to 150 ms, 9999	1 ms	9999		449	
	338	D010	Communication operation command source	0, 1	1	0		210	
	339	D011	Communication speed command source	0 to 2	1	0		210	
	340	D001	Communication startup mode selection	0 to 2, 10, 12	1	0		209	
	341	N038	RS-485 communication CR/LF selection	0 to 2	1	1		449	
	342	N001	Communication EEPROM write selection	0, 1	1	0		446	
	343	N080	Communication error count	—	1	0		465	
—	374	H800	Overspeed detection level	0 to 590 Hz, 9999	0.01 Hz	9999		259	
Pulse train input	384	D101	Input pulse division scaling factor	0 to 250	1	0		218	
	385	D110	Frequency for zero input pulse	0 to 590 Hz	0.01 Hz	0 Hz		218	
	386	D111	Frequency for maximum input pulse	0 to 590 Hz	0.01 Hz	60 Hz	50 Hz	218	
—	390	N054	% setting reference frequency	1 to 590 Hz	0.01 Hz	60 Hz	50 Hz	480	
PLC function	414	A800	PLC function operation selection	0 to 2	1	0		431	
	415	A801	Inverter operation lock mode setting	0, 1	1	0		431	
	416	A802	Pre-scale function selection	0 to 5	1	0		431	
	417	A803	Pre-scale setting value	0 to 32767	1	1		431	

Function	Pr.	Pr. group	Name	Setting range	Minimum setting increments	Initial value FM	Initial value CA	Refer to page	Customer setting
Second motor constants	450	C200	Second applied motor	0, 1, 3 to 6, 13 to 16, 20, 23, 24, 40, 43, 44, 50, 53, 54, 70, 73, 74, 210, 213, 214, 8093, 8094, 9090, 9093, 9094, 9999	1	9999		337	
	453	C201	Second motor capacity	0.4 to 55 kW, 9999 *2 0 to 3600 kW, 9999 *3	0.01 kW *2 0.1 kW *3	9999		341, 351	
	454	C202	Number of second motor poles	2, 4, 6, 8, 10, 12, 9999	1	9999		341, 351	
	455	C225	Second motor excitation current	0 to 500 A, 9999 *2 0 to 3600 A, 9999 *3	0.01 A *2 0.1 A *3	9999		341	
	456	C204	Rated second motor voltage	0 to 1000 V	0.1 V	200 V 400 V		341, 351	
	457	C205	Rated second motor frequency	10 to 400 Hz, 9999	0.01 Hz	9999		341, 351	
	458	C220	Second motor constant (R1)	0 to 50 Ω, 9999 *2 0 to 400 mΩ, 9999 *3	0.001 Ω *2 0.01 mΩ *3	9999		341, 351, 422	
	459	C221	Second motor constant (R2)	0 to 50 Ω, 9999 *2 0 to 400 mΩ, 9999 *3	0.001 Ω*2 0.01 mΩ *3	9999		341	
	460	C222	Second motor constant (L1) / d-axis inductance (Ld)	0 to 6000mH, 9999 *2 0 to 400mH, 9999 *3	0.1 mH *2 0.01 mH *3	9999		341, 351	
	461	C223	Second motor constant (L2) / q-axis inductance (Lq)	0 to 6000mH, 9999 *2 0 to 400mH, 9999 *3	0.1 mH *2 0.01 mH *3	9999		341, 351	
	462	C224	Second motor constant (X)	0 to 100%, 9999	0.1% *2 0.01% *3	9999		341	
	463	C210	Second motor auto tuning setting/ status	0, 1, 11, 101	1	0		341, 351, 422	
Remote output	495	M500	Remote output selection	0, 1, 10, 11	1	0		298	
	496	M501	Remote output data 1	0 to 4095	1	0		298	
	497	M502	Remote output data 2	0 to 4095	1	0		298	
—	498	A804	PLC function flash memory clear	0 to 9999	1	0		431	
—	502	N013	Stop mode selection at communication error	0 to 3	1	0		446	
Maintenance	503	E710	Maintenance timer 1	0 (1 to 9998)	1	0		184	
	504	E711	Maintenance timer 1 warning output set time	0 to 9998, 9999	1	9999		184	
—	505	M001	Speed setting reference	1 to 590 Hz	0.01 Hz	60 Hz	50 Hz	261	
—	514 *12	H324	Emergency drive dedicated waiting time	0.1 to 600 s, 9999	0.1 s	9999		238	
—	515 *12	H322	Emergency drive dedicated retry count	1 to 200, 9999	1	1		238	
—	522	G105	Output stop frequency	0 to 590 Hz, 9999	0.01 Hz	9999		505	
—	523 *12	H320	Emergency drive mode selection	100, 111, 112, 121 to 124, 200, 211, 212, 221 to 224, 300, 311, 312, 321 to 324, 400, 411, 412, 421 to 424, 9999	1	9999		238	
—	524 *12	H321	Emergency drive running speed	0 to 590 Hz, 9999	0.01 Hz	9999		238	
—	539	N002	Modbus-RTU communication check time interval	0 to 999.8 s, 9999	0.1 s	9999		465	
USB	547	N040	USB communication station number	0 to 31	1	0		493	
	548	N041	USB communication check time interval	0 to 999.8 s, 9999	0.1 s	9999		493	

Function	Pr.	Pr. group	Name	Setting range	Minimum setting increments	Initial value FM	Initial value CA	Refer to page	Customer setting
Communication	549	N000	Protocol selection	0, 1, 2	1	0		446	
	550	D012	NET mode operation command source selection	0, 1, 9999	1	9999		210	
	551	D013	PU mode operation command source selection	1 to 3, 9999	1	9999		210	
—	552	H429	Frequency jump range	0 to 30 Hz, 9999	0.01 Hz	9999		246	
PID control	553	A603	PID deviation limit	0 to 100%, 9999	0.1%	9999		378	
	554	A604	PID signal operation selection	0 to 3, 10 to 13	1	0		378	
Current average value monitor	555	E720	Current average time	0.1 to 1 s	0.1 s	1 s		185	
	556	E721	Data output mask time	0 to 20 s	0.1 s	0 s		185	
	557	E722	Current average value monitor signal output reference current	0 to 500 A*2	0.01 A *2	Rated inverter current		185	
				0 to 3600 A*3	0.1 A *3				
—	560	A712	Second frequency search gain	0 to 32767, 9999	1	9999		422	
—	561	H020	PTC thermistor protection level	0.5 to 30 kΩ, 9999	0.01 kΩ	9999		225	
—	563	M021	Energization time carrying-over times	(0 to 65535)	1	0		263	
—	564	M031	Operating time carrying-over times	(0 to 65535)	1	0		263	
Second motor constants	569	G942	Second motor speed control gain	0 to 200%, 9999	0.1%	9999		147	
Multiple rating	570	E301	Multiple rating setting	0, 1	1	1	0	168	
—	571	F103	Holding time at a start	0 to 10 s, 9999	0.1 s	9999		197	
—	573	A680 T052	4 mA input check selection	1 to 4, 9999	1	9999		325	
—	574	C211	Second motor online auto tuning	0, 1	1	0		359	
PID control	575	A621	Output interruption detection time	0 to 3600 s, 9999	0.1 s	1 s		378	
	576	A622	Output interruption detection level	0 to 590 Hz	0.01 Hz	0 Hz		378	
	577	A623	Output interruption cancel level	900 to 1100%	0.1%	1000%		378	
Pump function	578	A400	Auxiliary motor operation selection	0 to 3	1	0		406	
	579	A401	Motor connection function selection	0 to 3	1	0		406	
	580	A402	MC switching interlock time	0 to 100 s	0.1 s	1 s		406	
	581	A403	Start waiting time	0 to 100 s	0.1 s	1 s		406	
	582	A404	Auxiliary motor connection-time deceleration time	0 to 3600 s, 9999	0.1 s	1 s		406	
	583	A405	Auxiliary motor disconnection-time acceleration time	0 to 3600 s, 9999	0.1 s	1 s		406	
	584	A406	Auxiliary motor 1 starting frequency	0 to 590 Hz	0.01 Hz	60 Hz	50 Hz	406	
	585	A407	Auxiliary motor 2 starting frequency	0 to 590 Hz	0.01 Hz	60 Hz	50 Hz	406	
	586	A408	Auxiliary motor 3 starting frequency	0 to 590 Hz	0.01 Hz	60 Hz	50 Hz	406	
	587	A409	Auxiliary motor 1 stopping frequency	0 to 590 Hz	0.01 Hz	0 Hz		406	
	588	A410	Auxiliary motor 2 stopping frequency	0 to 590 Hz	0.01 Hz	0 Hz		406	
	589	A411	Auxiliary motor 3 stopping frequency	0 to 590 Hz	0.01 Hz	0 Hz		406	
	590	A412	Auxiliary motor start detection time	0 to 3600 s	0.1 s	5 s		406	
	591	A413	Auxiliary motor stop detection time	0 to 3600 s	0.1 s	5 s		406	

Function	Pr.	Pr. group	Name	Setting range	Minimum setting increments	Initial value FM	Initial value CA	Refer to page	Customer setting
Traverse function	592	A300	Traverse function selection	0 to 2	1	0		373	
	593	A301	Maximum amplitude amount	0 to 25%	0.1%	10%		373	
	594	A302	Amplitude compensation amount during deceleration	0 to 50%	0.1%	10%		373	
	595	A303	Amplitude compensation amount during acceleration	0 to 50%	0.1%	10%		373	
	596	A304	Amplitude acceleration time	0.1 to 3600 s	0.1 s	5 s		373	
	597	A305	Amplitude deceleration time	0.1 to 3600 s	0.1 s	5 s		373	
—	598 *13	H102	Undervoltage level	350 to 430 V, 9999	0.1 V	9999		234	
—	599	T721	X10 terminal input selection	0, 1	1	0 *10*12 1 *11		508	
Electronic thermal O/L relay	600	H001	First free thermal reduction frequency 1	0 to 590 Hz, 9999	0.01 Hz	9999		225	
	601	H002	First free thermal reduction ratio 1	1 to 100%	1%	100%		225	
	602	H003	First free thermal reduction frequency 2	0 to 590 Hz, 9999	0.01 Hz	9999		225	
	603	H004	First free thermal reduction ratio 2	1 to 100%	1%	100%		225	
	604	H005	First free thermal reduction frequency 3	0 to 590 Hz, 9999	0.01 Hz	9999		225	
—	606	T722	Power failure stop external signal input selection	0, 1	1	1		426	
—	607	H006	Motor permissible load level	110 to 250%	1%	150%		225	
—	608	H016	Second motor permissible load level	110 to 250%, 9999	1%	9999		225	
PID control	609	A624	PID set point/deviation input selection	1 to 5	1	2		378	
	610	A625	PID measured value input selection	1 to 5, 101 to 105	1	3		378	
—	611	F003	Acceleration time at a restart	0 to 3600 s, 9999	0.1 s	9999		414, 420	
Speed smoothing control	653	G410	Speed smoothing control	0 to 200%	0.1%	0%		519	
	654	G411	Speed smoothing cutoff frequency	0 to 120 Hz	0.01 Hz	20 Hz		519	
Analog remote output function	655	M530	Analog remote output selection	0, 1, 10, 11	1	0		300	
	656	M531	Analog remote output 1	800 to 1200%	0.1%	1000%		300	
	657	M532	Analog remote output 2	800 to 1200%	0.1%	1000%		300	
	658	M533	Analog remote output 3	800 to 1200%	0.1%	1000%		300	
	659	M534	Analog remote output 4	800 to 1200%	0.1%	1000%		300	
Increased magnetic excitation deceleration	660	G130	Increased magnetic excitation deceleration operation selection	0, 1	1	0		517	
	661	G131	Magnetic excitation increase rate	0 to 40%, 9999	0.1%	9999		517	
	662	G132	Increased magnetic excitation current level	0 to 300%	0.1%	100%		517	
—	663	M060	Control circuit temperature signal output level	0 to 100°C	1°C	0°C		304	
—	665	G125	Regeneration avoidance frequency gain	0 to 200%	0.1%	100%		514	
—	668	A786	Power failure stop frequency gain	0 to 200%	0.1%	100%		426	
—	673	G060	SF-PR slip amount adjustment operation selection	2, 4, 6, 9999	1	9999		502	
—	674	G061	SF-PR slip amount adjustment gain	0 to 500%	0.1%	100%		502	
—	684	C000	Tuning data unit switchover	0, 1	1	0		341, 351	

Function	Pr.	Pr. group	Name	Setting range	Minimum setting increments	Initial value		Refer to page	Customer setting
						FM	CA		
Maintenance	686	E712	Maintenance timer 2	0 (1 to 9998)	1	0		184	
	687	E713	Maintenance timer 2 warning output set time	0 to 9998, 9999	1	9999		184	
	688	E714	Maintenance timer 3	0 (1 to 9998)	1	0		184	
	689	E715	Maintenance timer 3 warning output set time	0 to 9998, 9999	1	9999		184	
Electronic thermal O/L relay	692	H011	Second free thermal reduction frequency 1	0 to 590 Hz, 9999	0.01 Hz	9999		225	
	693	H012	Second free thermal reduction ratio 1	1 to 100%	1%	100%		225	
	694	H013	Second free thermal reduction frequency 2	0 to 590 Hz, 9999	0.01 Hz	9999		225	
	695	H014	Second free thermal reduction ratio 2	1 to 100%	1%	100%		225	
	696	H015	Second free thermal reduction frequency 3	0 to 590 Hz, 9999	0.01 Hz	9999		225	
—	699	T740	Input terminal filter	5 to 50 ms, 9999	1 ms	9999		329	
Motor constants	702	C106	Maximum motor frequency	0 to 400 Hz, 9999	0.01 Hz	9999		351	
	706	C130	Induced voltage constant (phi f)	0 to 5000 mV/(rad/s), 9999	0.1 mV/(rad/s)	9999		351	
	707	C107	Motor inertia (integer)	10 to 999, 9999	1	9999		351	
	711	C131	Motor Ld decay ratio	0 to 100%, 9999	0.1%	9999		351	
	712	C132	Motor Lq decay ratio	0 to 100%, 9999	0.1%	9999		351	
	717	C182	Starting resistance tuning compensation	0 to 200%, 9999	0.1%	9999		351	
	721	C185	Starting magnetic pole position detection pulse width	0 to 6000 μs, 10000 to 16000 μs, 9999	1 μs	9999		351	
	724	C108	Motor inertia (exponent)	0 to 7, 9999	1	9999		351	
	725	C133	Motor protection current level	100 to 500%, 9999	0.1%	9999		351	
BACnet MS/TP protocol	726	N050	Auto Baudrate/Max Master	0 to 255	1	255		480	
	727	N051	Max Info Frames	1 to 255	1	1		480	
	728	N052	Device instance number (Upper 3 digits)	0 to 419 (0 to 418)	1	0		480	
	729	N053	Device instance number (Lower 4 digits)	0 to 9999 (0 to 4302)	1	0		480	
Motor constants	738	C230	Second motor induced voltage constant (phi f)	0 to 5000 mV/(rad/s), 9999	0.1 mV/(rad/s)	9999		351	
	739	C231	Second motor Ld decay ratio	0 to 100%, 9999	0.1%	9999		351	
	740	C232	Second motor Lq decay ratio	0 to 100%, 9999	0.1%	9999		351	
	741	C282	Second starting resistance tuning compensation	0 to 200%, 9999	0.1%	9999		351	
	742	C285	Second motor magnetic pole detection pulse width	0 to 6000 μs, 10000 to 16000 μs, 9999	1 μs	9999		351	
	743	C206	Second motor maximum frequency	0 to 400 Hz, 9999	0.01 Hz	9999		351	
	744	C207	Second motor inertia (integer)	10 to 999, 9999	1	9999		351	
	745	C208	Second motor inertia (exponent)	0 to 7, 9999	1	9999		351	
	746	C233	Second motor protection current level	100 to 500%, 9999	0.1%	9999		351	
PID control	753	A650	Second PID action selection	0, 10, 11, 20, 21, 50, 51, 60, 61, 70, 71, 80, 81, 90, 91, 100, 101, 1000, 1001, 1010, 1011, 2000, 2001, 2010, 2011	1	0		378	
	754	A652	Second PID control automatic switchover frequency	0 to 590 Hz, 9999	0.01 Hz	9999		378	
	755	A651	Second PID action set point	0 to 100%, 9999	0.01%	9999		378	
	756	A653	Second PID proportional band	0.1 to 1000%, 9999	0.1%	100%		378	
	757	A654	Second PID integral time	0.1 to 3600 s, 9999	0.1 s	1 s		378	
	758	A655	Second PID differential time	0.01 to 10 s, 9999	0.01 s	9999		378	
	759	A600	PID unit selection	0 to 43, 9999	1	9999		399	

Function	Pr.	Pr. group	Name	Setting range	Minimum setting increments	Initial value FM	Initial value CA	Refer to page	Customer setting
PID pre-charge function	760	A616	Pre-charge fault selection	0, 1	1	0		402	
	761	A617	Pre-charge ending level	0 to 100%, 9999	0.1%	9999		402	
	762	A618	Pre-charge ending time	0 to 3600 s, 9999	0.1 s	9999		402	
	763	A619	Pre-charge upper detection level	0 to 100%, 9999	0.1%	9999		402	
	764	A620	Pre-charge time limit	0 to 3600 s, 9999	0.1 s	9999		402	
	765	A656	Second pre-charge fault selection	0, 1	1	0		402	
	766	A657	Second pre-charge ending level	0 to 100%, 9999	0.1%	9999		402	
	767	A658	Second pre-charge ending time	0 to 3600 s, 9999	0.1 s	9999		402	
	768	A659	Second pre-charge upper detection level	0 to 100%, 9999	0.1%	9999		402	
	769	A660	Second pre-charge time limit	0 to 3600 s, 9999	0.1 s	9999		402	
Monitor function	774	M101	Operation panel monitor selection 1	1 to 3, 5 to 14, 17, 18, 20, 23 to 25, 34, 38, 40 to 45, 50 to 57, 61, 62, 64, 67, 68, 81 to 96, 98, 100, 9999	1	9999		263	
	775	M102	Operation panel monitor selection 2		1	9999		263	
	776	M103	Operation panel monitor selection 3		1	9999		263	
—	777	A681 / T053	4 mA input fault operation frequency	0 to 590 Hz, 9999	0.01 Hz	9999		325	
—	778	A682 / T054	4 mA input check filter	0 to 10 s	0.01 s	0 s		325	
—	779	N014	Operation frequency during communication error	0 to 590 Hz, 9999	0.01 Hz	9999		446	
—	791	F070	Acceleration time in low-speed range	0 to 3600 s, 9999	0.1 s	9999		187	
—	792	F071	Deceleration time in low-speed range	0 to 3600 s, 9999	0.1 s	9999		187	
—	799	M520	Pulse increment setting for output power	0.1, 1, 10, 100, 1000 kWh	0.1 kWh	1 kWh		303	
—	800	G200	Control method selection	9, 20	1	20		143	
Adjustment function	820	G211	Speed control P gain 1	0 to 1000%	1%	25%		154	
	821	G212	Speed control integral time 1	0 to 20 s	0.001 s	0.333 s		154	
	822	T003	Speed setting filter 1	0 to 5 s, 9999	0.001 s	9999		313	
	824	G213	Torque control P gain 1 (current loop proportional gain)	0 to 500%	1%	50%		154	
	825	G214	Torque control integral time 1 (current loop integral time)	0 to 500 ms	0.1 ms	40 ms		154	
	827	G216	Torque detection filter 1	0 to 0.1 s	0.001 s	0 s		158	
	828	G224	Parameter for manufacturer setting. Do not set.						
	830	G311	Speed control P gain 2	0 to 1000%, 9999	1%	9999		154	
	831	G312	Speed control integral time 2	0 to 20 s, 9999	0.001 s	9999		154	
	832	T005	Speed setting filter 2	0 to 5 s, 9999	0.001 s	9999		313	
	834	G313	Torque control P gain 2	0 to 500%, 9999	1%	9999		154	
	835	G314	Torque control integral time 2	0 to 500 ms, 9999	0.1 ms	9999		154	
	837	G316	Torque detection filter 2	0 to 0.1 s, 9999	0.001 s	9999		158	
Additional function	849	T007	Analog input offset adjustment	0 to 200%	0.1%	100%		313	
	858	T040	Terminal 4 function assignment	0, 4, 9999	1	0		248, 310	
	859	C126	Torque current/Rated PM motor current	0 to 500 A, 9999 *2 0 to 3600 A, 9999 *3	0.01 A *2 0.1 A *3	9999		341, 351	
	860	C226	Second motor torque current/Rated PM motor current	0 to 500 A, 9999 *2 0 to 3600 A, 9999 *3	0.01 A *2 0.1 A *3	9999		341, 351	
	864	M470	Torque detection	0 to 400%	0.1%	150%		298	
Indication function	866	M042	Torque monitoring reference	0 to 400%	0.1%	150%		273	
—	867	M321	AM output filter	0 to 5 s	0.01 s	0.01 s		279	
—	868	T010	Terminal 1 function assignment	0, 4, 9999	1	0		248, 310	
—	869	M334	Current output filter	0 to 5 s	0.01 s	—	0.02 s	279	

Function	Pr.	Pr. group	Name	Setting range	Minimum setting increments	Initial value FM	Initial value CA	Refer to page	Customer setting
—	870	M440	Speed detection hysteresis	0 to 5 Hz	0.01 Hz	0 Hz		294	
Protective Functions	872 *12	H201	Input phase loss protection selection	0, 1	1	0		235	
	874	H730	OLT level setting	0 to 400%	0.1%	120%	110%	248	
Regeneration avoidance function	882	G120	Regeneration avoidance operation selection	0 to 2	1	0		514	
	883	G121	Regeneration avoidance operation level	300 to 800 V	0.1V	DC380 V *7 DC760 V *8		514	
	884	G122	Regeneration avoidance at deceleration detection sensitivity	0 to 5	1	0		514	
	885	G123	Regeneration avoidance compensation frequency limit value	0 to 590 Hz, 9999	0.01 Hz	6 Hz		514	
	886	G124	Regeneration avoidance voltage gain	0 to 200%	0.1%	100%		514	
Free parameters	888	E420	Free parameter 1	0 to 9999	1	9999		173	
	889	E421	Free parameter 2	0 to 9999	1	9999		173	
Energy saving monitor	891	M023	Cumulative power monitor digit shifted times	0 to 4, 9999	1	9999		263, 283	
	892	M200	Load factor	30 to 150%	0.1%	100%		283	
	893	M201	Energy saving monitor reference (motor capacity)	0.1 to 55 kW *2 0 to 3600 kW *3	0.01 kW *2 0.1 kW *3	Rated inverter capacity		283	
	894	M202	Control selection during commercial power-supply operation	0 to 3	1	0		283	
	895	M203	Power saving rate reference value	0, 1, 9999	1	9999		283	
	896	M204	Power unit cost	0 to 500, 9999	0.01	9999		283	
	897	M205	Power saving monitor average time	0 to 1000 h, 9999	1 h	9999		283	
	898	M206	Power saving cumulative monitor clear	0, 1, 10, 9999	1	9999		283	
	899	M207	Operation time rate (estimated value)	0 to 100%, 9999	0.1%	9999		283	

Function	Pr.	Pr. group	Name	Setting range	Minimum setting increments	Initial value		Refer to page	Customer setting
						FM	CA		
Calibration parameters	C0 (900) *9	M310	FM/CA terminal calibration	–	–	–		279	
	C1 (901) *9	M320	AM terminal calibration	–	–	–		279	
	C2 (902) *9	T200	Terminal 2 frequency setting bias frequency	0 to 590 Hz	0.01 Hz	0 Hz		314	
	C3 (902) *9	T201	Terminal 2 frequency setting bias	0 to 300%	0.1%	0%		314	
	125 (903) *9	T202	Terminal 2 frequency setting gain frequency	0 to 590 Hz	0.01 Hz	60 Hz	50 Hz	314	
	C4 (903) *9	T203	Terminal 2 frequency setting gain	0 to 300%	0.1%	100%		314	
	C5 (904) *9	T400	Terminal 4 frequency setting bias frequency	0 to 590 Hz	0.01 Hz	0 Hz		314	
	C6 (904) *9	T401	Terminal 4 frequency setting bias	0 to 300%	0.1%	20%		314	
	126 (905) *9	T402	Terminal 4 frequency setting gain frequency	0 to 590 Hz	0.01 Hz	60 Hz	50 Hz	314	
	C7 (905) *9	T403	Terminal 4 frequency setting gain	0 to 300%	0.1%	100%		314	
	C12 (917) *9	T100	Terminal 1 bias frequency (speed)	0 to 590 Hz	0.01 Hz	0 Hz		314	
	C13 (917) *9	T101	Terminal 1 bias (speed)	0 to 300%	0.1%	0%		314	
	C14 (918) *9	T102	Terminal 1 gain frequency (speed)	0 to 590 Hz	0.01 Hz	60 Hz	50 Hz	314	
	C15 (918) *9	T103	Terminal 1 gain (speed)	0 to 300%	0.1%	100%		314	
	C16 (919) *9	T110	Terminal 1 bias command (torque)	0 to 400%	0.1%	0%		320	
	C17 (919) *9	T111	Terminal 1 bias (torque)	0 to 300%	0.1%	0%		320	
	C18 (920) *9	T112	Terminal 1 gain command (torque)	0 to 400%	0.1%	150%		320	
	C19 (920) *9	T113	Terminal 1 gain (torque)	0 to 300%	0.1%	100%		320	
	C8 (930) *9	M330	Current output bias signal	0 to 100%	0.1%	–		279	

Function	Pr.	Pr. group	Name	Setting range	Minimum setting increments	Initial value		Refer to page	Customer setting
						FM	CA		
Calibration parameters	C9 (930) *9	M331	Current output bias current	0 to 100%	0.1%	—	0%	279	
	C10 (931) *9	M332	Current output gain signal	0 to 100%	0.1%	—	100%	279	
	C11 (931) *9	M333	Current output gain current	0 to 100%	0.1%	—	100%	279	
	C38 (932) *9	T410	Terminal 4 bias command (torque)	0 to 400%	0.1%	0%		320	
	C39 (932) *9	T411	Terminal 4 bias (torque)	0 to 300%	0.1%	20%		320	
	C40 (933) *9	T412	Terminal 4 gain command (torque)	0 to 400%	0.1%	150%		320	
	C41 (933) *9	T413	Terminal 4 gain (torque)	0 to 300%	0.1%	100%		320	
	C42 (934) *9	A630	PID display bias coefficient	0 to 500, 9999	0.01	9999		399	
	C43 (934) *9	A631	PID display bias analog value	0 to 300%	0.1%	20%		399	
	C44 (935) *9	A632	PID display gain coefficient	0 to 500, 9999	0.01	9999		399	
	C45 (935) *9	A633	PID display gain analog value	0 to 300%	0.1%	100%		399	
—	977	E302	Input voltage mode selection	0, 1	1	0		168	
—	989	E490	Parameter copy alarm release	10 *2 100 *3	1	10 *2 100 *3		521	
PU	990	E104	PU buzzer control	0, 1	1	1		164	
	991	E105	PU contrast adjustment	0 to 63	1	58		165	
Monitor function	992	M104	Operation panel setting dial push monitor selection	0 to 3, 5 to 14, 17, 18, 20, 23 to 25, 34, 38, 40 to 45, 50 to 57, 61, 62, 64, 67, 68, 81 to 96, 98, 100	1	0		263	
—	997	H103	Fault initiation	0 to 255, 9999	1	9999		235	
—	998	E430	PM parameter initialization Simple	0, 12, 112, 8009, 8109, 9009, 9109	1	0		149	
—	999	E431	Automatic parameter setting Simple	1, 2, 10, 11, 12, 13, 20, 21, 9999	1	9999		173	
—	1000	E108	Parameter for manufacturer setting. Do not set.						
—	1002	C150	Lq tuning target current adjustment coefficient	50 to 150%, 9999	0.1%	9999		351	
Clock function	1006	E020	Clock (year)	2000 to 2099	1	2000		160	
	1007	E021	Clock (month, day)	1/1 to 12/31	1	101		160	
	1008	E022	Clock (hour, minute)	0:00 to 23:59	1	0		160	
—	1013 *12	H323	Emergency drive running speed after retry reset	0 to 590 Hz	0.01 Hz	60 Hz	50 Hz	238	
—	1015	A607	Integral stop selection at limited frequency	0, 1, 10, 11	1	0		378	
—	1016	H021	PTC thermistor protection detection time	0 to 60 s	1 s	0		225	

Function	Pr.	Pr. group	Name	Setting range	Minimum setting increments	Initial value		Refer to page	Customer setting
						FM	CA		
Trace function	1020	A900	Trace operation selection	0 to 4	1	0		433	
	1021	A901	Trace mode selection	0 to 2	1	0		433	
	1022	A902	Sampling cycle	0 to 9	1	2		433	
	1023	A903	Number of analog channels	1 to 8	1	4		433	
	1024	A904	Sampling auto start	0, 1	1	0		433	
	1025	A905	Trigger mode selection	0 to 4	1	0		433	
	1026	A906	Number of sampling before trigger	0 to 100%	1%	90%		433	
	1027	A910	Analog source selection (1ch)	1 to 3, 5 to 14, 17, 18, 20, 23, 24, 34, 40 to 42, 52 to 54, 61, 62, 64, 67, 68, 81 to 96, 98, 201 to 213, 230 to 232, 237, 238	1	201		433	
	1028	A911	Analog source selection (2ch)			202		433	
	1029	A912	Analog source selection (3ch)			203		433	
	1030	A913	Analog source selection (4ch)			204		433	
	1031	A914	Analog source selection (5ch)			205		433	
	1032	A915	Analog source selection (6ch)			206		433	
	1033	A916	Analog source selection (7ch)			207		433	
	1034	A917	Analog source selection (8ch)			208		433	
	1035	A918	Analog trigger channel	1 to 8	1	1		433	
	1036	A919	Analog trigger operation selection	0, 1	1	0		433	
	1037	A920	Analog trigger level	600 to 1400	1	1000		433	
	1038	A930	Digital source selection (1ch)	1 to 255	1	1		433	
	1039	A931	Digital source selection (2ch)			2		433	
	1040	A932	Digital source selection (3ch)			3		433	
	1041	A933	Digital source selection (4ch)			4		433	
	1042	A934	Digital source selection (5ch)			5		433	
	1043	A935	Digital source selection (6ch)			6		433	
	1044	A936	Digital source selection (7ch)			7		433	
	1045	A937	Digital source selection (8ch)			8		433	
	1046	A938	Digital trigger channel	1 to 8	1	1		433	
	1047	A939	Digital trigger operation selection	0, 1	1	0		433	
—	1048	E106	Display-off waiting time	0 to 60 min	1 min	0		165	
—	1049	E110	USB host reset	0, 1	1	0		540	
Monitor function	1106	M050	Torque monitor filter	0 to 5 s, 9999	0.01 s	9999		263	
	1107	M051	Running speed monitor filter	0 to 5 s, 9999	0.01 s	9999		263	
	1108	M052	Excitation current monitor filter	0 to 5 s, 9999	0.01 s	9999		263	

Function	Pr.	Pr. group	Name	Setting range	Minimum setting increments	Initial value		Refer to page	Customer setting
						FM	CA		
PID control	1132	A626	Pre-charge change increment amount	0 to 100%, 9999	0.01%	9999		402	
	1133	A666	Second pre-charge change increment amount	0 to 100%, 9999	0.01%	9999		402	
	1134	A605	Parameter for manufacturer setting. Do not set.						
	1135	A606							
	1136	A670	Second PID display bias coefficient	0 to 500, 9999	0.01	9999		399	
	1137	A671	Second PID display bias analog value	0 to 300%	0.1%	20%		399	
	1138	A672	Second PID display gain coefficient	0 to 500, 9999	0.01	9999		399	
	1139	A673	Second PID display gain analog value	0 to 300%	0.1%	100%		399	
	1140	A664	Second PID set point/deviation input selection	1 to 5	1	2		378	
	1141	A665	Second PID measured value input selection	1 to 5, 101 to 105	1	3		378	
	1142	A640	Second PID unit selection	0 to 43, 9999	1	9999		378	
	1143	A641	Second PID upper limit	0 to 100%, 9999	0.1%	9999		378	
	1144	A642	Second PID lower limit	0 to 100%, 9999	0.1%	9999		378	
	1145	A643	Second PID deviation limit	0 to 100%, 9999	0.1%	9999		378	
	1146	A644	Second PID signal operation selection	0 to 3, 10 to 13	1	0		378	
	1147	A661	Second output interruption detection time	0 to 3600 s, 9999	0.1 s	1		378	
	1148	A662	Second output interruption detection level	0 to 590 Hz	0.01 Hz	0 Hz		378	
	1149	A663	Second output interruption cancel level	900 to 1100%	0.1%	1000%		378	
PLC function	1150 to 1199	A810 to A859	PLC function user parameters 1 to 50	0 to 65535	1	0		431	
PID gain tuning	1211	A690	PID gain tuning timeout time	1 to 9999 s	1 s	100 s		394	
	1212	A691	Step manipulated amount	900 to 1100%	0.1%	1000%		394	
	1213	A692	Step responding sampling cycle	0.01 to 600 s	0.01 s	1 s		394	
	1214	A693	Timeout time after the maximum slope	1 to 9999 s	1 s	10 s		394	
	1215	A694	Limit cycle output upper limit	900 to 1100%	0.1%	1100%		394	
	1216	A695	Limit cycle output lower limit	900 to 1100%	0.1%	1000%		394	
	1217	A696	Limit cycle hysteresis	0.1 to 10%	0.1%	1%		394	
	1218	A697	PID gain tuning setting	0, 100 to 102, 111, 112, 121, 122, 200 to 202, 211, 212, 221, 222	1	0		394	
	1219	A698	PID gain tuning start/status	(0), 1, 8, (9, 90 to 96)	1	0		394	
—	1300 to 1343, 1350 to 1359	N500 to N543, N550 to N559	Communication option parameters. For details, refer to the Instruction Manual of the option.						

Function	Pr.	Pr. group	Name	Setting range	Minimum setting increments	Initial value		Refer to page	Customer setting
						FM	CA		
PID gain tuning	1460	A683	PID multistage set point 1	0 to 100%, 9999	0.01%	9999		378	
	1461	A684	PID multistage set point 2	0 to 100%, 9999	0.01%	9999		378	
	1462	A685	PID multistage set point 3	0 to 100%, 9999	0.01%	9999		378	
	1463	A686	PID multistage set point 4	0 to 100%, 9999	0.01%	9999		378	
	1464	A687	PID multistage set point 5	0 to 100%, 9999	0.01%	9999		378	
	1465	A688	PID multistage set point 6	0 to 100%, 9999	0.01%	9999		378	
	1466	A689	PID multistage set point 7	0 to 100%, 9999	0.01%	9999		378	
Cleaning	1469	A420	Number of cleaning times monitor	0 to 255	1	0		375	
	1470	A421	Number of cleaning times setting	0 to 255	1	0		375	
	1471	A422	Cleaning trigger selection	0 to 15	1	0		375	
	1472	A423	Cleaning reverse rotation frequency	0 to 590 Hz	0.01 Hz	30 Hz		375	
	1473	A424	Cleaning reverse rotation operation time	0 to 3600 s	0.1 s	5 s		375	
	1474	A425	Cleaning forward rotation frequency	0 to 590 Hz, 9999	0.01 Hz	9999		375	
	1475	A426	Cleaning forward rotation operation time	0 to 3600 s, 9999	0.1 s	9999		375	
	1476	A427	Cleaning stop time	0 to 3600 s	0.1 s	5 s		375	
	1477	A428	Cleaning acceleration time	0 to 3600 s, 9999	0.1 s	9999		375	
	1478	A429	Cleaning deceleration time	0 to 3600 s, 9999	0.1 s	9999		375	
	1479	A430	Cleaning time trigger	0 to 6000 h	0.1 h	0 h		375	
Load characteristics fault detection	1480	H520	Load characteristics measurement mode	0, 1 (2 to 5, 81 to 85)	1	0		255	
	1481	H521	Load characteristics load reference 1	0 to 400%, 8888, 9999	0.1%	9999		255	
	1482	H522	Load characteristics load reference 2	0 to 400%, 8888, 9999	0.1%	9999		255	
	1483	H523	Load characteristics load reference 3	0 to 400%, 8888, 9999	0.1%	9999		255	
	1484	H524	Load characteristics load reference 4	0 to 400%, 8888, 9999	0.1%	9999		255	
	1485	H525	Load characteristics load reference 5	0 to 400%, 8888, 9999	0.1%	9999		255	
	1486	H526	Load characteristics maximum frequency	0 to 590 Hz	0.01 Hz	60 Hz	50 Hz	255	
	1487	H527	Load characteristics minimum frequency	0 to 590 Hz	0.01 Hz	6 Hz		255	
	1488	H530	Upper limit warning detection width	0 to 400%, 9999	0.1%	20%		255	
	1489	H531	Lower limit warning detection width	0 to 400%, 9999	0.1%	20%		255	
	1490	H532	Upper limit fault detection width	0 to 400%, 9999	0.1%	9999		255	
	1491	H533	Lower limit fault detection width	0 to 400%, 9999	0.1%	9999		255	
	1492	H534	Load status detection signal delay time / load reference measurement waiting time	0 to 60 s	0.1 s	1 s		255	
Clear parameters	Pr.CLR		Parameter clear	(0), 1	1	0		520	
	ALL.CL		All parameter clear	(0), 1	1	0		520	
	Err.CL		Fault history clear	(0), 1	1	0		531	

Function	Pr.	Pr. group	Name	Setting range	Minimum setting increments	Initial value		Refer to page	Customer setting
						FM	CA		
—	Pr.CPY		Parameter copy	(0), 1 to 3	1	0		521	
—	Pr.CHG		Initial value change list	—	1	0		527	
—	IPM		IPM initialization	0, 12	1	0		149	
—	AUTO		Automatic parameter setting	—	—	—		173	
—	Pr.MD		Group parameter setting	(0), 1, 2	1	0		133	

∗1 Differ according to capacities.
6%: FR-F820-00046(0.75K), FR-F840-00023(0.75K)
4%: FR-F820-00077(1.5K) to FR-F820-00167(3.7K), FR-F840-00038(1.5K) to FR-F840-00083(3.7K)
3%: FR-F820-00250(5.5K), FR-F820-00340(7.5K), FR-F840-00126(5.5K), FR-F840-00170(7.5K)
2%: FR-F820-00490(11K) to FR-F820-01540(37K), FR-F840-00250(11K) to FR-F840-00770(37K)
1.5%: FR-F820-01870(45K), FR-F820-02330(55K), FR-F840-00930(45K), FR-F840-01160(55K)
1%: FR-F820-03160(75K) or higher, FR-F840-01800(75K) or higher
∗2 The setting range or initial value for the FR-F820-02330(55K) or lower and FR-F840-01160(55K) or lower.
∗3 The setting range or initial value for the FR-F820-03160(75K) or higher and FR-F840-01800(75K) or higher.
∗4 The initial value for the FR-F820-00340(7.5K) or lower and FR-F840-00170(7.5K) or lower.
∗5 The initial value for the FR-F820-00490(11K) or higher and FR-F840-00250(11K) or higher.
∗6 Differ according to capacities.
4%: FR-F820-00340(7.5K) or lower, FR-F840-00170(7.5K) or lower
2%: FR-F820-00490(11K) to FR-F820-02330(55K), FR-F840-00250(11K) to FR-F840-01160(55K)
1%: FR-F820-03160(75K) or higher, FR-F840-01800(75K) or higher
∗7 The value for the 200 V class.
∗8 The value for the 400 V class.
∗9 The parameter number in parentheses is the one for use with the LCD operation panel and the parameter unit.
∗10 The setting range or initial value for the standard model.
∗11 The setting range or initial value for the separated converter type.
∗12 The setting is available for the standard model only.
∗13 The setting is available only with the 400 V class.

5.1.2 Group parameter display

Parameter numbers can be changed to grouped parameter numbers.
Parameters are grouped by their functions. The related parameters can be set easily.

◆Changing to the grouped parameter numbers

Pr.MD setting value	Description
0	Default parameter display method
1	Parameter display by parameter number
2	Parameter display by function group

Operation

1. Screen at power-ON
The monitor display appears.

2. Parameter setting mode
Press MODE to choose the parameter setting mode. (The parameter number read previously appears.)

3. Selecting the parameter number
Turn the dial until "PrMd" (parameter display method) appears.
Press SET. "0" (initial value) will appear.

4. Changing to the group parameter display
Turn the dial to change the set value to "2" (group parameter display). Press SET to select the group parameter setting.
"2" and "PrMd" flicker alternately after the setting is completed.

◆Changing parameter settings in the group parameter display

Changing example | Change the **P.H400(Pr.1) Maximum frequency**.

Operation

1. Screen at power-ON
The monitor display appears.

2. Changing the operation mode
Press PU/EXT to choose the PU operation mode. [PU] indicator is on.

3. Parameter setting mode
Press MODE to choose the parameter setting mode. (The parameter number read previously appears.)

4. Parameter group selection
Press ESC several times until "PH0" appears. Parameter groups can now be selected.

5. Parameter group selection
Turn the dial until "PH4" (protective function parameter 4) appears. Press SET to display "PH4--" and make the group parameters of the protective function parameter 4 selectable.

6. Parameter selection
Turn the dial until "PH400" (**P.H400 Maximum frequency**) appears. Press SET to read the present set value.
"120.00" (initial value) appears.

7. Changing the setting value
Turn the dial to change the set value to "60.00". Press SET to enter the setting. "60.00" and "PH400" flicker alternately after the setting is completed.

5.1.3 Parameter list (by function group)

◆ E: Environment setting parameters

Parameters that set the inverter operation characteristics.

Pr. group	Pr.	Name	Refer to page
E000	168	Parameter for manufacturer setting. Do not set.	
E001	169	Parameter for manufacturer setting. Do not set.	
E020	1006	Clock (year)	160
E021	1007	Clock (month, day)	160
E022	1008	Clock (hour, minute)	160
E023	269	Parameter for manufacturer setting. Do not set.	
E080	168	Parameter for manufacturer setting. Do not set.	
E081	169	Parameter for manufacturer setting. Do not set.	
E100	75	Reset selection	162
E101	75	Disconnected PU detection	162
E102	75	PU stop selection	162
E103	145	PU display language selection	164
E104	990	PU buzzer control	164
E105	991	PU contrast adjustment	165
E106	1048	Display-off waiting time	165
E107	75	Reset limit	162
E108	1000	Parameter for manufacturer setting. Do not set.	
E110	1049	USB host reset	540
E200	161	Frequency setting/key lock operation selection	166
E201	295	Frequency change increment amount setting	167
E300	30	Regenerative function selection	508
E301	570	Multiple rating setting	168
E302	977	Input voltage mode selection	168
E400	77	Parameter write selection	169
E410	296	Password lock level	171
E411	297	Password lock/unlock	171
E420	888	Free parameter 1	173
E421	889	Free parameter 2	173
E430	998	PM parameter initialization Simple	149
E431	999	Automatic parameter setting Simple	173
E440	160	User group read selection Simple	177
E441	172	User group registered display/batch clear	177
E442	173	User group registration	177
E443	174	User group clear	177
E490	989	Parameter copy alarm release	521
E600	72	PWM frequency selection	179
E601	240	Soft-PWM operation selection	179
E602	260	PWM frequency automatic switchover	179
E700	255	Life alarm status display	180
E701	256 *2	Inrush current limit circuit life display	180
E702	257	Control circuit capacitor life display	180
E703	258 *2	Main circuit capacitor life display	180
E704	259 *2	Main circuit capacitor life measuring	180
E710	503	Maintenance timer 1	184
E711	504	Maintenance timer 1 warning output set time	184
E712	686	Maintenance timer 2	184
E713	687	Maintenance timer 2 warning output set time	184
E714	688	Maintenance timer 3	184
E715	689	Maintenance timer 3 warning output set time	184
E720	555	Current average time	185
E721	556	Data output mask time	185
E722	557	Current average value monitor signal output reference current	185

◆ F: Setting of acceleration/deceleration time and acceleration/deceleration pattern

Parameters that set the motor acceleration/deceleration characteristics.

Pr. group	Pr.	Name	Refer to page
F000	20	Acceleration/deceleration reference frequency	187
F001	21	Acceleration/deceleration time increments	187
F002	16	Jog acceleration/deceleration time	221
F003	611	Acceleration time at a restart	414, 420
F010	7	Acceleration time Simple	187
F011	8	Deceleration time Simple	187
F020	44	Second acceleration/deceleration time	187
F021	45	Second deceleration time	187
F022	147	Acceleration/deceleration time switching frequency	187
F040	1103	Deceleration time at emergency stop	187
F070	791	Acceleration time in low-speed range	187
F071	792	Deceleration time in low-speed range	187
F100	29	Acceleration/deceleration pattern selection	191
F101	59	Remote function selection	194
F102	13	Starting frequency	197, 198
F103	571	Holding time at a start	197
F200	140	Backlash acceleration stopping frequency	191
F201	141	Backlash acceleration stopping time	191
F202	142	Backlash deceleration stopping frequency	191
F203	143	Backlash deceleration stopping time	191

◆ D: Operation command and frequency command

Parameters that specify the inverter's command source, and parameters that set the motor driving frequency and torque.

Pr. group	Pr.	Name	Refer to page
D000	79	Operation mode selection Simple	200, 209
D001	340	Communication startup mode selection	209
D010	338	Communication operation command source	210
D011	339	Communication speed command source	210
D012	550	NET mode operation command source selection	210
D013	551	PU mode operation command source selection	210
D020	78	Reverse rotation prevention selection	217
D100	291	Pulse train I/O selection	218, 273
D101	384	Input pulse division scaling factor	218
D110	385	Frequency for zero input pulse	218

Pr. group	Pr.	Name	Refer to page
D111	386	Frequency for maximum input pulse	218
D200	15	Jog frequency	221
D300	28	Multi-speed input compensation selection	222
D301	4	Multi-speed setting (high speed) Simple	222
D302	5	Multi-speed setting (middle speed) Simple	222
D303	6	Multi-speed setting (low speed) Simple	222
D304 to D307	24 to 27	Multi-speed setting (4 speed to 7 speed)	222
D308 to D315	232 to 239	Multi-speed setting (8 speed to 15 speed)	222

◆ H: Protective function parameter

Parameters to protect the motor and the inverter.

Pr. group	Pr.	Name	Refer to page
H000	9	Electronic thermal O/L relay Simple	225, 341, 351
H001	600	First free thermal reduction frequency 1	225
H002	601	First free thermal reduction ratio 1	225
H003	602	First free thermal reduction frequency 2	225
H004	603	First free thermal reduction ratio 2	225
H005	604	First free thermal reduction frequency 3	225
H006	607	Motor permissible load level	225
H010	51	Second electronic thermal O/L relay	225, 341, 351
H011	692	Second free thermal reduction frequency 1	225
H012	693	Second free thermal reduction ratio 1	225
H013	694	Second free thermal reduction frequency 2	225
H014	695	Second free thermal reduction ratio 2	225
H015	696	Second free thermal reduction frequency 3	225
H016	608	Second motor permissible load level	225
H020	561	PTC thermistor protection level	225
H021	1016	PTC thermistor protection detection time	225
H100	244	Cooling fan operation selection	233
H101	249	Earth (ground) fault detection at start	234
H102	598	Undervoltage level	234
H103	997	Fault initiation	235
H200	251	Output phase loss protection selection	235
H201	872 *2	Input phase loss protection selection	235
H300	65	Retry selection	236
H301	67	Number of retries at fault occurrence	236
H302	68	Retry waiting time	236
H303	69	Retry count display erase	236
H320	523 *2	Emergency drive mode selection	238
H321	524 *2	Emergency drive running speed	238
H322	515 *2	Emergency drive dedicated retry count	238
H323	1013 *2	Emergency drive running speed after retry reset	238
H324	514 *2	Emergency drive dedicated waiting time	238
H400	1	Maximum frequency Simple	245
H401	2	Minimum frequency Simple	245
H402	18	High speed maximum frequency	245
H420	31	Frequency jump 1A	246
H421	32	Frequency jump 1B	246
H422	33	Frequency jump 2A	246
H423	34	Frequency jump 2B	246
H424	35	Frequency jump 3A	246
H425	36	Frequency jump 3B	246
H429	552	Frequency jump range	246
H500	22	Stall prevention operation level (Torque limit level)	248
H501	156	Stall prevention operation selection	248
H520	1480	Load characteristics measurement mode	255
H521	1481	Load characteristics load reference 1	255
H522	1482	Load characteristics load reference 2	255
H523	1483	Load characteristics load reference 3	255
H524	1484	Load characteristics load reference 4	255
H525	1485	Load characteristics load reference 5	255
H526	1486	Load characteristics maximum frequency	255
H527	1487	Load characteristics minimum frequency	255
H530	1488	Upper limit warning detection width	255
H531	1489	Lower limit warning detection width	255
H532	1490	Upper limit fault detection width	255
H533	1491	Lower limit fault detection width	255
H534	1492	Load status detection signal delay time / load reference measurement waiting time	255
H600	48	Second stall prevention operation level	248
H601	49	Second stall prevention operation frequency	248
H610	23	Stall prevention operation level compensation factor at double speed	248
H611	66	Stall prevention operation reduction starting frequency	248
H620	148	Stall prevention level at 0 V input	248
H621	149	Stall prevention level at 10 V input	248
H631	154	Voltage reduction selection during stall prevention operation	248
H730	874	OLT level setting	248
H800	374	Overspeed detection level	259

◆ M: Monitor display and monitor output signal

Parameters regarding the inverter's operating status. These parameters are used to set the monitors and output signals.

Pr. group	Pr.	Name	Refer to page
M000	37	Speed display	261
M001	505	Speed setting reference	261
M002	144	Speed setting switchover	261
M020	170	Watt-hour meter clear	263
M021	563	Energization time carrying-over times	263
M022	268	Monitor decimal digits selection	263
M023	891	Cumulative power monitor digit shifted times	263, 283
M030	171	Operation hour meter clear	263
M031	564	Operating time carrying-over times	263
M040	55	Frequency monitoring reference	273
M041	56	Current monitoring reference	273
M042	866	Torque monitoring reference	273
M043	241	Analog input display unit switchover	314
M044	290	Monitor negative output selection	263, 273
M050	1106	Torque monitor filter	263

Pr. group	Pr.	Name	Refer to page
M051	1107	Running speed monitor filter	263
M052	1108	Excitation current monitor filter	263
M060	663	Control circuit temperature signal output level	304
M100	52	Operation panel main monitor selection	263
M101	774	Operation panel monitor selection 1	263
M102	775	Operation panel monitor selection 2	263
M103	776	Operation panel monitor selection 3	263
M104	992	Operation panel setting dial push monitor selection	263
M200	892	Load factor	283
M201	893	Energy saving monitor reference (motor capacity)	283
M202	894	Control selection during commercial power-supply operation	283
M203	895	Power saving rate reference value	283
M204	896	Power unit cost	283
M205	897	Power saving monitor average time	283
M206	898	Power saving cumulative monitor clear	283
M207	899	Operation time rate (estimated value)	283
M300	54	FM/CA terminal function selection	273
M301	158	AM terminal function selection	273
M310	C0 (900) *1	FM/CA terminal calibration	279
M320	C1 (901) *1	AM terminal calibration	279
M321	867	AM output filter	279
M330	C8 (930) *1	Current output bias signal	279
M331	C9 (930) *1	Current output bias current	279
M332	C10 (931) *1	Current output gain signal	279
M333	C11 (931) *1	Current output gain current	279
M334	869	Current output filter	279
M400	190	RUN terminal function selection	288
M401	191	SU terminal function selection	288
M402	192	IPF terminal function selection	288
M403	193	OL terminal function selection	288
M404	194	FU terminal function selection	288
M405	195	ABC1 terminal function selection	288
M406	196	ABC2 terminal function selection	288
M430	157	OL signal output timer	248
M431	289	Inverter output terminal filter	288
M433	166	Output current detection signal retention time	296
M440	870	Speed detection hysteresis	294
M441	41	Up-to-frequency sensitivity	294
M442	42	Output frequency detection	294
M443	43	Output frequency detection for reverse rotation	294
M444	50	Second output frequency detection	294
M460	150	Output current detection level	296
M461	151	Output current detection signal delay time	296
M462	152	Zero current detection level	296
M463	153	Zero current detection time	296
M464	167	Output current detection operation selection	296
M470	864	Torque detection	298
M500	495	Remote output selection	298
M501	496	Remote output data 1	298
M502	497	Remote output data 2	298
M510	76	Fault code output selection	302
M520	799	Pulse increment setting for output power	303
M530	655	Analog remote output selection	300
M531	656	Analog remote output 1	300
M532	657	Analog remote output 2	300
M533	658	Analog remote output 3	300
M534	659	Analog remote output 4	300

◆ T: Multi-function input terminal parameters

Parameters for the input terminals where inverter commands are received through.

Pr. group	Pr.	Name	Refer to page
T000	73	Analog input selection	306, 311
T001	267	Terminal 4 input selection	306
T002	74	Input filter time constant	313
T003	822	Speed setting filter 1	313
T005	832	Speed setting filter 2	313
T007	849	Analog input offset adjustment	313
T010	868	Terminal 1 function assignment	248, 310
T021	242	Terminal 1 added compensation amount (terminal 2)	311
T022	125	Terminal 2 frequency setting gain frequency Simple	314
T040	858	Terminal 4 function assignment	248, 310
T041	243	Terminal 1 added compensation amount (terminal 4)	311
T042	126	Terminal 4 frequency setting gain frequency Simple	314
T050	252	Override bias	311
T051	253	Override gain	311
T052	573	4 mA input check selection	325
T053	777	4 mA input fault operation frequency	325
T054	778	4 mA input check filter	325
T100	C12 (917) *1	Terminal 1 bias frequency (speed)	314
T101	C13 (917) *1	Terminal 1 bias (speed)	314
T102	C14 (918) *1	Terminal 1 gain frequency (speed)	314
T103	C15 (918) *1	Terminal 1 gain (speed)	314
T110	C16 (919) *1	Terminal 1 bias command (torque)	320
T111	C17 (919) *1	Terminal 1 bias (torque)	320

Pr. group	Pr.	Name	Refer to page
T112	C18 (920) *1	Terminal 1 gain command (torque)	320
T113	C19 (920) *1	Terminal 1 gain (torque)	320
T200	C2 (902) *1	Terminal 2 frequency setting bias frequency	314
T201	C3 (902) *1	Terminal 2 frequency setting bias	314
T202	125 (903) *1	Terminal 2 frequency setting gain frequency	314
T203	C4 (903) *1	Terminal 2 frequency setting gain	314
T400	C5 (904) *1	Terminal 4 frequency setting bias frequency	314
T401	C6 (904) *1	Terminal 4 frequency setting bias	314
T402	126 (905) *1	Terminal 4 frequency setting gain frequency	314
T403	C7 (905) *1	Terminal 4 frequency setting gain	314
T410	C38 (932) *1	Terminal 4 bias command (torque)	320
T411	C39 (932) *1	Terminal 4 bias (torque)	320
T412	C40 (933) *1	Terminal 4 gain command (torque)	320
T413	C41 (933) *1	Terminal 4 gain (torque)	320
T700	178	STF terminal function selection	329
T701	179	STR terminal function selection	329
T702	180	RL terminal function selection	329
T703	181	RM terminal function selection	329
T704	182	RH terminal function selection	329
T705	183	RT terminal function selection	329
T706	184	AU terminal function selection	329
T707	185	JOG terminal function selection	329
T708	186	CS terminal function selection	329
T709	187	MRS terminal function selection	329
T710	188	STOP terminal function selection	329
T711	189	RES terminal function selection	329
T720	17	MRS input selection	332
T721	599	X10 terminal input selection	508
T722	606	Power failure stop external signal input selection	426
T730	155	RT signal function validity condition selection	333
T740	699	Input terminal filter	329

◆ C: Motor constant parameters

Parameters for the applied motor setting.

Pr. group	Pr.	Name	Refer to page
C000	684	Tuning data unit switchover	341, 351
C100	71	Applied motor	337, 341, 351
C101	80	Motor capacity	143, 341, 351
C102	81	Number of motor poles	143, 341, 351
C103	9	Rated motor current Simple	225, 341, 351
C104	83	Rated motor voltage	143, 341, 351
C105	84	Rated motor frequency	143, 341, 351
C106	702	Maximum motor frequency	351
C107	707	Motor inertia (integer)	351
C108	724	Motor inertia (exponent)	351
C110	96	Auto tuning setting/status	341, 351, 422
C111	95	Online auto tuning selection	359
C120	90	Motor constant (R1)	341, 351, 422
C121	91	Motor constant (R2)	341
C122	92	Motor constant (L1)/d-axis inductance (Ld)	341, 351
C123	93	Motor constant (L2)/q-axis inductance (Lq)	341, 351
C124	94	Motor constant (X)	341
C125	82	Motor excitation current	341
C126	859	Torque current/Rated PM motor current	341, 351
C130	706	Induced voltage constant (phi f)	351
C131	711	Motor Ld decay ratio	351
C132	712	Motor Lq decay ratio	351
C133	725	Motor protection current level	351
C150	1002	Lq tuning target current adjustment coefficient	351
C182	717	Starting resistance tuning compensation	351
C185	721	Starting magnetic pole position detection pulse width	351
C200	450	Second applied motor	337
C201	453	Second motor capacity	341, 351
C202	454	Number of second motor poles	341, 351
C203	51	Rated second motor current	225, 341, 351
C204	456	Rated second motor voltage	341, 351
C205	457	Rated second motor frequency	341, 351
C206	743	Second motor maximum frequency	351
C207	744	Second motor inertia (integer)	351
C208	745	Second motor inertia (exponent)	351

Pr. group	Pr.	Name	Refer to page
C210	463	Second motor auto tuning setting/ status	341, 351, 422
C211	574	Second motor online auto tuning	359
C220	458	Second motor constant (R1)	341, 351, 422
C221	459	Second motor constant (R2)	341
C222	460	Second motor constant (L1) / d-axis inductance (Ld)	341, 351
C223	461	Second motor constant (L2) / q-axis inductance (Lq)	341, 351
C224	462	Second motor constant (X)	341
C225	455	Second motor excitation current	341
C226	860	Second motor torque current/Rated PM motor current	341, 351
C230	738	Second motor induced voltage constant (phi f)	351
C231	739	Second motor Ld decay ratio	351
C232	740	Second motor Lq decay ratio	351
C233	746	Second motor protection current level	351
C282	741	Second starting resistance tuning compensation	351
C285	742	Second motor magnetic pole detection pulse width	351

◆ A: Application parameters

Parameters to set a specific application.

Pr. group	Pr.	Name	Refer to page
A000	135	Electronic bypass sequence selection	363
A001	136	MC switchover interlock time	363
A002	137	Start waiting time	363
A003	138	Bypass selection at a fault	363
A004	139	Automatic switchover frequency from inverter to bypass operation	363
A005	159	Automatic switchover frequency range from bypass to inverter operation	363
A006	248	Self power management selection	370
A007	254	Main circuit power OFF waiting time	370
A300	592	Traverse function selection	373
A301	593	Maximum amplitude amount	373
A302	594	Amplitude compensation amount during deceleration	373
A303	595	Amplitude compensation amount during acceleration	373
A304	596	Amplitude acceleration time	373
A305	597	Amplitude deceleration time	373
A400	578	Auxiliary motor operation selection	406
A401	579	Motor connection function selection	406
A402	580	MC switching interlock time	406
A403	581	Start waiting time	406
A404	582	Auxiliary motor connection-time deceleration time	406
A405	583	Auxiliary motor disconnection-time acceleration time	406
A406	584	Auxiliary motor 1 starting frequency	406
A407	585	Auxiliary motor 2 starting frequency	406
A408	586	Auxiliary motor 3 starting frequency	406
A409	587	Auxiliary motor 1 stopping frequency	406
A410	588	Auxiliary motor 2 stopping frequency	406
A411	589	Auxiliary motor 3 stopping frequency	406
A412	590	Auxiliary motor start detection time	406
A413	591	Auxiliary motor stop detection time	406
A420	1469	Number of cleaning times monitor	375
A421	1470	Number of cleaning times setting	375
A422	1471	Cleaning trigger selection	375
A423	1472	Cleaning reverse rotation frequency	375
A424	1473	Cleaning reverse rotation operation time	375
A425	1474	Cleaning forward rotation frequency	375
A426	1475	Cleaning forward rotation operation time	375
A427	1476	Cleaning stop time	375
A428	1477	Cleaning acceleration time	375
A429	1478	Cleaning deceleration time	375
A430	1479	Cleaning time trigger	375
A600	759	PID unit selection	399
A601	131	PID upper limit	378
A602	132	PID lower limit	378
A603	553	PID deviation limit	378
A604	554	PID signal operation selection	378
A605	1134	Parameter for manufacturer setting. Do not set.	
A606	1135		
A607	1015	Integral stop selection at limited frequency	378
A610	128	PID action selection	378
A611	133	PID action set point	378
A612	127	PID control automatic switchover frequency	378
A613	129	PID proportional band	378
A614	130	PID integral time	378
A615	134	PID differential time	378
A616	760	Pre-charge fault selection	402
A617	761	Pre-charge ending level	402
A618	762	Pre-charge ending time	402
A619	763	Pre-charge upper detection level	402
A620	764	Pre-charge time limit	402
A621	575	Output interruption detection time	378
A622	576	Output interruption detection level	378
A623	577	Output interruption cancel level	378
A624	609	PID set point/deviation input selection	378
A625	610	PID measured value input selection	378
A626	1132	Pre-charge change increment amount	402
A630	C42 (934) *1	PID display bias coefficient	399
A631	C43 (934) *1	PID display bias analog value	399
A632	C44 (935) *1	PID display gain coefficient	399
A633	C45 (935) *1	PID display gain analog value	399
A640	1142	Second PID unit selection	378
A641	1143	Second PID upper limit	378
A642	1144	Second PID lower limit	378
A643	1145	Second PID deviation limit	378
A644	1146	Second PID signal operation selection	378
A650	753	Second PID action selection	378
A651	755	Second PID action set point	378
A652	754	Second PID control automatic switchover frequency	378
A653	756	Second PID proportional band	378
A654	757	Second PID integral time	378

Pr. group	Pr.	Name	Refer to page
A655	758	Second PID differential time	378
A656	765	Second pre-charge fault selection	402
A657	766	Second pre-charge ending level	402
A658	767	Second pre-charge ending time	402
A659	768	Second pre-charge upper detection level	402
A660	769	Second pre-charge time limit	402
A661	1147	Second output interruption detection time	378
A662	1148	Second output interruption detection level	378
A663	1149	Second output interruption cancel level	378
A664	1140	Second PID set point/deviation input selection	378
A665	1141	Second PID measured value input selection	378
A666	1133	Second pre-charge change increment amount	402
A670	1136	Second PID display bias coefficient	399
A671	1137	Second PID display bias analog value	399
A672	1138	Second PID display gain coefficient	399
A673	1139	Second PID display gain analog value	399
A680	573	4 mA input check selection	325
A681	777	4 mA input fault operation frequency	325
A682	778	4 mA input check filter	325
A683	1460	PID multistage set point 1	378
A684	1461	PID multistage set point 2	378
A685	1462	PID multistage set point 3	378
A686	1463	PID multistage set point 4	378
A687	1464	PID multistage set point 5	378
A688	1465	PID multistage set point 6	378
A689	1466	PID multistage set point 7	378
A690	1211	PID gain tuning timeout time	394
A691	1212	Step manipulated amount	394
A692	1213	Step responding sampling cycle	394
A693	1214	Timeout time after the maximum slope	394
A694	1215	Limit cycle output upper limit	394
A695	1216	Limit cycle output lower limit	394
A696	1217	Limit cycle hysteresis	394
A697	1218	PID gain tuning setting	394
A698	1219	PID gain tuning start/status	394
A700	162	Automatic restart after instantaneous power failure selection	414, 420, 422
A701	299	Rotation direction detection selection at restarting	414
A702	57	Restart coasting time	414, 420
A703	58	Restart cushion time	414
A704	163	First cushion time for restart	414
A705	164	First cushion voltage for restart	414
A710	165	Stall prevention operation level for restart	414
A711	298	Frequency search gain	422
A712	560	Second frequency search gain	422
A730	261	Power failure stop selection	426
A731	262	Subtracted frequency at deceleration start	426
A732	263	Subtraction starting frequency	426
A733	264	Power-failure deceleration time 1	426
A734	265	Power-failure deceleration time 2	426
A735	266	Power failure deceleration time switchover frequency	426
A785	294	UV avoidance voltage gain	426
A786	668	Power failure stop frequency gain	426
A800	414	PLC function operation selection	431
A801	415	Inverter operation lock mode setting	431
A802	416	Pre-scale function selection	431
A803	417	Pre-scale setting value	431
A804	498	PLC function flash memory clear	431
A810 to A859	1150 to 1199	PLC function user parameters 1 to 50	431
A900	1020	Trace operation selection	433
A901	1021	Trace mode selection	433
A902	1022	Sampling cycle	433
A903	1023	Number of analog channels	433
A904	1024	Sampling auto start	433
A905	1025	Trigger mode selection	433
A906	1026	Number of sampling before trigger	433
A910	1027	Analog source selection (1ch)	433
A911	1028	Analog source selection (2ch)	433
A912	1029	Analog source selection (3ch)	433
A913	1030	Analog source selection (4ch)	433
A914	1031	Analog source selection (5ch)	433
A915	1032	Analog source selection (6ch)	433
A916	1033	Analog source selection (7ch)	433
A917	1034	Analog source selection (8ch)	433
A918	1035	Analog trigger channel	433
A919	1036	Analog trigger operation selection	433
A920	1037	Analog trigger level	433
A930	1038	Digital source selection (1ch)	433
A931	1039	Digital source selection (2ch)	433
A932	1040	Digital source selection (3ch)	433
A933	1041	Digital source selection (4ch)	433
A934	1042	Digital source selection (5ch)	433
A935	1043	Digital source selection (6ch)	433
A936	1044	Digital source selection (7ch)	433
A937	1045	Digital source selection (8ch)	433
A938	1046	Digital trigger channel	433
A939	1047	Digital trigger operation selection	433

◆ N: Operation via communication and its settings

Parameters for communication operation. These parameters set the communication specifications and operation.

Pr. group	Pr.	Name	Refer to page
N000	549	Protocol selection	446
N001	342	Communication EEPROM write selection	446
N002	539	Modbus-RTU communication check time interval	465
N013	502	Stop mode selection at communication error	446
N014	779	Operation frequency during communication error	446
N020	117	PU communication station number	449
N021	118	PU communication speed	449
N022	119	PU communication data length	449
N023	119	PU communication stop bit length	449

Pr. group	Pr.	Name	Refer to page
N024	120	PU communication parity check	449
N025	121	Number of PU communication retries	449
N026	122	PU communication check time interval	449
N027	123	PU communication waiting time setting	449
N028	124	PU communication CR/LF selection	449
N030	331	RS-485 communication station number	449
N031	332	RS-485 communication speed	449
N032	333	PU communication data length	449
N033	333	PU communication stop bit length	449
N034	334	RS-485 communication parity check selection	449
N035	335	RS-485 communication retry count	449
N036	336	RS-485 communication check time interval	449
N037	337	RS-485 communication waiting time setting	449
N038	341	RS-485 communication CR/LF selection	449
N040	547	USB communication station number	493
N041	548	USB communication check time interval	493
N050	726	Auto Baudrate/Max Master	480
N051	727	Max Info Frames	480
N052	728	Device instance number (Upper 3 digits)	480
N053	729	Device instance number (Lower 4 digits)	480
N054	390	% setting reference frequency	480
N080	343	Communication error count	465
N500 to N543, N550 to N559	1300 to 1343, 1350 to 1359	Communication option parameters. For details, refer to the Instruction Manual of the option.	

◆ G: Control Parameter

Parameters for motor control.

Pr. group	Pr.	Name	Refer to page
G000	0	Torque boost Simple	496
G001	3	Base frequency Simple	497
G002	19	Base frequency voltage	497
G003	14	Load pattern selection	499
G010	46	Second torque boost	496
G011	47	Second V/F (base frequency)	497
G030	60	Energy saving control selection	500
G040	100	V/F1 (first frequency)	501
G041	101	V/F1 (first frequency voltage)	501
G042	102	V/F2 (second frequency)	501
G043	103	V/F2 (second frequency voltage)	501
G044	104	V/F3 (third frequency)	501
G045	105	V/F3 (third frequency voltage)	501
G046	106	V/F4 (fourth frequency)	501
G047	107	V/F4 (fourth frequency voltage)	501
G048	108	V/F5 (fifth frequency)	501
G049	109	V/F5 (fifth frequency voltage)	501
G060	673	SF-PR slip amount adjustment operation selection	502
G061	674	SF-PR slip amount adjustment gain	502
G100	10	DC injection brake operation frequency	502
G101	11	DC injection brake operation time	502
G105	522	Output stop frequency	505
G106	250	Stop selection	507
G107	70	Parameter for manufacturer setting. Do not set.	
G110	12	DC injection brake operation voltage	502
G120	882	Regeneration avoidance operation selection	514
G121	883	Regeneration avoidance operation level	514
G122	884	Regeneration avoidance at deceleration detection sensitivity	514
G123	885	Regeneration avoidance compensation frequency limit value	514
G124	886	Regeneration avoidance voltage gain	514
G125	665	Regeneration avoidance frequency gain	514
G130	660	Increased magnetic excitation deceleration operation selection	517
G131	661	Magnetic excitation increase rate	517
G132	662	Increased magnetic excitation current level	517
G200	800	Control method selection	143
G203	245	Rated slip	518
G204	246	Slip compensation time constant	518
G205	247	Constant-power range slip compensation selection	518
G211	820	Speed control P gain 1	154
G212	821	Speed control integral time 1	154
G213	824	Torque control P gain 1 (current loop proportional gain)	154
G214	825	Torque control integral time 1 (current loop integral time)	154
G216	827	Torque detection filter 1	158
G224	828	Parameter for manufacturer setting. Do not set.	
G311	830	Speed control P gain 2	154
G312	831	Speed control integral time 2	154
G313	834	Torque control P gain 2	154
G314	835	Torque control integral time 2	154
G316	837	Torque detection filter 2	158
G410	653	Speed smoothing control	519
G411	654	Speed smoothing cutoff frequency	519
G932	89	Speed control gain (Advanced magnetic flux vector)	147
G942	569	Second motor speed control gain	147

*1 The parameter number in parentheses is the one for use with the LCD operation panel and the parameter unit.
*2 Setting can be made only for the standard model.

5.2 Control method

V/F control (initial setting), Advanced magnetic flux vector control, and PM motor control are available with this inverter.

◆V/F control

- It controls the frequency and voltage so that the ratio of frequency (F) to voltage (V) is constant while changing the frequency.

◆Advanced magnetic flux vector control

- This control performs vector calculation and divide the inverter's output current into an excitation current and into a torque current. The frequency and the voltage are then compensated to flow the motor current that meets the load torque. This control methods improves the torque generation at a low speed. The output frequency is further compensated (slip compensation) to bring the actual motor speed closer to the commanded speed. This function is useful when the load fluctuates are severe.

POINT

- Advanced magnetic flux vector control requires the following conditions.
  If the conditions are not satisfied, select V/F control. Otherwise, malfunctions such as insufficient torque, uneven rotation may occur.
- For the motor capacity, the rated motor current should be equal to or less than the rated inverter current. (It must be 0.4 kW or higher.)
  Using a motor with the rated current substantially lower than the rated inverter current will cause torque ripples, etc. and degrade the speed and torque accuracies. As a reference, select the motor with the rated motor current that is about 40% or higher of the rated inverter current.
- The motor described in the table below is used.

Motor	Condition
Mitsubishi standard motor (SF-JR)	Offline auto tuning is not required
Mitsubishi high-efficiency motor (SF-HR)	
Mitsubishi constant-torque motor (SF-JRCA 4P, SF-HRCA)	
Mitsubishi high-performance energy-saving motor (SF-PR)	
Other motors (other manufacturers, SF-TH, etc.)	Offline auto tuning is required

- Single-motor operation (one motor to one inverter) is preformed.
- The wiring length from inverter to motor is 30 m or less. (When the wiring length exceeds 30 m, perform offline auto tuning in a wired state.)
- A sine wave filter (MT-BSL/BSC) is not used.

◆PM motor control

- Highly efficient motor control and highly accurate motor speed control can be performed by using the inverter with a PM (permanent magnet embedded) motor, which is more efficient than an induction motor.
- The motor speed is calculated based on the output voltage and current from the inverter. It does not require a speed detector such as an encoder. The inverter drives the PM motor with the least required current when a load is applied in order to achieve the highest motor efficiency.
- Performing the IPM parameter initialization makes the IPM motor MM-EFS or MM-THE4 ready for the PM motor control.

PM motor control image

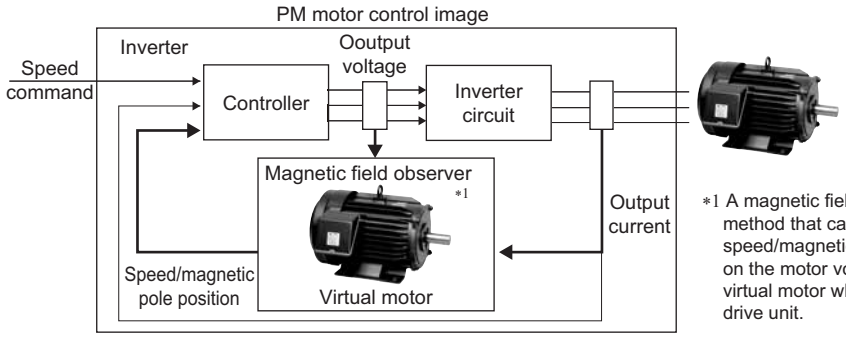

*1 A magnetic field observer is a control method that calculates the motor speed/magnetic pole position based on the motor voltage and current of a virtual motor which is set up in the drive unit.

POINT

- The PM motor control requires the following conditions.
- The motor used are described in the table below.

Motor	Condition
Mitsubishi IPM motor (MM-EFS, MM-THE4)	Offline auto tuning is not required
IPM motor (other than MM-EFS, MM-THE4), SPM motor	Offline auto tuning is required

- For the motor capacity, the rated motor current should be equal to or less than the rated inverter current. (It must be 0.4 kW or higher.)
  Using a motor with the rated current substantially lower than the rated inverter current will cause torque ripples, etc. and degrade the speed and torque accuracies. As a reference, select the motor with the rated motor current that is about 40% or higher of the rated inverter current.
- Single-motor operation (one motor to one inverter) is preformed.
- The overall wiring length with the motor is 100 m or less. (Refer to page 44.) (Even with the IPM motor MM-EFS/MM-THE4, when the wiring length exceeds 30 m, perform offline auto tuning.)
- A surge voltage suppression filter (FR-ASF/FR-BMF) or sine wave filter (MT-BSL/BSC) is not used.

5.2.1 Changing the control method

Set the control method.

V/F control, Advanced magnetic flux vector control, and PM motor control are the control methods available for selection.

When using an IPM motor MM-EFS or MM-THE4, simply performing the IPM parameter initialization enables the PM motor control.

- The PM motor test operation can be performed by setting **Pr.800 Control method selection**.

Pr.	Name	Initial value	Setting range	Description
71 **C100**	**Applied motor**	0*1	0 to 6, 13 to 16, 20, 23, 24, 40, 43, 44, 50, 53, 54, 70, 73, 74, 210, 213, 214, 8090, 8093, 8094, 9090, 9093, 9094	By selecting a standard motor or constant-torque motor, the thermal characteristic and motor constant of each motor are set.
80 **C101**	**Motor capacity**	9999	0.4 to 55 kW*1	Set the applied motor capacity.
			0 to 3600 kW*2	
			9999	V/F control
81 **C102**	**Number of motor poles**	9999	2, 4, 6, 8, 10, 12	Set the number of motor poles.
			9999	V/F control
83 **C104**	**Rated motor voltage**	200/400V*3	0 to 1000 V	Set the rated motor voltage (V).
84 **C105**	**Rated motor frequency**	9999	10 to 400Hz	Set the rated motor frequency (Hz).
			9999	The setting value of **Pr.3 Base frequency** is used. *4
800 **G200**	**Control method selection**	20	9	PM motor test operation (Motor is not driven even if it is connected.)
			20	Normal operation (Motor can be driven.)

*1 For theFR-F820-02330(55K) or lower, and theFR-F840-01160(55K)or lower.

*2 For theFR-F820-03160(75K) or higher and theFR-F840-01800(75K)or higher.

*3 The initial value differs according to the voltage class. (200V class/400V class)

*4 When the IPM motor MM-EFS or MM-THE4 is selected by **Pr.71 Applied motor**, the rated frequency of the MM-EFS or MM-THE4 is used. When a PM motor other than the MM-EFS or MM-THE4 is selected by **Pr.71**, 75 Hz (for the motor capacity 15 kW or lower) or 100 Hz (18.5 kW or higher) is used.

◆Setting the motor capacity and the number of motor poles (Pr.80, Pr.81)

- Motor specifications (the motor capacity and the number of motor poles) must be set to select Advanced magnetic flux vector control, or PM motor control.
- Set the motor capacity (kW) in **Pr.80 Motor capacity** and set the number of motor poles in **Pr.81 Number of motor poles**.

NOTE

- Setting the number of motor poles in **Pr.81** changes the **Pr.144 Speed setting switchover** setting automatically. (Refer to page 261.)

◆PM motor control test operation (Pr.800="9")

- Test operation in the speed control is available without connecting a motor.
  The speed calculation changes to track the speed command, and such speed changes can be checked on the operation panel or by outputting it as analog signals to the terminal FM, AM, or CA.

NOTE

- Since current is not detected and voltage is not output, monitors related to current and voltage such as output current and output voltage, etc. and output signals do not function.

◆I/O signal operation during the test operation

- During the test operation, the following signals are invalid.

1) **Input terminal function selection (Pr.178 to Pr.189)**
   - V/F switchover signal (X18)
   - Start-time tuning start external input signal (X28)

2) **Output terminal function selection (Pr.190 to Pr.196)**
   - Electronic thermal O/L relay pre-alarm signal (THP)
   - Start time tuning completion signal (Y39)

Parameters referred to

Pr.178 to Pr.189 (input terminal function selection) page 329
Pr.190 to Pr.196 (output terminal function selection) page 288

◆Valid/invalid status of monitor outputs during the test run

○ : Valid
× : Invalid (always displays 0)
Δ : Displays accumulated value before the test
— : Not monitored

Types of monitor	DU/PU Monitor display	FM/AM/CA Output
Output frequency	○	○
Fault display	○	—
Frequency setting value	○	○
Running speed	○	○
Converter output voltage	○	○
Electric thermal relay load factor	× *2	× *2
Output current peak value	× *2	× *2
Converter output voltage peak value	○	○
Load meter	○	○
Cumulative energization time	○	—
Reference voltage output	—	○
Actual operation time	○	—
Cumulative power	Δ	—
Trace status	○	×
Station number (RS-485 terminals)	○	—
Station number (PU connector)	○	—
Station number (CC-Link)	○	—
Energy saving effect	○	○
Cumulative energy saving	Δ	—
PID set point	○	○
PID measured value	○	○
PID deviation	○	○*3
Input terminal status	○	—
Output terminal status	○	—
Option input terminal status	○	—
Option output terminal status	○	—
Motor thermal load factor	○*4	○*4
Inverter thermal load factor	○*4	○*4
PTC thermistor value	○	—
PID measured value 2	○	○
Remote output 1	○	○
Remote output 2	○	○
Remote output 3	○	○
Remote output 4	○	○
PID manipulated amount	○	○*3
Second PID set point	○	○
Second PID measured value	○	○
Second PID deviation	○	○*3
Second PID measured value 2	○	○
Second PID manipulated amount	○	○*3

*1 Different output interface (operation panel, parameter unit, terminal FM/CA or terminal AM) can output different monitored items. For details, refer to page 273.
*2 When the operation is switched to the test run, "0" is displayed. When PM sensorless vector control is selected again after a test run, the output current peak value and the electronic thermal relay load factor from the last operation are displayed.
*3 The monitored status can be output via the terminal AM only.
*4 When the operation is switched to the test run, accumulated thermal value is reduced by considering the output current is "0".

Parameters referred to

Pr.52 Operation panel main monitor selection ☞ page 263
Pr.158 AM terminal function selection ☞ page 273

◆Changing the control method with external terminals (RT signal, X18 signal)

- Control method (V/F control, Advanced magnetic flux vector control) can be switched among using external terminals. The control method can be either switched using the Second function selection (RT) signal or the V/F switchover (X18) signal.
- When using the RT signal, set the second motor in **Pr.450 Second applied motor**. Turning ON the RT signal enables the second function, enabling the switchover of the control method.
- When using the X18 signal, turning ON the X18 signal switches the presently-selected control method (Advanced magnetic flux vector control) to the V/F control. At this time, the second functions including electronic thermal characteristic are not changed. Use this method to switch the control method for one motor. (To switch the second functions, use the RT signal.) To input the X18 signal, set "18" in any of **Pr.178 to Pr.189 (input terminal function selection)** to assign the function.

First motor control method	Second motor control method (RT signal-ON)	Pr.450 setting value	Pr.453, Pr.454 setting value
V/F control	V/F control	9999	—
		—	9999*2
	Advanced magnetic flux vector control	Induction motor	Other than 9999
	PM motor control	IPM/SPM motor	
Advanced magnetic flux vector control PM motor control *1	Same control as the first motor*1	9999	—
	V/F control	—	9999*2
	Advanced magnetic flux vector control	Induction motor	Other than 9999
	PM motor control	IPM/SPM motor	

*1 V/F control is set by turning ON the X18 signal. If the X18 signal is unassigned, RT signal performs the same function; Turning ON the RT signal selects V/F control.

*2 V/F control is set when **Pr.453** or **Pr.454** = "9999". When **Pr.450** is set to the IPM motor MM-EFS or MM-THE4, PM motor control is enabled even if **Pr.453** ≠ "9999" or **Pr.454** = "9999".

NOTE

- RT signal is assigned to the terminal RT in the initial status. Set "3" in one of **Pr.178 to Pr.189 (input terminal function selection)** to assign the RT signal to another terminal.
- The RT signal is a second function selection signal. The RT signal also enables other second functions. (Refer to page 333.)
- The control method could be changed by external terminals (RT signal, X18 signal) while the inverter is stopped. If a signal is switched during the operation, the control method changes after the inverter stops.

Parameters referred to

Pr.178 to Pr.189 (input terminal function selection) page 329

Pr.450 Second applied motor page 337

5.2.2 Selecting the Advanced magnetic flux vector control Magnetic flux

POINT

- To use the Advanced magnetic flux vector control, set the motor capacity, the number of motor poles, and the motor type using **Pr.80** and **Pr.81**.

◆Advanced magnetic flux vector control

Perform secure wiring. (Refer to page 33.)

↓

Make the motor setting. **(Pr.71)**

Motor		Pr.71 setting*1	Remarks
Mitsubishi standard motor Mitsubishi high-efficiency motor	SF-JR	0 (initial value) (3, 4)	
	SF-JR 4P 1.5 kW or lower	20	
	SF-HR	40	
	Others	0 (3)	Offline auto tuning is required.*2
Mitsubishi constant-torque motor	SF-JRCA 4P	1	
	SF-HRCA	50	
	Other (SF-JRC, etc.)	1 (13)	Offline auto tuning is required.*2
Mitsubishi high-performance energy-saving motor	SF-PR	70	
Other manufacturer's standard motor	—	0 (3)	Offline auto tuning is required.*2
Other manufacturer's constant-torque motor	—	1 (13)	Offline auto tuning is required.*2

*1 For the other setting values of **Pr.71**, refer to page 337.

*2 For offline auto tuning, refer to page 341.

↓

Set the motor overheat protection. **(Pr.9)** (Refer to page 225)

↓ Set the rated motor current (A) in **Pr.9 Electronic thermal O/L relay**.

Setting the motor capacity and the number of motor poles. **(Pr.80, Pr.81)** (Refer to page 143.)

↓ Set the motor capacity (kW) in **Pr.80 Motor capacity**, and set the number of motor poles in **Pr.81 Number of motor poles**. (V/F control is performed when the setting is "9999" (initial value).)

Set the rated motor voltage and frequency. **(Pr.83, Pr.84)** (Refer to page 341.)

↓ Set the rated motor voltage (V) in **Pr.83 Rated motor voltage**, and set the rated motor frequency (Hz) in **Pr.84 Rated motor frequency**.

Set the operation command. (Refer to page 200.)

↓ Select the start command and speed command.

Test run

As required

- Perform offline auto tuning. **(Pr.96)** (Refer to page 341.)
- Select the online auto tuning. **(Pr.95)** (Refer to page 359.)

NOTE

- Under this control, rotations are more likely to be uneven than under V/F control. (This control method is not suitable for grinder, wrapping machine, etc., which require even rotation at a low speed.)
- For FR-F820-02330(55K) or lower and FR-F840-01160(55K) or lower, the operation with a surge voltage suppression filter (FR-ASF-H/FR-BMF-H) installed between the inverter and the motor may reduce the output torque.
- The optional sine wave filter (MT-BSL/BSC) cannot be used between the inverter and the motor.
- Changing the terminal assignment using **Pr.178 to Pr.189 (input terminal function selection)** may affect the other functions. Set parameters after confirming the function of each terminal.

◆Keeping the motor speed constant when the load fluctuates (speed control gain)

Pr.	Name	Initial value	Setting range	Description
89 G932	**Speed control gain (Advanced magnetic flux vector)**	9999	0 to 200%	Makes adjustments to keep the motor speed constant during variable load operation under Advanced magnetic flux vector control. The reference value is 100%.
			9999	The gain set by **Pr.71.** (The gain set in accordance with the motor.)
569 G942	**Second motor speed control gain**	9999	0 to 200%	Makes adjustments to keep the second motor speed constant during variable load operation under Advanced magnetic flux vector control. The reference value is 100%.
			9999	The gain set by **Pr.450.** (The gain set in accordance with the motor.)

- Use **Pr.89** to keep the motor speed constant during variable load operation.
  (This parameter is useful to make adjustments on the motor speed.)

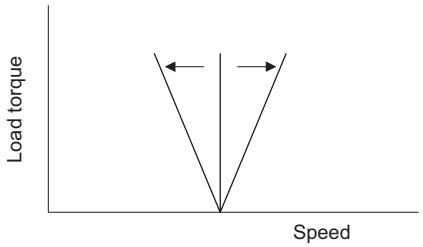

◆Driving two motors under Advanced magnetic flux vector control

- Turning ON the Second function selection (RT) signal enables the second motor operation.
- Set a second motor in **Pr.450 Second applied motor**. (In the initial setting, "9999 (no second motor)" is selected. Refer to page 337.)

Function	RT signal ON (second motor)	RT signal OFF (first motor)
Applied motor	**Pr.450**	**Pr.71**
Motor capacity	**Pr.453**	**Pr.80**
Number of motor poles	**Pr.454**	**Pr.81**
Speed control gain (Advanced magnetic flux vector)	**Pr.569**	**Pr.89**

NOTE

- The RT signal is a second function selection signal. The RT signal also enables other second functions. (Refer to page 333.) RT signal is assigned to the terminal RT in the initial status. Set "3" in any of **Pr.178 to Pr.189 (input terminal function selection)** to assign the RT signal to another terminal.
- Changing the terminal assignment using **Pr.178 to Pr.189 (input terminal function selection)** may affect the other functions. Set parameters after confirming the function of each terminal.

Parameters referred to

Pr.71, Pr.450 Applied motor page 337
Pr.800 Control method selection page 143

5.2.3 Selecting the PM motor control PM

◆Selecting the PM motor control by performing parameter initialization on the operation panel (I PM)

POINT

- The parameters required to drive an IPM motor MM-EFS or MM-THE4 are automatically changed as a batch. (Refer to page 151.)
- [PM] on the operation panel (FR-DU08) is on when the PM motor control is set.

Operation example **Initialize the parameter settings for an IPM motor MM-EFS or MM-THE4 by selecting IPM parameter initialization on the operation panel.**

Operation

1.	Screen at power-ON The monitor display appears.
2.	Changing the operation mode Press PU EXT to choose the PU operation mode. [PU] indicator is on.
3.	Parameter setting mode Press MODE to choose the parameter setting mode. [PRM] indicator is on.
4.	IPM parameter initialization Turn the dial until I PM (IPM parameter initialization) appears.
5.	Setting value display Press SET to read the present set value. "0" (initial value) appears.
6.	Changing the setting value Turn the dial to change the set value to "12", then press SET. "12" and "I PM" flicker alternately. The setting is completed.

Setting	Description
0	Parameter settings for an induction motor
12	Parameter settings for an IPM motor MM-EFS/MM-THE4 (rotations per minute)

NOTE

- If parameters are initialized for a PM motor in the IPM initialization mode, the **Pr.998 PM parameter initialization** setting is automatically changed.
- To set a speed or to display monitored items in frequency, **Pr.998**. (Refer to page 150.)

◆Initializing the parameters required for the PM motor control (Pr.998)

- PM parameter initialization sets parameters required for driving an IPM motor MM-EFS or MM-THE4.
- The offline auto tuning enables the operation with an IPM motor other than MM-EFS/MM-THE4 and with SPM motors.
- Two MM-EFS/MM-THE4 IPM parameter initialization methods are available; setting **Pr.998 PM parameter initialization**, and selecting PM (IPM parameter initialization) mode on the operation panel.

Pr.	Name	Initial value	Setting range	Description	
998 **E430**	**PM parameter initialization**	0	0	Parameter settings for an induction motor (frequency)	The parameter settings required to drive an induction motor are set.
			12	For IPM motor MM-EFS/MM-THE4. Parameter setting (rotations per minute)	The parameters settings required to drive an IPM motor are set.
			112	For IPM motor MM-EFS/MM-THE4. Parameter setting (frequency)	
			8009	The parameters settings required to drive an IPM motor other than MM-EFS/MM-THE4 are set. (rotations per minute)(after tunning)	The parameters settings required to drive an IPM motor are set. (Set **Pr.71 Applied motor** and perform offline auto tuning in advance. (Refer to page 351.))
			8109	The parameters settings required to drive an IPM motor other than MM-EFS/MM-THE4 are set. (frequency)(after tunning)	
			9009	The parameters settings required to drive an SPM motor are set. (rotations per minute)(after tunning)	The parameters settings required to drive an SPM motor are set. (Set **Pr.71 Applied motor** and perform offline auto tuning in advance. (Refer to page 351.))
			9109	The parameters settings required to drive an SPM motor are set. (frequency)(after tunning)	

- To use a motor capacity that is one rank lower than the inverter capacity, set **Pr.80 Motor capacity** before performing IPM parameter initialization.
- When **Pr.998**="12, 8009, or 9009", the monitor is displayed and the frequency is set using the motor rotations per minute. To use frequency to display or set, set **Pr. 998**="112, 8109, or 9109".
- Set **Pr.998**="0" to change the PM motor control parameter settings to the parameter settings required to drive an induction motor.
- When using an IPM motor other than MM-EFS/MM-THE4, set **Pr.998** = "8009, 8109, 9009, or 9109". The setting can be made after performing offline auto tuning.

NOTE

- Make sure to set **Pr.998** before setting other parameters. If the **Pr.998** setting is changed after setting other parameters, some of those parameters will be initialized too. (Refer to "(3) PM parameter initialization list" for the parameters that are initialized.)
- To change back to the parameter settings required to drive an induction motor, perform parameter clear or all parameter clear
- If the setting of **Pr.998 PM parameter initialization** is changed between "12, 8009, 9009 (rotations per minute)" ⇔ "112, 8109, 9109 (frequency)", the target parameters are respectively set to their initial values. The purpose of **Pr.998** is not to change the display units. Use **Pr.144 Speed setting switchover** to change the display units between rotations per minute and frequency. **Pr.144** enables switching of display units between rotations per minute and frequency without initializing the parameter settings.
  Example) Changing the **Pr.144** setting between "6" and "106" switches the display units between frequency and rotations per minute.
- For an inverter out of the capacity range of the IPM motor MM-EFS/MM-THE4, "12 or 112" cannot be set. (Refer to page 583 for the capacities of MM-EFS/MM-THE4 motors.)

◆PM parameter initialization list

- The parameter settings in the following table are changed to the settings required to perform PM motor control by selecting PM motor control with the IPM parameter initialization mode on the operation panel or with **Pr.998 PM parameter initialization**.
- Performing parameter clear or all parameter clear sets back the parameter settings to the settings required to drive an induction motor.

Pr.	Name	Pr.998	Setting						Setting increments	
			Induction motor		PM motor (rotations per minute)		PM motor (frequency)			
			0 (initial value)		12 (MM-EFS, MM-THE4)	8009 9009 (other than MM-EFS, MM-THE4)	112 (MM-EFS, MM-THE4)	8109 9109 (other than MM-EFS, MM-THE4)	12, 8009, 9009	0, 112, 8109, 9109
			FM	CA						
1	Maximum frequency		120 Hz*1 60 Hz*2		Maximum motor rotations per minute	Maximum motor frequency*6	Maximum motor frequency	Maximum motor frequency*6	1 r/min	0.01 Hz
4	Multi-speed setting (high speed)		60 Hz	50 Hz	Rated motor rotations per minute	**Pr.84**	Rated motor frequency	**Pr.84**	1 r/min	0.01 Hz
9	Electronic thermal O/L relay		Rated inverter current		Rated motor current (Refer to page 583.)	—	Rated motor current (Refer to page 583.)	—	0.01 A*1 0.1 A*2	
13	Starting frequency		0.5 Hz		Minimum rotations per minute	**Pr.84** ×10%	Minimum frequency	**Pr.84** ×10%	1 r/min	0.01 Hz
15	Jog frequency		5 Hz		Minimum rotations per minute	**Pr.84** ×10%	Minimum frequency	**Pr.84** ×10%	1 r/min	0.01 Hz
18	High speed maximum frequency		120 Hz*1 60 Hz*2		Maximum motor rotations per minute	—	Maximum motor frequency	—	1 r/min	0.01 Hz
20	Acceleration/deceleration reference frequency		60 Hz	50 Hz	Rated motor rotations per minute	**Pr.84**	Rated motor frequency	**Pr.84**	1 r/min	0.01 Hz
22	Stall prevention operation level		120% *5	110% *5	Short-time motor torque				0.1%	
37	Speed display		0		0				1	
55	Frequency monitoring reference		60 Hz	50 Hz	Rated motor rotations per minute	**Pr.84**	Rated motor frequency	**Pr.84**	1 r/min	0.01 Hz
56	Current monitoring reference		Rated inverter current		Rated motor current (Refer to page 583.)	**Pr.859**	Rated motor current (Refer to page 583.)	**Pr.859**	0.01 A*1 0.1 A*2	
71	Applied motor		0		210*3	—	210*3	—	1	
80	Motor capacity		9999		Inverter capacity*4	—	Inverter capacity*4	—	0.01 kW*1 0.1 kW*2	
81	Number of motor poles		9999		Number of motor poles*4	—	Number of motor poles*4	—	1	
84	Rated motor frequency		9999		Rated motor rotations per minute*4	—	Rated motor frequency*4	—	1 r/min	0.01 Hz
125 (903)	Terminal 2 frequency setting gain frequency		60 Hz	50 Hz	Rated motor rotations per minute	**Pr.84**	Rated motor frequency	**Pr.84**	1 r/min	0.01 Hz
126 (905)	Terminal 4 frequency setting gain frequency		60 Hz	50 Hz	Rated motor rotations per minute	**Pr.84**	Rated motor frequency	**Pr.84**	1 r/min	0.01 Hz
144	Speed setting switchover		4		Number of motor poles + 100	**Pr.81** +100	Number of motor poles	**Pr.81**	1	
240	Soft-PWM operation selection		1		0				1	
263	Subtraction starting frequency		60 Hz	50 Hz	Rated motor rotations per minute	**Pr.84**	Rated motor frequency	**Pr.84**	1 r/min	0.01 Hz

Pr.	Name	Pr.998	Setting						Setting increments	
			Induction motor		PM motor (rotations per minute)		PM motor (frequency)			
			0 (initial value)		12 (MM-EFS, MM-THE4)	8009 9009 (other than MM-EFS, MM-THE4)	112 (MM-EFS, MM-THE4)	8109 9109 (other than MM-EFS, MM-THE4)	12, 8009, 9009	0, 112, 8109, 9109
			FM	CA						
266	Power failure deceleration time switchover frequency		60 Hz	50 Hz	Rated motor rotations per minute	**Pr.84**	Rated motor frequency	**Pr.84**	1 r/min	0.01 Hz
374	Overspeed detection level		9999		Overspeed detection level, rotations per minute	Maximum motor frequency +10 Hz*6	Overspeed detection level, frequency	Maximum motor frequency +10 Hz*6	1 r/min	0.01 Hz
390	% setting reference frequency		60 Hz	50 Hz	Rated motor rotations per minute	**Pr.84**	Rated motor frequency	**Pr.84**	1 r/min	0.01 Hz
505	Speed setting reference		60 Hz	50 Hz	Rated motor frequency	**Pr.84**	Rated motor frequency	**Pr.84**	0.01 Hz	
557	Current average value monitor signal output reference current		Rated inverter current		Rated motor current (Refer to page 583.)	**Pr.859**	Rated motor current (Refer to page 583.)	**Pr.859**	0.01 A*1	
									0.1 A*2	
870	Speed detection hysteresis		0 Hz		Speed detection hysteresis rotations per minute	0.5 Hz	Speed detection hysteresis frequency	0.5 Hz	1 r/min	0.01 Hz
885	Regeneration avoidance compensation frequency limit value		6 Hz		Minimum rotations per minute	**Pr.84** ×10%	Minimum frequency	**Pr.84** ×10%	1 r/min	0.01 Hz
893	Energy saving monitor reference (motor capacity)		Rated inverter capacity		Motor capacity **(Pr.80)**				0.01 kW*1	
									0.1 kW*2	
C14 (918)	Terminal 1 gain frequency (speed)		60 Hz	50 Hz	Rated motor rotations per minute	**Pr.84**	Rated motor frequency	**Pr.84**	1 r/min	0.01 Hz

—: Not changed

*1 Initial value for the FR-F820-02330(55K) or lower and FR-F840-01160(55K) or lower.

*2 Initial value for the FR-F820-03160(75K) or higher and FR-F840-01800(75K) and higher.

*3 Setting **Pr.71 Applied motor** ="213, 214, 8093, 8094, 9093, or 9094" does not change the **Pr.71** setting.

*4 When a value other than "9999" is set, the set value is not changed.

*5 110% for SLD, 120% for LD (Refer to **Pr.570 Multiple rating setting** page 168.)

*6 The **Pr.702 Maximum motor frequency** is used as the maximum motor frequency. When **Pr.702** ="9999 (initial value)", the **Pr.84 Rated motor frequency** is used as the maximum motor frequency.

NOTE

- If PM parameter initialization is performed in rotations per minute (**Pr.998** = "12, 8009, or 9009"), the parameters not listed in the table and the monitored items are also set and displayed in rotations per minute.

◆IPM motor specification list

	MM-EFS（15 kW or lower）	MM-EFS（18.5 kW to 55 kW）	MM-THE4（75 kW to 160 kW）
Rated motor frequency (rotations per minute)	75 Hz (1500 r/min)	100 Hz (1500 r/min)	75 Hz (1500 r/min)
Maximum motor frequency (rotations per minute)	112.5 Hz (2250 r/min)	150 Hz (2250 r/min)	90 Hz (1800 r/min)
Number of motor poles	6	8	6
Short-time motor torque	110% for SLD, 120% for LD		
Minimum frequency (rotations per minute)	7.5 Hz (150 r/min)	10 Hz (150 r/min)	7.5 Hz (150 r/min)
Speed detection hysteresis frequency (rotations per minute)	0.5 Hz (10 r/min)	0.5 Hz (8 r/min)	0.5 Hz (10 r/min)
Overspeed detection level, frequency (rotations per minute)	122.5 Hz (2450 r/min)	160 Hz (2400 r/min)	100 Hz (2000 r/min)

5.3 Speed control under PM motor control

Purpose	Parameter to set			Refer to page
To adjust the gain during PM motor control	Speed control gain adjustment	P.G211 to P.G214, P.G311 to P.G314	Pr.820, Pr.821, Pr.824, Pr.825, Pr.830, Pr.831, Pr.834, Pr.835	154
To stabilize torque feedback signal	Torque detection filter	P.G216, P.G316	Pr.827, Pr.837	158

Speed control performs control so that the speed command and the actual motor rotation speed match.

5.3.1 Setting procedure of PM motor control PM

This inverter is set for a general-purpose motor in the initial setting. Follow the following procedure to change the setting for the PM motor control.

Driving an MM-EFS or MM-THE4 IPM motor

Perform IPM parameter initialization. (Refer to page 149.)

Set "12 or 112" in **Pr.998 PM parameter initialization**, or select "12" in "IPM" (IPM initialization mode).
Setting value "12": parameter settings for MM-EFS/MM-THE4 IPM motor (rotations per minute)
Setting value "112": parameter settings for MM-EFS/MM-THE4 IPM motor (frequencies)

Driving a PM motor other than MM-EFS/MM-THE4

Set the motor. **(Pr.9, Pr.71, Pr.80, Pr.81, Pr.83, Pr.84)** (Refer to page 337, 351.)

Set "8093 (IPM motor other than MM-EFS/MM-THE4)" or "9093 (SPM motor)" in **Pr.71 Applied motor**. Set **Pr.9 Rated motor current**, **Pr.80 Motor capacity**, **Pr.81 Number of motor poles**, **Pr.83 Rated motor voltage**, and **Pr.84 Rated motor frequency** according to the motor specifications.
(Setting "9999 (initial value)" in **Pr.80 or Pr.81** selects V/F control.)

Perform offline auto tuning for a PM motor. **(Pr.96)** (Refer to page 351.)

Set "1" (offline auto tuning without rotating motor (for other than MM-EFS/MM-THE4)) in **Pr.96**,

Configure the initial setting for the PM motor control using **Pr.998**. (Refer to page 150.)

When the setting for the PM motor is selected in **Pr.998 PM parameter initialization**, the PM motor control is selected.
[PM] on the operation panel (FR-DU08) is lit when the PM motor control is set.
"8009": Parameter (rotations per minute) settings for an IPM motor other than MM-EFS/MM-THE4
"8109": Parameter (frequency) settings for an IPM motor other than MM-EFS/MM-THE4
"9009": Parameter (rotations per minute) settings for an SPM motor
"9109": Parameter (frequency) settings for an SPM motor

Set parameters such as the acceleration/deceleration time and multi-speed setting.

Set parameters such as the acceleration/deceleration time and multi-speed setting as required.

Set the operation command. (Refer to page 200.)

Select the start command and speed command.

Test run

As required for MM-EFS/MM-THE4

- Perform offline auto tuning for a PM motor. (Refer to page 351.)

NOTE

- To change to the PM motor control, perform PM parameter initialization at first. If parameter initialization is performed after setting other parameters, some of those parameters will be initialized too. (Refer to page 151 for the parameters that are initialized.)
- Constant-speed operation cannot be performed in the low-speed range of 150 r/min or less.
- During PM motor control, the RUN signal is output about 100 ms after turning ON the start command (STF, STR). The delay is due to the magnetic pole detection.
- During PM motor control, the automatic restart after instantaneous power failure function operates only when an MM-EFS or MM-THE4 IPM motor is connected.
  When a regeneration unit is used, the frequency search may not be available if the rotation speed is about 10% higher than the rating.

5.3.2 Performing high-accuracy, fast-response control (gain adjustment for PM motor control) PM

Manual gain adjustment is useful for achieving optimum machine performance or improving unfavorable conditions, such as vibration and acoustic noise during operation with high load inertia or gear backlash.

Pr.	Name	Initial value	Setting range	Description
820 G211	**Speed control P gain 1**	25%	0 to 1000%	The proportional gain during speed control is set. (Setting this parameter higher improves the trackability for speed command changes. It also reduces the speed fluctuation caused by external disturbance.)
821 G212	**Speed control integral time 1**	0.333 s	0 to 20 s	The integral time during speed control is set. (Setting this parameter lower shortens the return time to the original speed when the speed fluctuates due to external disturbance.)
824 G213	**Torque control P gain 1 (current loop proportional gain)**	50%	0 to 500%	The proportional gain of the current controller is set.
825 G214	**Torque control integral time 1 (current loop integral time)**	40 ms	0 to 500 ms	The integral time of the current controller is set.
830 G311	**Speed control P gain 2**	9999	0 to 1000%	Second function of **Pr.820** (valid when RT signal is ON)
			9999	The **Pr.820** setting is applied to the operation.
831 G312	**Speed control integral time 2**	9999	0 to 20 s	Second function of **Pr.821** (valid when RT signal is ON)
			9999	The **Pr.821** setting is applied to the operation.
834 G313	**Torque control P gain 2**	9999	0 to 500%	Second function of **Pr.824** (valid when RT signal is ON)
			9999	The **Pr.824** setting is applied to the operation.
835 G314	**Torque control integral time 2**	9999	0 to 500 ms	Second function of **Pr.825** (valid when RT signal is ON)
			9999	The **Pr.825** setting is applied to the operation.

◆Adjusting the speed control gain manually

- The speed control gain can be adjusted for the conditions such as abnormal machine vibration, acoustic noise, slow response, and overshoot.
- **Pr.820 Speed control P gain 1**="25% (initial value)" is equivalent to 50 rad/s (speed response of a single motor). (Equivalent to the half the rad/s value with the FR-F820-03160(75K) or higher and FR-F840-01800(75K) or higher.) Setting this parameter higher speeds up the response, but setting this too high causes vibration and acoustic noise.
- Setting **Pr.821 Speed control integral time 1** lower shortens the return time to the original speed during speed fluctuation, but setting it too low causes overshoot.

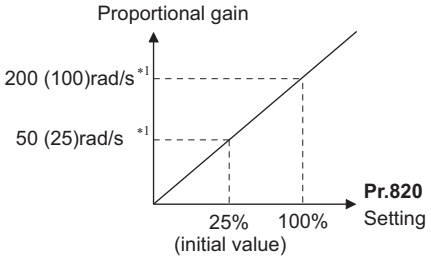

*1 The value in parentheses is applicable with the FR-F820-03160(75K) or higher and FR-F840-01800(75K) or higher.

- Actual speed gain is calculated as below when load inertia is applied.

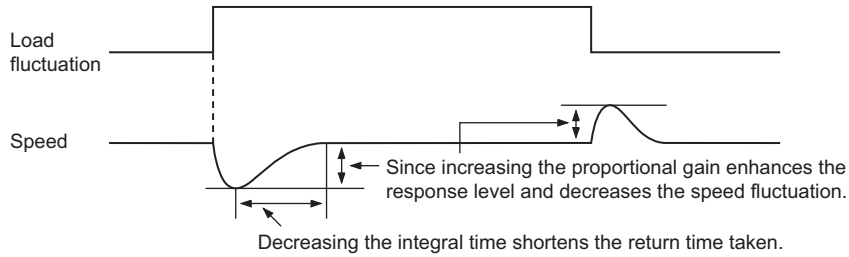

$$\text{Actual speed gain} = \text{Speed gain of a single motor} \times \frac{JM}{JM + JL}$$

JM: Motor inertia
JL: Load inertia converted as the motor axis inertia

- Adjust in the following procedure:
  1) Change the **Pr.820** setting while checking the conditions.
  2) If it cannot be adjusted well, change **Pr.821** setting, and perform 1) again.

No.	Movement / condition	Adjustment method	
1	Load inertia is high.	Set **Pr.820** and **Pr.821** higher.	
		Pr.820	If acceleration is slow, raise the setting by 10%s and then set the value to 0.8 to 0.9 × the setting immediately before vibration/noise starts occurring.
		Pr.821	If overshoots occur, raise the setting by double the setting and then set the value to 0.8 to 0.9 × the setting where overshoots stop occurring.
2	Vibration or acoustic noise are generated from machines.	Set **Pr.820** lower and **Pr.821** higher.	
		Pr.820	Lower the setting by 10%s and then set the value to 0.8 to 0.9 × the setting immediately before vibration/noise starts occurring.
		Pr.821	If overshoots occur, raise the setting by double the setting and then set the value to 0.8 to 0.9 × the setting where overshoots stop occurring.
3	Response is slow.	Set **Pr.820** higher.	
		Pr.820	If acceleration is slow, raise the setting by 5%s and then set the value to 0.8 to 0.9 × the setting immediately before vibration/noise starts occurring.
4	Return time (response time) is long.	Set **Pr.821** lower.	
		Lower **Pr.821** by half the current setting and then set the value to 0.8 to 0.9 × the setting immediately before overshoots or unstable movements stop occurring.	
5	Overshoots or unstable movements occur.	Set **Pr.821** higher.	
		Raise **Pr.821** by double the current setting and then set the value to 0.8 to 0.9 × the setting immediately before overshoots or unstable movements stop occurring.	

NOTE

- **Pr.830 Speed control P gain 2** and **Pr.831 Speed control integral time 2** are valid when terminal RT is ON. In this case, replace them for **Pr.820** and **Pr.821** in the description above.

◆Gain adjustment of current controllers for the d axis and the q axis

- Use **Pr.824 Torque control P gain 1 (current loop proportional gain)** to adjust the proportional gain of current controllers for the d axis and the q axis. The 100% gain is equivalent to 1000 rad/s. Setting this parameter higher improves the trackability for current command changes. It also reduces the current fluctuation caused by external disturbance.
- Use **Pr.825 Torque control integral time 1 (current loop integral time)** to set the integral time of current controllers for the d axis and the q axis. If the setting value is small, it produces current fluctuation toward disturbance, decreasing time until it returns to original current value.

NOTE

- **Pr.834 Torque control P gain 2** and **Pr.835 Torque control integral time 2** are valid when terminal RT is ON. In this case, replace them for **Pr.824** and **Pr.825** in the description above.

5.3.3 Troubleshooting in the speed control PM

No.	Condition	Cause	Countermeasure
1	Motor does not run at the correct speed. (Command speed and actual speed differ.)	Speed command from the controller is different from the actual speed. The speed command is affected by noise.	• Check that the speed command sent from the controller is correct. (Take EMC measures.) • Set **Pr.72 PWM frequency selection** lower.
		The command speed and the speed recognized by the inverter are different.	• Adjust the bias and gain **(Pr.125, Pr.126, C2 to C7, C12 to C15)** of the speed command again.
2	The speed does not accelerate to the command speed.	Torque shortage. The stall prevention operation level is operating.	• Raise the stall prevention operation level. (Refer to page 248.) • Increase the capacity.
		Only P (proportional) control is performed.	• Speed deviation occurs under P (proportional) control when the load is heavy. Select PI control.
3	Motor speed fluctuates.	Speed command varies.	• Check that the speed command sent from the controller is correct. (Take EMC measures.) • Set **Pr.72** lower. • Set **Pr.822 Speed setting filter 1** higher. (page 313)
		Torque shortage.	• Raise the stall prevention operation level. (Refer to page 248.)
		Speed control gain is not suitable for the machine. (Resonance occurs.)	• Adjust **Pr.820 Speed control P gain 1** and **Pr.821 Speed control integral time 1**.
4	Hunting (vibration or acoustic noise) occurs in the motor or the machine.	Speed control gain is too high.	• Set **Pr.820** lower and **Pr.821** higher.
		Torque control gain is too high.	• Set **Pr.824 Torque control P gain 1 (current loop proportional gain)** lower.
		Motor wiring is incorrect.	• Check the wiring.
5	Acceleration/ deceleration time is different from the setting.	Torque shortage.	• Raise the stall prevention operation level. (Refer to page 248.)
		Load inertia is too high.	• Set acceleration/deceleration time suitable for the load.
6	Machine movement is unstable.	Speed control gain is not suitable for the machine.	• Adjust **Pr.820** and **Pr.821**.
		Response is slow because of the inverter's acceleration/deceleration time setting.	• Set the optimum acceleration/deceleration time.
7	Rotation ripple occurs during the low-speed operation.	High carrier frequency is affecting the motor rotation.	• Set **Pr.72** lower.
		Speed control gain is too low.	• Set **Pr.820** higher.

Parameters referred to

Pr.3 Base frequency, Pr.19 Base frequency voltage page 497
Pr.72 PWM frequency selection page 179
Pr.80 Motor capacity, Pr.81 Number of motor poles page 143
Pr.125 Terminal 2 frequency setting gain frequency, Pr.126 Terminal 4 frequency setting gain frequency page 314
Pr.822 Speed setting filter 1 page 313

5.3.4 Torque detection filter PM

Set the time constant of primary delay filter for torque feedback signal.
Speed loop response is reduced. Under ordinary circumstances, therefore, use the initial value as it is.

Pr.	Name	Initial value	Setting range	Description
827 G216	**Torque detection filter 1**	0 s	0	Without filter
			0.001 to 0.1 s	Set the time constant of primary delay filter torque feedback signal.
837 G316	**Torque detection filter 2**	9999	0 to 0.1 s	Second function of **Pr.827** (enabled when RT signal ON)
			9999	Same as **Pr.827** setting

◆Stabilizing torque detection (Pr.827, Pr.837)

- Current loop response is reduced. Under ordinary circumstances, therefore, use the initial value as it is.
  If there is torque ripple due to high frequency disturbance, adjust until speed stabilizes by gradually raising the setting.
  Speed is oppositely destabilized if the setting value is too large.

◆Employing multiple primary delay filters

- Use **Pr.833, Pr.837** if changing filter according to application. **Pr.833, Pr.837**: Second function selection (RT) signal

NOTE

- The RT signal is a second function selection signal. The RT signal also enables other second functions. (Refer to page 333.)
- The RT signal is assigned to the terminal RT in the initial setting. Set "3" in any of **Pr.178 to Pr.189 (input terminal function selection)** to assign the RT signal to another terminal.

5.4 (E) Environment setting parameters

Purpose	Parameter to set			Refer to page
To set the time	Simple clock function	P.E020 to P.E022	Pr.1006 to Pr.1008	160
To set a limit for the reset function To shut off output if the operation panel disconnects To force deceleration to a stop on the operation panel	Reset selection/ disconnected PU detection/PU stop selection/Reset limit	P.E100 to P.E102, P.E107	Pr.75	162
To select the display language of the parameter unit	PU display language selection	P.E103	Pr.145	164
To control the buzzer of the parameter unit and operation panel	PU buzzer control	P.E104	Pr.990	164
To adjust the LCD contrast of the parameter unit	PU contrast adjustment	P.E105	Pr.991	165
To turn OFF the operation panel when not using it for a certain period of time	Display-off mode	P.E106	Pr.1048	165
To use the USB memory	USB host reset	P.E110	Pr.1049	165
To use the setting dial of the operation panel like a potentiometer to set the frequency. To disable the operation panel.	Operation panel operation selection	P.E200	Pr.161	166
To change the frequency change increments which changes when using the setting dial of the operation panel	Frequency change increment amount setting	P.E201	Pr.295	167
To use the regeneration unit to increase the motor braking torque	Regenerative brake selection	P.E300	Pr.30	508
To change the overload current rating specification	Multiple rating setting	P.E301	Pr.570	168
To input a voltage between 480 V and 500 V	Input voltage mode selection	P.E302	Pr.977	168
To prevent parameter rewriting	Parameter write disable selection	P.E400	Pr.77	169
To restrict parameters with a password	Password function	P.E410, P.E411	Pr.296, Pr.297	171
To use parameters freely	Free parameter	P.E420, P.E421	Pr.888, Pr.889	173
To change parameter settings for an IPM motor as a batch	PM parameter initialization	P.E430	Pr.998	150
To set multiple parameters as a batch	Automatic parameter setting	P.E431	Pr.999	173
To display the required parameters	Applicable parameter display and user group function	P.E440 to P.E443	Pr.160, Pr.172 to Pr.174	177
To release the parameter copy warning (CP)	Parameter copy alarm release	P.E490	Pr.989	521
To reduce the motor noise and EMI	PWM carrier frequency changing	P.E600 to P.E602	Pr.72, Pr.240, Pr.260	179
To understand the maintenance time of inverter parts and peripheral device	Inverter parts life display	P.E700 to P.E704	Pr.255 to Pr.259	180
	Maintenance output function	P.E710 to P.E715	Pr.503, Pr.504, Pr.686 to Pr.689	184
	Current average value monitor signal	P.E720 to P.E722	Pr.555 to Pr.557	185

5.4.1 Real time clock function

The time can be set. The time can only be updated while the inverter power is ON.
The real time clock function is enabled using an optional LCD operation panel (FR-LU08).

Pr.	Name	Initial value	Setting range	Description
1006 E020	**Clock (year)**	2000	2000 to 2099	Set the year.
1007 E021	**Clock (month, day)**	101 (January 1)	101 to 131, 201 to 228, (229), 301 to 331, 401 to 430, 501 to 531, 601 to 630, 701 to 731, 801 to 831, 901 to 930, 1001 to 1031, 1101 to 1130, 1201 to 1231	Set the month and day. 1000 and 100 digits: January to December 10 and 1 digits: 1 to end of month (28, 29, 30 or 31) For December 31, set "1231".
1008 E022	**Clock (hour, minute)**	0 (00:00)	0 to 59, 100 to 159, 200 to 259, 300 to 359, 400 to 459, 500 to 559, 600 to 659, 700 to 759, 800 to 859, 900 to 959, 1000 to 1059, 1100 to 1159, 1200 to 1259,1300 to 1359, 1400 to 1459, 1500 to 1559, 1600 to 1659, 1700 to 1759, 1800 to 1859,1900 to 1959, 2000 to 2059, 2100 to 2159, 2200 to 2259, 2300 to 2359	Set the hour and minute using the 24-hour clock. 1000 and 100 digits: 0 to 23 hours 10 and 1 digits: 0 to 59 minutes For 23:59, set "2359".

◆Simple clock function

- When the year, month, day, time and minute are set in the parameters, the inverter counts the date and time. The date and time can be checked by reading the parameters.

NOTE

- The clock's count-up data is saved in the inverter's EEPROM every 10 minutes.
- Because the date and time are cleared after turning OFF the control circuit power supply, the clock function must be reset after turning ON the power supply. Use a separate power supply, such as an external 24 V power supply, for the control circuit of the simple clock function, and supply power continuously to this control circuit.
- In the initial setting, inverter reset is performed if supplying power to the main circuit is started when power is supplied only to the control circuit. Then, the clock information stored in EEPROM is restored. Reset at the start of supplying power to the main circuit can be disabled by setting **Pr.30 Regenerative function selection**. (Refer to page 508)
- The set clock is also used for functions such as faults history.

◆Real time clock function

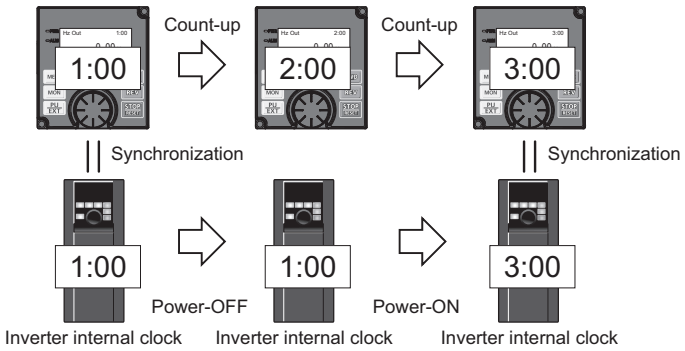

- When the FR-LU08 is connected to the inverter, the internal clock of the inverter can be synchronized with the clock of FR-LU08. (Real time clock function)
  With a battery (CR1216), the FR-LU08 time count continues even if the main power of the inverter is turned OFF. (The time count of the inverter internal clock does not continue when the inverter power is turned OFF.
- To adjust the clock of FR-LU08, use the FR-LU08 and set **Pr.1006** to **Pr.1008**.

NOTE

- Time adjustment between the inverter internal clock and the FR-LU08 is performed every one minute.
- When the FR-LU08 clock is initialized after the battery is exhausted for example, the inverter internal clock is valid.

5.4.2 Reset selection/disconnected PU detection/PU stop selection

The reset input acceptance, disconnected PU (operation panel/paprameter unit) connector detection function and PU stop function (PU stop) can be selected.

Pr.	Name	Initial value	Setting range	Description
75	**Reset selection/disconnected PU detection/PU stop selection**	14	0 to 3, 14 to 17*1	For the initial setting, reset is always enabled, without disconnected PU detection, and with the PU stop function.
			0 to 3, 14 to 17, 100 to 103, 114 to 117*2	
E100	**Reset selection**	0	0	Reset input is always enabled.
			1	Reset input is enabled only when the protective function is activated.
E101	**Disconnected PU detection**	0	0	Operation continues even when the PU is disconnected.
			1	The inverter output is shut off when the PU is disconnected.
E102	**PU stop selection**	1	0	Decelerates to a stop when the STOP key is pressed in PU operation mode only.
			1	Decelerates to a stop when the STOP key for PU is pressed in any of the PU, external and communication operation modes.
E107	Reset limit	0	0	Reset limit disabled
			1 *2	Reset limit enabled

The parameters above will not return to their initial values even if parameter (all) clear is executed.

*1 The setting range for the FR-F820-02330(55K) or lower and FR-F840-01160(55K) or lower.

*2 The setting range for the FR-F820-03160(75K) or higher and FR-F840-01800(75K) or higher.

Pr.75 Setting*3	Reset selection	Disconnected PU detection	PU stop selection
0, 100	Reset input always enabled	Operation continues even when PU is disconnected.	Decelerates to a stop when STOP RESET is input in PU operation mode only.
1, 101	Reset input enabled only when protective function activated		
2, 102	Reset input always enabled	Inverter output shut off when PU disconnected.	
3, 103	Reset input enabled only when protective function activated		
14 (Initial value), 114	Reset input always enabled	Operation continues even when PU is disconnected.	Decelerates to a stop when STOP RESET is input in any of the PU, external and communication operation modes.
15, 115	Reset input enabled only when protective function activated		
16, 116	Reset input always enabled	Inverter output shut off when PU disconnected.	
17, 117	Reset input enabled only when protective function activated		

*3 Setting **Pr.75** = any of "100 to 103 and 114 to 117" will enable the reset limit function. The setting is available for the FR-F820-03160(75K) or higher and FR-F840-01800(75K) or higher.

◆Reset selection (P.E100)

- When **P.E100**="1" or **Pr.75**="1, 3, 15, 17, 100, 103, 115, or 117" is set, reset (reset command via RES signal or communication) input is enabled only when the protective function is activated.

NOTE

- When the reset signal (RES) is input during operation, the motor coasts since the inverter being reset shuts off the output. Also, the cumulative values of electronic thermal O/L relay and regenerative brake duty are cleared.
- The input of the PU reset key is only enabled when the protective function is activated, regardless of the **P.E100 and Pr.75** settings.

◆Disconnected PU detection (P.E101)

- If the PU (FR-DU08/FR-PU07) is detected to be disconnected from the inverter for 1 s or longer while **P.E101** ="1" or **Pr.75** = "2, 3, 16, 17, 102, 103, 116, or 117", PU disconnection (E.PUE) is displayed and the inverter output is shut off.

NOTE

- When the PU has been disconnected since before power-ON, the output is not shut off.
- To restart, confirm that the PU is connected and then reset.
- When **P.E101**="0" or **Pr.75** ="0, 1, 14, 15, 100, 101, 114, or 115" (operation continues even when PU disconnected), decelerates to a stop when PU is disconnected during PU JOG operation.
- When RS-485 communication operation is performed through the PU connector, the reset selection/PU stop selection function is valid but the disconnected PU detection function is invalid. (The communication is checked according to **Pr.122 PU communication check time interval**.)

◆PU stop selection (P.E102)

- Stop can be performed by inputting STOP RESET from the PU in any of the operation modes of PU operation, External operation and network operation.
- When stop is performed by the PU stop function, "PS" is displayed on the PU. A fault output is not provided.
- When **P.E102**="0" or **Pr.75**="0 to 3, 100 to 103" is set, deceleration stop using STOP RESET is valid only in the PU operation mode.

NOTE

- When **Pr.551 PU mode operation command source selection**="1" (PU mode RS-485 terminal), deceleration stop is performed even when STOP RESET is input during operation in PU mode via RS-485 communication.

◆How to restart after stopping with STOP RESET input from the PU during External operation (PU stop (PS) release method)

- PU stop release method for operation panel (FR-DU08)

  1)After completion of deceleration to a stop, switch OFF the STF and STR signal.

  2)Press PU EXT three times. (PS release)

  (When **Pr.79 Operation mode selection** = "0 (initial value) or 6")

  When **Pr.79** = "2, 3, or 7", PU stop can be released by pressing one time.

- PU stop release method for parameter unit (FR-PU07)

  1)After completion of deceleration to a stop, switch OFF the STF or STR signal.

  2)Press EXT. (PS release)

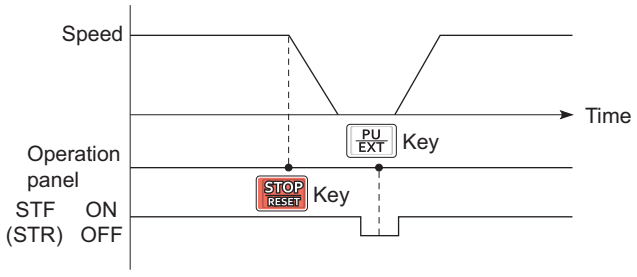

Stop/restart example for External operation

- The motor can be restarted by resetting the power supply or resetting with a RES signal.

NOTE

- Even when **Pr.250 Stop selection** ≠ "9999" is set and coasting stop is selected, deceleration stop and not coasting stop is performed in the PU stop function during External operation.

◆Reset limit function (P.E107)

- When **P.E107** = "1" or **Pr.75** = any of "100 to 103 and 114 to 117", if an electronic thermal O/L relay or an overcurrent protective function (E.THM, E.THT, E.OC[]) is activated while one of them has been already activated within 3 minutes, the inverter will not accept any reset command (RES signal, etc.) for about 3 minutes from the second activation.
- The reset limit function is available with the FR-F820-03160(75K) or higher and FR-F840-01800(75K) or higher.

NOTE

- Resetting the inverter power (turning OFF the control power) will clear the accumulated thermal value.
- When the retry function is set enabled (**Pr.67 Number of retries at fault occurrence** ≠ "0"), the reset limit function is disabled.

⚠ Caution

- **Do not perform a reset while a start signal is being input. Doing so will cause a sudden start of the motor, which is dangerous.**

Parameters referred to

Pr.67 Number of retries at fault occurrence page 236
Pr.79 Operation mode selection page 200
Pr.250 Stop selection page 507
Pr.551 PU mode operation command source selection page 210

5.4.3 PU display language selection

The display language of the parameter unit (FR-PU07) can be selected.

Pr.	Name	Initial value	Setting range	Description
145 E103	PU display language selection	1	0	Japanese
			1	English
			2	German
			3	French
			4	Spanish
			5	Italian
			6	Swedish
			7	Finnish

5.4.4 Buzzer control

The buzzer can be set to "beep" when the keys of the operation panel and the parameter unit are operated.

Pr.	Name	Initial value	Setting range	Description
990 E104	PU buzzer control	1	0	Without buzzer
			1	With buzzer

NOTE

- When with buzzer is set, the buzzer sounds if an inverter fault occurs.

5.4.5 PU contrast adjustment

Contrast adjustment of the LCD of the LCD operation panel (FR-LU08) and the parameter unit (FR-PU07) can be performed.
Decreasing the setting value lowers the contrast.

Pr.	Name	Initial value	Setting range	Description
991 **E105**	**PU contrast adjustment**	58	0 to 63	0: Low → 63: High

The above parameter is displayed as a simple mode parameter only when the LCD operation panel (FR-LU08) and the parameter unit (FR-PU07) are connected.

5.4.6 Display-off mode

The LED of the operation panel (FR-DU08) can be turned OFF when it has not been used for a certain period of time.

Pr.	Name	Initial value	Setting range	Description
1048 **E106**	**Display-off waiting time**	0	0	Display-off mode disabled
			1 to 60 min	Set time until the LED of the operation panel is turned OFF.

- If the operation panel has not been operated for the time set in **Pr.1048**, the display-off mode is enabled and its LED is turned OFF.
- In the display-off mode, the "MON" LED flickers slowly.
- The count to display off is reset at installation/removal of the operation panel, power-ON/OFF of the inverter, or inverter reset.
- Display-off mode end condition
  - Operation of the operation panel
  - Occurrence of a warning, alarm, or fault
  - Installation/removal of the operation panel, power-ON/OFF of the inverter, or inverter reset
  - Connection/disconnection of the USB A connector

NOTE

- The "P.RUN" LED is on in the display-off mode (when the PLC function is operating).

5.4.7 Resetting USB host errors

When a USB device is connected to the USB connector (connector A), the USB host error can be canceled without performing an inverter reset.

Pr.	Name	Initial value	Setting range	Description
1049 **E110**	**USB host reset**	0	0	Read only
			1	Resets the USB host.

- Parameter copy (refer to page 521) and the trace function (refer to page 433) can be used when a USB device (such as a USB memory) is connected to the USB connector (connector A).
- When a device such as a USB charger is connected to the USB connector and an excessive current (500 mA or higher) flows, USB host error UF (UF warning) is displayed on the operation panel.
- If a UF warning occurs, disconnect the USB device and set **Pr.1049**="1" to cancel the USB error. (The UF warning can also be canceled by resetting the inverter power or resetting with the RES signal.)

5.4.8 Setting dial potentiometer mode/key lock operation selection

The setting dial of the operation panel (FR-DU08) can be used for setting like a potentiometer.
The key operation of the operation panel can be disabled.

Pr.	Name	Initial value	Setting range	Description	
161 E200	Frequency setting/key lock operation selection	0	0	Setting dial frequency setting mode	Key lock mode disabled
			1	Setting dial potentiometer mode	
			10	Setting dial frequency setting mode	Key lock mode enabled
			11	Setting dial potentiometer mode	

◆Using the setting dial like a potentiometer to set the frequency

- The frequency can be set by simply turning the setting dial of the operation panel (FR-DU08) during operation.

  SET needs not to be pressed. (For the details of the operation method, refer to page 98.)

NOTE

- If the display changes from flickering "60.00" to "0.00", the setting value of **Pr.161** may not be "1".
- The newly-set frequency will be saved as the set frequency in EEPROM after 10 s.
- When setting the frequency by turning the setting dial, the frequency goes up to the set value of **Pr.1 Maximum frequency** (initial value: 200 Hz). Be aware of what frequency **Pr.1** is set to, and adjust the setting of **Pr.1** according to the application.

◆Disabling the setting dial and key operation of the operation panel (Press and hold [MODE] (2 s))

- Operation using the setting dial and keys of the operation panel (FR-DU08) can be disabled to prevent parameter changes, unexpected starts or frequency changes.
- Set **Pr.161** to "10 or 11" and then press MODE for 2 s to disable setting dial or key operations.
- When setting dial and key operations are disabled, HOLd appears on the operation panel. If setting dial or key operation is attempted while dial and key operations are disabled, HOLd appears. (When a setting dial or key operation is not performed for 2 s, the monitor display appears.)
- To enable the setting dial and key operation again, press MODE for 2 s.

NOTE

- Even if setting dial and key operations are disabled, the monitor indicator and STOP RESET are enabled.
- The PU stop cannot be released with key operations unless the operation lock is released first.

Parameters referred to

Pr.1 Maximum frequency page 245

5.4.9 Frequency change increment amount setting

When setting the set frequency with the setting dial of the operation panel (FR-DU08), the frequency changes in 0.01 Hz increments in the initial status. Setting this parameter to increase the frequency increment amount that changes when the setting dial is rotated can improve usability.

Pr.	Name	Initial value	Setting range	Description
295 E201	Frequency change increment amount setting	0	0	Function invalid
			0.01	The minimum change width when the set frequency is changed with the setting dial can be set.
			0.10	
			1.00	
			10.00	

◆Basic operation

- When **Pr.295**≠"0", the minimum increment when the set frequency is changed with the setting dial can be set.
  For example, when **Pr.295**="1.00 Hz", one click (one dial gauge) of the setting dial changes the frequency in increments of 1.00 Hz, such as 1.00 Hz → 2.00 Hz → 3.00 Hz.

When **Pr.295**="1"

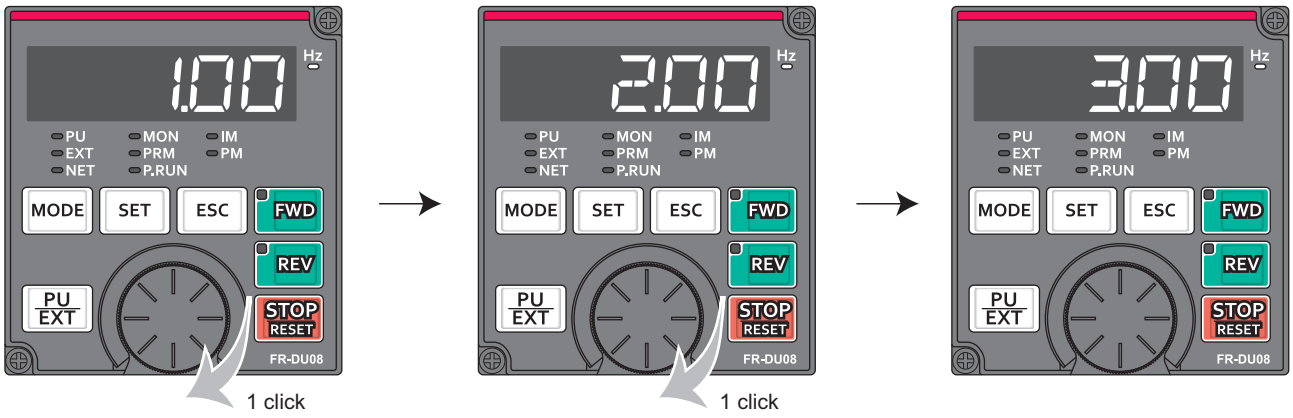

NOTE

- When machine speed display is selected in **Pr.37 Speed display**, the minimum increments of change are determined by **Pr.295** as well. Note that the setting value may differ because the speed setting performs frequency conversion for the set machine speed, and then reverse-converts it to the speed display again.
- For **Pr.295**, the increments are not displayed.
- The **Pr.295** setting is enabled only for changes to the set frequency. It does not apply to the settings of other parameters related to frequency.
- When 10 is set, the frequency setting changes in 10 Hz increments. Be cautious of excessive speed (in potentiometer mode).

Parameters referred to

Pr.37 Speed display page 261

5.4.10 Multiple rating setting

Four rating types of different rated current and permissible load can be selected. The optimal inverter rating can be chosen in accordance with the application, enabling equipment size to be reduced.

Pr.	Name	Initial value		Setting range	Description (overload current rating, surrounding air temperature)
		FM	CA		
570 E301	Multiple rating setting	1	0	0	SLD rating 110% 60 s, 120% 3 s (inverse-time characteristics) Surrounding air temperature 40°C
				1	LD rating 120% 60 s, 150% 3 s (inverse-time characteristics) Surrounding air temperature 50°C

◆Changing the parameter initial values and setting ranges

- When inverter reset and all parameter clear are performed after setting **Pr.570**, the parameter initial values are changed according to each rating, as shown below.

Pr.	Name	Pr.570 setting		Refer to
		0	1	
9	Electronic thermal O/L relay	SLD rated current*1	LD rated current*1	225
22	Stall prevention operation level	110%	120%	248
48	Second stall prevention operation level	110%	120%	248
56	Current monitoring reference	SLD rated current*1	LD rated current*1	273
148	Stall prevention level at 0 V input	110%	120%	248
149	Stall prevention level at 10 V input	120%	150%	248
150	Output current detection level	110%	120%	296
165	Stall prevention operation level for restart	110%	120%	414
557	Current average value monitor signal output reference current	SLD rated current*1	LD rated current*1	185
874	OLT level setting	110%	120%	248
893	Energy saving monitor reference (motor capacity)	SLD rated motor capacity*1	LD rated motor capacity*1	283

*1 The rated current and motor capacity differ depending on the inverter capacity. Refer to the inverter rated specifications (page 578).

NOTE

- When **Pr.570**="0" (SLD rating), carrier frequency automatic reduction is enabled regardless of the setting in **Pr.260 PWM frequency automatic switchover**.

Parameters referred to

Pr.260 PWM frequency automatic switchover page 179

5.4.11 Using the power supply exceeding 480 V

To input a voltage between 480 V and 500 V to the 400 V class inverter, change the voltage protection level.

Pr.	Name	Initial value	Setting range	Description
977 E302	Input voltage mode selection	0	0	400 V class voltage protection level
			1	500 V class voltage protection level

- To use a voltage between 480 V and 500 V, set **Pr.977 Input voltage mode selection** = "1". The setting is applied after a reset.
- Setting **Pr.977** = "1" will change the voltage protection level to the one for the 500 V class.
- The increased magnetic excitation deceleration level is changed to 740 V. (Use **Pr.660 Increased magnetic excitation deceleration operation selection** to select the increased magnetic excitation deceleration.)

NOTE

- Stand-alone options (except line noise filter) cannot be used when inputting a voltage between 480 and 500 V.
- The voltage protection level of the 200 V class inverters is not affected by the **Pr.977** setting.

Parameters referred to

Pr.660 Increased magnetic excitation deceleration operation selection page 517

5.4.12 Parameter write selection

Whether to enable the writing to various parameters or not can be selected. Use this function to prevent parameter values from being rewritten by misoperation.

Pr.	Name	Initial value	Setting range	Description
77 E400	Parameter write selection	0	0	Writing is enabled only during stop.
			1	Parameter writing is disabled.
			2	Parameter writing is enabled in any operation mode regardless of the operation status.

- **Pr.77** can be set at any time regardless of the operation mode or operation status. (Setting through communication is unavailable.)

◆Writing parameters only during stop (Pr.77 = "0" initial value)

- Parameters can be written only during a stop in the PU operation mode.
- The following parameters can always be written regardless of the operation mode or operation status.

Pr.	Name
4 to 6	(Multi-speed setting high-speed, middle-speed, low-speed)
22	Stall prevention operation level
24 to 27	(Multi-speed setting speed 4 to speed 7)
52	Operation panel main monitor selection
54	FM/CA terminal function selection
55	Frequency monitoring reference
56	Current monitoring reference
72*1	PWM frequency selection
75	Reset selection/disconnected PU detection/PU stop selection
77	Parameter write selection
79*2	Operation mode selection
129	PID proportional band
130	PID integral time
133	PID action set point
134	PID differential time
158	AM terminal function selection
160	User group read selection
232 to 239	(Multi-speed setting speed 8 to speed 15)
240*1	Soft-PWM operation selection
241	Analog input display unit switchover
268	Monitor decimal digits selection
290	Monitor negative output selection
295	Frequency change increment amount setting
296, 297	(Password setting)
306	Analog output signal selection
310	Analog meter voltage output selection
340*2	Communication startup mode selection
345, 346	(DeviceNet communication)
416, 417	(PLC function)
434, 435	(CC-Link communication)
496, 497	(Remote output)
498	PLC function flash memory clear

Pr.	Name
550*2	NET mode operation command source selection
551*2	PU mode operation command source selection
555 to 557	(Current average value monitor)
656 to 659	(Analog remote output)
663	Control circuit temperature signal output level
755 to 758	(Second PID control)
759	PID unit selection
774 to 776	(PU/DU monitor selection)
866	Torque monitoring reference
888, 889	(Free parameter)
891 to 899	(Energy saving monitor)
C0 (900)	FM/CA terminal calibration
C1 (901)	AM terminal calibration
C8 (930)	Current output bias signal
C9 (930)	Current output bias current
C10 (931)	Current output gain signal
C11 (931)	Current output gain current
990	PU buzzer control
991	PU contrast adjustment
992	Operation panel setting dial push monitor selection
997	Fault initiation
998*2	PM parameter initialization
999*2	Automatic parameter setting
1006	Clock (year)
1007	Clock (month, day)
1008	Clock (hour, minute)
1019	Analog meter voltage negative output selection
1048	Display-off waiting time
1142	Second PID unit selection
1150 to 1199	(PLC function user parameters)
1211 to 1219	(PID gain tunig)
1460 to 1466	(PID multistage set points 1 to 7)
1480 to 1485	(Load characteristics fault detection)

*1 Writing during operation is enabled in PU operation mode, but disabled in External operation mode.
*2 Writing during operation is disabled. To change the parameter setting value, stop the operation.

◆Disabling parameter write (Pr.77="1")

- Parameter write, parameter clear and all parameter clear are disabled. (Parameter read is enabled.)
- The following parameters can be written even if **Pr.77**="1".

Pr.	Name
22	Stall prevention operation level
75	Reset selection/disconnected PU detection/ PU stop selection
77	Parameter write selection
79	Operation mode selection*1
160	User group read selection
296	Password lock level

Pr.	Name
297	Password lock/unlock
345, 346	(DeviceNet communication)
496, 497	(Remote output)
656 to 659	(Analog remote output)
805	Torque command value (RAM)
997	Fault initiation

*1 Writing during operation is disabled. To change the parameter setting value, stop the operation.

◆Writing parameters during operation (Pr.77="2")

- These parameters can always be written.
- The following parameters cannot be written during operation if **Pr.77**="2". To change the parameter setting value, stop the operation.

Pr.	Name
23	Stall prevention operation level compensation factor at double speed
48	Second stall prevention operation level
49	Second stall prevention operation frequency
60	Energy saving control selection
66	Stall prevention operation reduction starting frequency
71	Applied motor
79	Operation mode selection
80	Motor capacity
81	Number of motor poles
82	Motor excitation current
83	Rated motor voltage
84	Rated motor frequency
90 to 94	(Motor constant)
95	Online auto tuning selection
96	Auto tuning setting/status
135 to 139	(Electronic bypass sequence parameter)
178 to 196	(Input and output terminal function selection)
248	Self power management selection
254	Main circuit power OFF waiting time
261	Power failure stop selection
289	Inverter output terminal filter
291	Pulse train I/O selection
298	Frequency search gain
313 to 322	(Extended output terminal function selection)
329	Digital input unit selection
414	PLC function operation selection
415	Inverter operation lock mode setting
418	Extension output terminal filter
450	Second applied motor
453	Second motor capacity
454	Number of second motor poles

Pr.	Name
455	Second motor excitation current
456	Rated second motor voltage
457	Rated second motor frequency
458 to 462	(Second motor constant)
463	Second motor auto tuning setting/status
541	Frequency command sign selection
560	Second frequency search gain
561	PTC thermistor protection level
570	Multiple rating setting
574	Second motor online auto tuning
578	Auxiliary motor operation selection
579	Motor connection function selection
598	Undervoltage level
606	Power failure stop external signal input selection
660 to 662	(Increased magnetic excitation deceleration)
673	SF-PR slip amount adjustment operation selection
699	Input terminal filter
702	Maximum motor frequency
706, 707, 711, 712, 717, 721, 724, 725	(PM motor tuning)
738 to 746	(Second PM motor tuning)
800	Control method selection
858	Terminal 4 function assignment
859	Torque current/Rated PM motor current
860	Second motor torque current/Rated PM motor current
868	Terminal 1 function assignment
977	Input voltage mode selection
998	PM parameter initialization
999	Automatic parameter setting
1002	Lq tuning target current adjustment coefficient

5.4.13 Password function

Registering a 4-digit password can restrict parameter reading/writing.

Pr.	Name	Initial value	Setting range	Description
296 **E410**	**Password lock level**	9999	0 to 6, 99, 100 to 106, 199	Select restriction level of parameter reading/ writing when a password is registered.
			9999	No password lock
297 **E411**	**Password lock/unlock**	9999	1000 to 9998	Register a 4-digit password
			(0 to 5) *1	Displays password unlock error count. (Reading only) (Valid when **Pr.296** = "100 to 106, or 199")
			9999 *1	No password lock

The above parameters can be set when **Pr.160 User group read selection** = "0". However, when **Pr.296** ≠ 9999 (password lock is set), **Pr.297** can always be set, regardless of the setting in **Pr.160**.

*1 When **Pr.297** = "0, 9999", writing is always enabled, but setting is disabled. (The display cannot be changed.)

◆Parameter reading/writing restriction level (Pr.296)

- The level of the reading/writing restriction using the PU/Network (NET) operation mode operation command can be selected with **Pr.296**.

Pr.296 setting	PU operation mode operation command*3		NET operation mode operation command*4			
			RS-485 terminals / PLC function*7		Communication option	
	Read*1	Write*2	Read	Write*2	Read	Write*2
9999	○	○	○	○	○	○
0, 100*6	×	×	×	×	×	×
1, 101	○	×	○	×	○	×
2, 102	○	×	○	○	○	○
3, 103	○	○	○	×	○	×
4, 104	×	×	×	×	○	×
5, 105	×	×	○	○	○	○
6, 106	○	○	×	×	○	×
99 to 199	Only the parameters registered in the user group can be read/written.*5 (For the parameters not registered in the user group, same restriction level as "4, 104" applies.)					

○: Enabled, ×: Disabled

*1 If the parameter reading is restricted by the **Pr.160 User group read selection** setting, those parameters are unavailable for reading even when "○" is indicated.

*2 If the parameter writing is restricted by the **Pr.77 Parameter write selection** setting, those parameters are unavailable for writing even when "○" is indicated.

*3 This restricts parameter access from the command source that can write a parameter under the PU operation mode (initially the operation panel (FR-DU08) or the parameter unit). (For the PU operation mode command source selection, refer to page 210.)

*4 This restricts parameter access from the command source that can write a parameter under the Network operation mode (initially the RS-485 terminals or a communication option). (For the NET operation mode command source selection, refer to page 210.)

*5 Read/write is enabled only for the simple mode parameters registered in the user group when **Pr.160**="9999". **Pr.296 and Pr.297** are always read/write enabled whether registered to a user group or not.

*6 If a communication option is installed, an option fault Option fault (E.OPT) occurs, and the inverter output shuts off. (**Refer to** page 546.)

*7 The PLC function user parameters (**Pr.1150 to Pr.1199**) can be written and read by the PLC function regardless of the **Pr.296** setting.

◆Registering a password (Pr.296, Pr.297)

- The following section describes how to register a password.

1)Set the parameter reading/writing restriction level. (**Pr.296** ≠ "9999")

Pr.296 setting	Password unlock error restriction	Pr.297 display
0 to 6, 99	No restriction	Always displays 0
100 to 106, 199*1	Restricted at fifth error	Displays the error count (0 to 5)

*1 During **Pr.296** = any of "100 to 106, 199", if password unlock error has occurred 5 times, correct password will not unlock the restriction. All parameter clear can unlock the restriction. (In this case, the parameters are returned to their initial values.)

2)Write a four-digit number (1000 to 9998) in **Pr.297** as a password. (Writing is disabled when **Pr.296**="9999".) When a password is registered, parameter reading/writing is restricted with the restriction level set in **Pr.296** until unlocking.

NOTE

- After registering a password, the read value of **Pr.297** is always one of "0 to 5".
- LOCd appears when a password restricted parameter is read/written.
- Even if a password is registered, the parameters, which the inverter itself writes, such as inverter parts life are overwritten as needed.
- Even if a password is registered, reading/writing is enabled for **Pr.991 PU contrast adjustment** when the parameter unit (FR-PU07) is connected.

◆Unlocking a password (Pr.296, Pr.297)

- There are two ways of unlocking the password.
- Enter the password in **Pr.297**. If the password matches, it unlocks. If the password does not match, an error occurs and the password does not unlock. When any of "100 to 106, or 199" is set in **Pr.296** and a password unlock error occurs five times, the restriction will not be unlocked even if the correct password is subsequently input. (Password lock in operation.)
- Perform all parameter clear.

NOTE

- If the password is forgotten, it can be unlocked with all parameter clear, but doing so will also clear the other parameters.
- All parameter clear cannot be performed during the operation.
- During the conditions where parameter reading is disabled (**Pr.296** = any of "0, 4, 5, 99, 100, 104, 105, or 199"), do not use FR Configurator2. It may not operate correctly.
- The password unlocking method differs between the operation panel, parameter unit, RS-485 communication and communication option.

	Operation panel/ parameter unit	RS-485 communication	Communication option
All parameter clear	○	○	○
Parameter clear	×	×	○

○: Password can be unlocked, ×: Password cannot be unlocked

- For the parameter clear and parameter all clear methods for the communication option and parameter unit, refer to the Instruction Manual of each option. (For the operation panel (FR-DU08), refer to page 520, for the Mitsubishi inverter protocol of RS-485 communication, refer to page 451, and for the Modbus-RTU communication protocol, refer to page 465.)

◆Parameter operations during password locking/unlocking

Operation		Password unlocked		Password locked	Password lock in operation
		Pr.296 = 9999 Pr.297 = 9999	Pr.296 ≠ 9999 Pr.297 = 9999	Pr.296 ≠ 9999 Pr.297 = 0 to 4 (read value)	Pr.296 = 100 to 106, 199 Pr.297 = 5 (read value)
Pr.296	Read	○*1	○	○	○
	Write	○*1	○*1	×	×
Pr.297	Read	○*1	○	○	○
	Write	×	○	○	○*3
Parameter clear execution		○	○	×*4	×*4
All parameter clear execution		○	○	○*2	○*2
Parameter copy execution		○	○	×	×

○: Enabled, ×: Disabled

*1 Reading/writing is disabled if reading is restricted by the **Pr.160** setting. (Reading is available in the Network operation mode regardless of the **Pr.160** setting.)

*2 All parameter clear cannot be performed during the operation.

*3 Correct password will not unlock the restriction.

*4 Parameter clear can only be performed from the communication option.

NOTE

- When **Pr.296** = "4, 5, 104, or 105" (password lock), the setting screen for PU JOG frequency is not displayed in the parameter unit (FR-PU07).
- When the password is being locked, parameter copy using the operation panel, parameter unit and USB memory is not enabled.

Parameters referred to

Pr.77 Parameter write selection page 169
Pr.160 User group read selection page 177
Pr.550 NET mode operation command source selection page 210
Pr.551 PU mode operation command source selection page 210

5.4.14 Free parameter

Any number within the setting range of 0 to 9999 can be input.
For example, these numbers can be used:

- As a unit number when multiple units are used.
- As a pattern number for each operation application when multiple units are used.
- As the year and month of introduction or inspection.

Pr.	Name	Initial value	Setting range	Description
888 **E420**	**Free parameter 1**	9999	0 to 9999	Any value can be input. The settings are retained even if the inverter power is turned OFF.
889 **E421**	**Free parameter 2**	9999	0 to 9999	

NOTE

- **Pr.888 and Pr.889** do not influence the operation of the inverter.

5.4.15 Setting multiple parameters as a batch

Parameter settings are changed as a batch. Those include communication parameter settings for the Mitsubishi's human machine interface (GOT) connection and the parameter setting for the rated frequency settings of 50 Hz/60 Hz and acceleration/deceleration time.
Multiple parameters are changed automatically. Users do not have to consider each parameter number. (Automatic parameter setting mode)

Pr.	Name	Initial value	Setting range	Description	
999 **E431**	**Automatic parameter setting**	9999*1	1	Standard PID display setting	
			2	Extended PID display setting	
			10	GOT initial setting (PU connector)	"Controller Type" in GOT: FREQROL 500/700/800, SENSORLESS SERVO
			11	GOT initial setting (RS485 terminals)	
			12	GOT initial setting (PU connector)	"Controller Type" in GOT: FREQROL 800 (Automatic Negotiation)
			13	GOT initial setting (RS-485 terminal)	
			20	50 Hz rated frequency	
			21	60 Hz rated frequency	
			9999	No action	

*1 The read value is always "9999".

◆Automatic parameter setting (Pr.999)

- Select which parameters to automatically set from the table below, and set them in **Pr.999**. Multiple parameter settings are changed automatically. Refer to page 175 for the list of parameters that are changed automatically.

Pr.999 Setting	Description		Operation in the automatic parameter setting mode
1	Sets the standard monitor indicator setting of PID control.		AUTO (AUTO) → PID (PID) → Write "1"
2	Automatically sets the monitor indicator for PID control.		AUTO (AUTO) → PID (PID) → Write "2"
10	Automatically sets the communication parameters for the GOT connection with a PU connector ("Controller Type" in GOT: FREQROL 500/700/800, SENSORLESS SERVO)		AUTO (AUTO) → GOT (GOT) → Write "1"
11	Automatically sets the communication parameters for the GOT connection with RS-485 terminals ("Controller Type" in GOT: FREQROL 500/700/800, SENSORLESS SERVO)		—
12	Automatically sets the communication parameters for the GOT connection with a PU connector ("Controller Type" in GOT: FREQROL 800 (Automatic Negotiation))		AUTO (AUTO) → GOT (GOT) → Write "2"
13	Automatically sets the communication parameters for the GOT connection with RS-485 terminals ("Controller Type" in GOT: FREQROL 800 (Automatic Negotiation))		—
20	50 Hz rated frequency	Sets the related parameters of the rated frequency according to the power supply frequency	AUTO (AUTO) → F50 (F50) → Write "1"
21	60 Hz rated frequency		—

NOTE

- If the automatic setting is performed with **Pr.999** or the automatic parameter setting mode, the settings including the changed parameter settings (changed from the initial setting) will be automatically changed. Before performing the automatic setting, confirm that changing the parameters will not cause any problem.

◆PID monitor indicator setting (Pr.999 = "1 or 2")

Pr.	Name	Initial value	Pr.999="1"	Pr.999="2"	Refer to page
759	**PID unit selection**	9999	9999	4	399
1142	**Second PID unit selection**	9999	9999	4	
774	**Operation panel monitor selection 1**	9999	9999	52	263
775	**Operation panel monitor selection 2**	9999	9999	53	
776	**Operation panel monitor selection 3**	9999	9999	54	
C42 (934)	**PID display bias coefficient**	9999	9999	0	399
C44 (935)	**PID display gain coefficient**	9999	9999	100	
1136	**Second PID display bias coefficient**	9999	9999	0	
1138	**Second PID display gain coefficient**	9999	9999	100	
—	**3-step monitor setting**	—	Disabled	Enabled*1	—
—	**Extended direct setting**	—	Disabled	Enabled*1	—
—	**Dedicated parameter list function**	—	Disabled	Enabled*1	—

*1 Enabled when the FR-PU07-01 is used.

- 3-line monitor setting
  The 3-line monitor is used as the first monitor.
- Extended direct setting
  Pressing the [FUNC] key of the FR-PU07-01 displays the extended direct setting screen. The PID action set point can be directly set regardless of the operation mode or **Pr.77 Parameter write selection** setting.
  Pressing the [FUNC] key on the extended direct setting screen displays the function menu.

Extended direct setting	Parameter to be set
Extended direct setting 1	**Pr.133 PID action set point**
Extended direct setting 2	**Pr.755 Second PID action set point**

- Dedicated parameter list function
  Pressing the [PrSET] key of the FR-PU07-01 displays the dedicated parameter list. Parameters that need to be set first for the PID extended display setting are listed.

Dedicated parameter list	Parameter to be set
No.1	**Pr.999 Automatic parameter setting**
No.2	**Pr.934 PID display bias coefficient**
No.3	**Pr.935 PID display gain coefficient**

NOTE

- The display of parameters other than the above may be changed due to changes in **C42** or **C44**. Set the PID monitor indicator before changing the settings of other parameters.

◆GOT initial setting (PU connector) (Pr.999 = "10, 12")

Pr.	Name	Initial value	Pr.999="10"	Pr.999="12"	Refer to page
79	**Operation mode selection**	0	1	1	200
118	**PU communication speed**	192	192	1152	449
119	**PU communication stop bit length**	1	10	0	
120	**PU communication parity check**	2	1	1	
121	**Number of PU communication retries**	1	9999	9999	
122	**PU communication check time interval**	9999	9999	9999	
123	**PU communication waiting time setting**	9999	0 ms	0 ms	
124	**PU communication CR/LF selection**	1	1	1	
340	**Communication startup mode selection**	0	0	0	209
414	**PLC function operation selection**	0	—	2*1	431

*1 When **Pr.414**="1", the setting value is not changed.

- Initial setting with the GOT2000 series
  - When "FREQROL 500/700/800, SENSORLESS SERVO" is selected for "Controller Type" in the GOT setting, set **Pr.999**="10" to configure the GOT initial setting.
  - When "FREQROL 800 (Automatic Negotiation)" is selected for "Controller Type" in the GOT setting, the GOT automatic connection can be used. When "FREQROL 800 (Automatic Negotiation)" is selected for "Controller Type" in the GOT setting and the GOT automatic connection is not used, set **Pr.999**="12" to configure the GOT initial setting. (Refer to page 494)
- Initial setting with the GOT1000 series
  - Set **Pr.999**="10" to configure the GOT initial setting.

NOTE

- Always perform an inverter reset after the initial setting.
- For the details of connection with GOT, refer to the Instruction Manual of GOT.

◆GOT initial setting (RS-485 terminals) (Pr.999 = "11, 13")

Pr.	Name	Initial value	Pr.999="11"	Pr.999="13"	Refer to page
79	Operation mode selection	0	0	0	200
332	RS-485 communication speed	96	192	1152	449
333	RS-485 communication stop bit length	1	10	0	
334	RS-485 communication parity check selection	2	1	1	
335	RS-485 communication retry count	1	9999	9999	
336	RS-485 communication check time interval	0 s	9999	9999	
337	RS-485 communication waiting time setting	9999	0 ms	0 ms	
340	Communication startup mode selection	0	1	1	209
341	RS-485 communication CR/LF selection	1	1	1	449
414	PLC function operation selection	0	—	2*1	431
549	Protocol selection	0	0	0	465

*1 When **Pr.414**="1", the setting value is not changed.

- Initial setting with the GOT2000 series
  - When "FREQROL 500/700/800, SENSORLESS SERVO" is selected for "Controller Type" in the GOT setting, set **Pr.999**="11" to configure the GOT initial setting.
  - When "FREQROL 800 (Automatic Negotiation)" is selected for "Controller Type" in the GOT setting, the GOT automatic connection can be used. When "FREQROL 800 (Automatic Negotiation)" is selected for "Controller Type" in the GOT setting and the GOT automatic connection is not used, set **Pr.999**="13" to configure the GOT initial setting. (Refer to page 494)
- Initial setting with the GOT1000 series
  - Set **Pr.999**="11" to configure the GOT initial setting.

NOTE

- Always perform an inverter reset after the initial setting.
- For the details of connection with GOT, refer to the Instruction Manual of GOT.

◆Rated frequency (Pr.999 = "20 (50 Hz), 21 (60 Hz)")

Pr.	Name	Initial value		Pr.999 = "21"	Pr.999 = "20"	Refer to page
		FM type	CA type			
3	Base frequency	60 Hz	50 Hz	60 Hz	50 Hz	497
4	Multi-speed setting (high speed)	60 Hz	50 Hz	60 Hz	50 Hz	222
20	Acceleration/deceleration reference frequency	60 Hz	50 Hz	60 Hz	50 Hz	187
37	Speed display	0		0		261
55	Frequency monitoring reference	60 Hz	50 Hz	60 Hz	50 Hz	273
66	Stall prevention operation reduction starting frequency	60 Hz	50 Hz	60 Hz	50 Hz	248
125 (903)	Terminal 2 frequency setting gain frequency	60 Hz	50 Hz	60 Hz	50 Hz	314
126 (905)	Terminal 4 frequency setting gain frequency	60 Hz	50 Hz	60 Hz	50 Hz	
263	Subtraction starting frequency	60 Hz	50 Hz	60 Hz	50 Hz	426
266	Power failure deceleration time switchover frequency	60 Hz	50 Hz	60 Hz	50 Hz	
386	Frequency for maximum input pulse	60 Hz	50 Hz	60 Hz	50 Hz	218
390	% setting reference frequency	60 Hz	50 Hz	60 Hz	50 Hz	480
505	Speed setting reference	60 Hz	50 Hz	60 Hz	50 Hz	261
584	Auxiliary motor 1 starting frequency	60 Hz	50 Hz	60 Hz	50 Hz	406
585	Auxiliary motor 2 starting frequency	60 Hz	50 Hz	60 Hz	50 Hz	
586	Auxiliary motor 3 starting frequency	60 Hz	50 Hz	60 Hz	50 Hz	
C14 (918)	Terminal 1 gain frequency (speed)	60 Hz	50 Hz	60 Hz	50 Hz	314
1013	Emergency drive running speed after retry reset	60 Hz	50 Hz	60 Hz	50 Hz	238

5.4.16 Extended parameter display and user group function

This function restricts the parameters that are read by the operation panel and the parameter unit.

Pr.	Name	Initial value		Setting range	Description
		FM	CA		
160 **E440**	**User group read selection**	9999	0	9999	Only simple mode parameters can be displayed.
				0	Simple mode and extended parameters can be displayed.
				1	Only parameters registered in user groups can be displayed.
172 **E441**	**User group registered display/batch clear**	0		(0 to 16)	Displays the number of groups that are registered as user groups. (Read-only)
				9999	Batch clear of user group registrations
173 **E442**	**User group registration**	9999*1		0 to 1999, 9999	Sets the parameter number to register for the user group.
174 **E443**	**User group clear**	9999*1		0 to 1999, 9999	Sets the parameter number to clear from the user group.

*1 The read value is always "9999".

◆Display of simple mode parameters and extended parameters (Pr.160)

- When **Pr.160** = "9999", only the simple mode parameters can be displayed on the operation panel and the parameter unit. (For the simple mode parameters, refer to the parameter list page 112.)
- With the initial value (**Pr.160** = "0"), simple mode parameters and extended parameters can be displayed.

NOTE

- When a plug-in option in installed on the inverter, the option parameters can also be read.
- Every parameter can be read regardless of the **Pr.160** setting when reading parameters via a communication option.
- When reading the parameters using the RS-485 terminals, all parameters can be read regardless of the **Pr.160** setting by setting **Pr.550 NET mode operation command source selection** and **Pr.551 PU mode operation command source selection**.

Pr.551	Pr.550	Pr.160 enabled/disabled
1 (RS-485)	-	Enabled
2 (PU) 3 (USB) 9999 (Automatic determination) (Initial value)	0 (Communication option)	Enabled
	1 (RS-485)	Disabled (All can be read)
	9999 (Automatic determination) (Initial value)	With communication option: Enabled
		Without communication option: Disabled (All can be read)

- When the LCD operation panel (FR-LU08) or the parameter unit (FR-PU07) is installed, **Pr.15 Jog frequency**, **Pr.16 Jog acceleration/deceleration time**, **C42(Pr.934) PID display bias coefficient**, **C43(Pr.934) PID display bias analog value**, **C44(Pr.935) PID display gain coefficient**, **C45(Pr.935) PID display gain analog value** and **Pr.991 PU contrast adjustment** are displayed as simple mode parameters.

◆User group function (Pr.160, Pr.172 to Pr.174)

- The user group function is a function for displaying only the parameters required for a setting.
- A maximum of 16 parameters from any of the parameters can be registered in a user group. When **Pr.160**="1", reading/writing is enabled only for the parameters registered in user groups. (Parameters not registered in user groups can no longer be read.)
- To register a parameter in a user group, set the parameter number in **Pr.173**.
- To clear a parameter from a user group, set the parameter number in **Pr.174**. To batch clear all the registered parameters, set **Pr.172** ="9999".

◆Registering a parameter in a user group (Pr.173)

• To register **Pr.3** in a user group

	Operation
1.	Power ON Make sure the motor is stopped.
2.	Changing the operation mode Press [PU EXT] to choose the PU operation mode. [PU] indicator is on.
3.	Parameter setting mode Press [MODE] to select the parameter setting mode. (The parameter number read previously appears.)
4.	Selecting the parameter number Turn dial until P. 173 **(Pr.173)** appears.
5.	Selecting the parameter number Press [SET] to display " 9999 ".
6.	Parameter registration Turn dial until 3 **(Pr.3)** appears. Press [SET] to register the parameter. P. 173 and 3 flicker alternately. To continue adding parameters, repeat steps 5 and 6.

◆Clearing a parameter from a user group (Pr.174)

• To delete **Pr.3** from a user group

	Operation
1.	Power ON Make sure the motor is stopped.
2.	Changing the operation mode Press [PU EXT] to choose the PU operation mode. [PU] indicator is on.
3.	Parameter setting mode Press [MODE] to select the parameter setting mode. (The parameter number read previously appears.)
4.	Selecting the parameter number Turn dial until P. 174 **(Pr.174)** appears.
5.	Selecting the parameter number Press [SET] to display " 9999 ".
6.	Clearing the parameter Turn dial until 3 **(Pr.3)** appears. Press [SET] to delete the parameter. P. 174 and 3 flicker alternately. To continue deleting parameters, repeat steps 5 and 6.

NOTE

- **Pr.77 Parameter write selection, Pr.160, Pr.296 Password lock level, Pr.297 Password lock/unlock and Pr.991 PU contrast adjustment** can always be read regardless of the user group setting. (For **Pr.991**, only when the FR-LU08 or the FR-PU07 is connected.)
- **Pr.77, Pr.160, Pr.172 to Pr.174, Pr.296, Pr.297** cannot be registered in a user group.
- When **Pr.174** is read, "9999" is always displayed. "9999" can be written, but it does not function.
- **Pr.172** is disabled if set to a value other than "9999".

Parameters referred to

Pr.15 Jog frequency, Pr.16 Jog acceleration/deceleration time page 221
Pr.77 Parameter write selection page 169
Pr.296 Password lock level, Pr.297 Password lock/unlock page 171
Pr.550 NET mode operation command source selection page 210
Pr.551 PU mode operation command source selection page 210
Pr.991 PU contrast adjustment page 165

5.4.17 PWM carrier frequency and Soft-PWM control

The motor sound can be changed.

Pr.	Name	Initial value	Setting range	Description
72 **E600**	**PWM frequency selection**	2	0 to 15*1	The PWM carrier frequency can be changed. The setting displayed is in [kHz]. Note that 0 indicates 0.7 kHz, 15 indicates 14.5 kHz, and 25 indicates 2.5 kHz. (The setting value "25" is for the sine wave filter.)
			0 to 6, 25*2	
240 **E601**	**Soft-PWM operation selection**	1	0	Soft-PWM disabled
			1	The soft-PWM is enabled.
260 **E602**	**PWM frequency automatic switchover**	1	0	The PWM carrier frequency is constant regardless of the load. When the carrier frequency is set to 3 kHz or higher (**Pr.72** ≥ 3), perform continuous operation at less than 85% of the inverter rated current.
			1	When the load increases, the PWM carrier frequency is reduced.

*1 The setting range for the FR-F820-02330(55K) or lower and FR-F840-01160(55K) or lower.
*2 The setting range for the FR-F820-03160(75K) or higher and FR-F840-01800(75K) and higher.

◆Changing the PWM carrier frequency (Pr.72)

- The PWM carrier frequency of the inverter can be changed.
- Changing the PWM carrier frequency can be effective for avoiding the resonance frequency of the mechanical system or motor, as a countermeasure against EMI generated from the inverter, or for reducing leakage current caused by PWM switching.
- Under PM motor control, the following carrier frequencies are used.

Pr.72 setting	Carrier frequency (kHz)
0 to 5	2
6 to 9	6*1
10 to 13	10*1
14, 15	14*1

*1 In the low-speed range (slower than 10% of the rated motor frequency), the carrier frequency is automatically changed to 2 kHz. (For FR-F820-00490(11K) or lower and FR-F840-00250(11K) or lower)

- When using the optional sine wave filter (MT-BSL/BSC), set **Pr.72** = "25" (2.5 kHz). (FR-F820-03160(75K) or higher, FR-F840-01800(75K) or higher.)

NOTE

- When **Pr.72**="25", the following limitations apply.
  - V/F control is forcibly set.
  - Soft-PWM control is disabled.
  - The maximum output frequency is 60 Hz.

◆Soft-PWM control (Pr.240)

- Soft-PWM control is a control method that changes the motor noise from a metallic sound into an inoffensive, complex tone.
- Setting **Pr.240** = "1" will enable the Soft-PWM control.
- To enable the Soft-PWM control for the FR-F820-02330(55K) or lower and FR-F840-01160(55K) or lower, set **Pr.72** to "5 kHz or less".
  To enable it for the FR-F820-03160(75K) or higher and FR-F840-01800(75K) or higher , set **Pr.72** to "4 kHz or less".

NOTE

- While a sine wave filter (**Pr.72** = "25") is being used, the Soft-PWM control is disabled.

◆PWM carrier frequency automatic reduction function (Pr.260)

- Setting **Pr.260**="1 (initial value)" will enable the PWM carrier frequency auto-reduction function. If a heavy load is continuously applied while the inverter carrier frequency is set to 3 kHz or higher (**Pr.72** ≥ "3"), the carrier frequency is automatically reduced to prevent occurrence of the inverter overload trip (electronic thermal O/L relay function) (E.THT). The carrier frequency is reduced to as low as 2 kHz. (Motor noise increases, but not to the point of failure.)
- The auto-reduction function is activated for a continuous operation with the 85% or higher rated inverter current.
- When continuous operation with FR-F840-02600(110K) or higher is performed at 85% of the rated inverter current or higher, the automatic reduction function is activated regardless of the **Pr.570** setting.
- When **Pr.260**="0", the carrier frequency becomes constant (**Pr.72** setting) regardless of the load, making the motor sound uniform. However, when the SLD rating is selected, (**Pr.570**="0"), the operation is the same as **Pr.260**="1".

NOTE

- Reducing the PWM carrier frequency is effective as a countermeasure against EMI from the inverter or for reducing leakage current, but doing so increases the motor noise.
- When the PWM carrier frequency is set to 1 kHz or lower (**Pr.72** ≤ 1), the increase in the harmonic current causes the fast-response current limit to activate before the stall prevention operation, which may result in torque shortage. In this case, disable the fast-response current limit in **Pr.156 Stall prevention operation selection**.

Parameters referred to

Pr.156 Stall prevention operation selection page 248
Pr.570 Multiple rating setting page 168
Pr.800 Control method selection page 143

5.4.18 Inverter parts life display

The degree of deterioration of the control circuit capacitor, main circuit capacitor, cooling fan, and inrush current limit circuit can be diagnosed on the monitor.
When a part approaches the end of its life, an alarm can be output by self diagnosis to prevent a fault.
(Note that the life diagnosis of this function should be used as a guideline only, because with the exception of the main circuit capacitor, the life values are theoretical calculations.)

Pr.	Name	Initial value	Setting range	Description
255 E700	**Life alarm status display**	0	(0 to 15)*1	Displays whether or not the parts of the control circuit capacitor, main circuit capacitor, cooling fan, and inrush current limit circuit have reached the life alarm output level. Read-only.
256 E701 *2	**Inrush current limit circuit life display**	100%	(0 to 100%)	Displays the deterioration degree of the inrush current limit circuit. Read-only.
257 E702	**Control circuit capacitor life display**	100%	(0 to 100%)	Displays the deterioration degree of the control circuit capacitor. Read-only.
258 E703 *2	**Main circuit capacitor life display**	100%	(0 to 100%)	Displays the deterioration degree of the main circuit capacitor. Read-only. The value measured by **Pr.259** is displayed.
259 E704 *2	**Main circuit capacitor life measuring**	0	0, 1 (2, 3, 8, 9)	Setting "1" and turning the power supply OFF starts the mea surement of the main circuit capacitor life. If the setting value of **Pr.259** becomes "3" after turning the power supply ON again, it means that the measurement is completed. The deterioration degree is read to **Pr.258**.

*1 The setting range (reading only) for separated converter types is "0, 1, 4, or 5".
*2 The setting is available only for standard models.

◆Life alarm display and signal output (Y90 signal, Pr.255)

POINT

- In the life diagnosis of the main circuit capacitor, the alarm signal (Y90) is not output unless measurement by turning OFF the power supply is performed.

- Use **Pr.255 Life alarm status display** and the life alarm signal (Y90) to check whether or not the parts of the control circuit capacitor, main circuit capacitor, cooling fan or inrush current limit circuit have reached the life alarm output level.

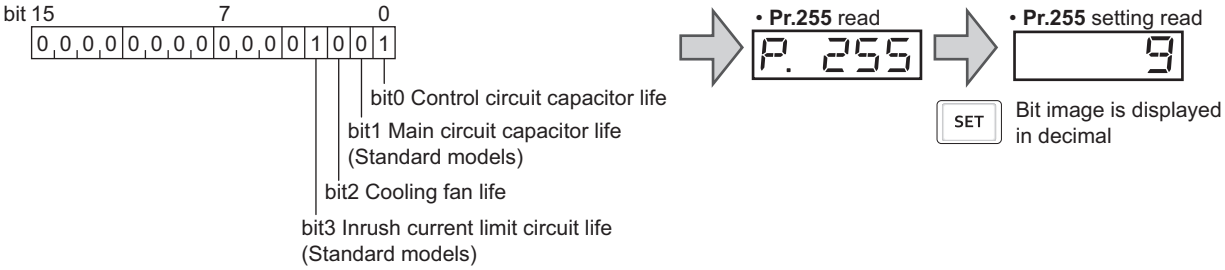

Pr.255		bit3	bit2	bit1	bit0
Decimal	Binary				
15	1111	○	○	○	○
14	1110	○	○	○	×
13	1101	○	○	×	○
12	1100	○	○	×	×
11	1011	○	×	○	○
10	1010	○	×	○	×
9	1001	○	×	×	○
8	1000	○	×	×	×
7	0111	×	○	○	○
6	0110	×	○	○	×
5	0101	×	○	×	○
4	0100	×	○	×	×
3	0011	×	×	○	○
2	0010	×	×	○	×
1	0001	×	×	×	○
0	0000	×	×	×	×

○: With warnings, ×: Without warnings

- The life alarm signal (Y90) turns ON when any of the control circuit capacitor, main circuit capacitor, cooling fan or inrush current limit circuit reaches the life alarm output level.
- For the terminal used for the Y90 signal, set "90" (positive logic) or "190" (negative logic) in any of **Pr.190 to Pr.196 (output terminal function selection)**.

NOTE

- When using an option (FR-A8AY, FR-A8AR, FR-A8NC, FR-A8NCE), the life can be output separately to the control circuit capacitor life signal (Y86), main circuit capacitor life signal (Y87), cooling fan life signal (Y88), and inrush current limit circuit life signal (Y89).
- Changing the terminal assignment using **Pr.190 to Pr.196 (output terminal function selection)** may affect the other functions. Set parameters after confirming the function of each terminal.

◆Life display of the inrush current limit circuit (Pr.256) (Standard models)

- The life of the inrush current limit circuit (relay, contactor and inrush resistor) is displayed in **Pr.256**.
- The number of contact (relay, contactor, thyristor) ON times is counted, and it is counted down from 100% (0 time) every 1%/10,000 times. As soon as 10% (900,000 times) is reached, **Pr.255** bit 3 is turned ON and also a warning is output to the Y90 signal.

◆Life display of the control circuit capacitor (Pr.257)

- The deterioration degree of the control circuit capacitor is displayed in **Pr.257**.
- In the operating status, the control circuit capacitor life is calculated from the energization time and temperature, and is counted down from 100%. As soon as the control circuit capacitor life falls below 10%, **Pr.255** bit 0 is turned ON and also a warning is output to the Y90 signal

◆Life display of the main circuit capacitor (Pr.258, Pr.259) (Standard models)

POINT

- For accurate life measurement of the main circuit capacitor, wait three hours or longer after turning OFF. The temperature left in the main circuit capacitor affects measurement.

- The deterioration degree of the main circuit capacitor is displayed in **Pr.258**.
- With the main circuit capacitor capacity at factory shipment as 100%, the capacitor life is displayed in **Pr.258** every time measurement is made. When the measured value falls to 85% or lower, **Pr.255** bit 1 is turned ON and also a warning is output to the Y90 signal.
- Measure the capacitor capacity according to the following procedure and check the deterioration degree of the capacitor capacity.
  1) Check that the motor is connected and at a stop.
  2) Set "1" (measuring start) in **Pr.259**.
  3) Switch the power OFF. The inverter applies DC voltage to the motor to measure the capacitor capacity while the inverter is OFF.
  4) After confirming that the power lamp is OFF, turn ON the power again.
  5) Check that "3" (measurement complete) is set in **Pr.259**, read **Pr.258**, and check the deterioration degree of the main circuit capacitor.

Pr.259	Description	REMARKS
0	No measurement	Initial value
1	Measurement start	Measurement starts when the power supply is switched OFF
2	During measurement	Only displayed and cannot be set
3	Measurement complete	
8	Forced end	
9	Measurement error	

NOTE

- When the main circuit capacitor life is measured under the following conditions, "forced end" (**Pr.259** ="8") or", easurement error" (**Pr.259** ="9") may occur, or the status may remain in "measurement start" (**Pr.259** ="1"). To perform measurement, first eliminate the following conditions. Under the following conditions, even if "measurement complete" (**Pr.259** ="3") is reached, measurement cannot be performed correctly.
  - FR-HC2, FR-CV, MT-RC, or a sine wave filter is connected.
  - Terminals R1/L11, S1/L21 or DC power supply is connected to terminals P/+ and N/-.
  - The power supply is switched ON during measurement.
  - The motor is not connected to the inverter.
  - The motor is running (coasting).
  - The motor capacity is smaller than the inverter capacity by two ranks or more.
  - The inverter is tripped or a fault occurred while the power was OFF.
  - The inverter output is shut off with the MRS signal.
  - The start command is given while measuring.
  - The applied motor setting is incorrect.
- Operation environment: surrounding air temperature (annual average of 40°C (free from corrosive gas, flammable gas, oil mist, dust and dirt)).
  Output current (80% of the inverter rating)
- Since repeated inrush currents at power ON will shorten the life of the converter circuit, frequent starts and stops of the magnetic contactor must be avoided.

WARNING

- **When measuring the main circuit capacitor capacity (Pr.259 ="1"), the DC voltage is applied to the motor for about 1 s at power OFF. Never touch the motor terminal, etc. right after powering OFF to prevent an electric shock.**

◆Life display of the cooling fan

- If a cooling fan speed of less than the specified speed (refer below) is detected, Fan alarm FN (FN) is displayed on the operation panel and the parameter unit. As an alarm display, **Pr.255** bit 2 is turned ON and also a warning is output to the Y90 signal and Alarm (LF) signal.
- For the terminal used for the LF signal, set "98" (positive logic) or "198" (negative logic) in any of **Pr.190 to Pr.196 (output terminal function selection)**.

Capacity	Warning level
FR-F820-00250(5.5K) or lower, FR-F820-03160(75K) or higher FR-F840-00126(5.5K) or lower	Less than 50% of the rated rotations per minute
FR-F820-00340(7.5K) to FR-F820-02330(55K) FR-F840-00170(7.5K) to FR-F840-03610(160K)	Less than 70% of the rated rotations per minute
FR-F840-04320(185K) or higher FR-F842-07700(355K) or higher	Approx. less than 1700 r/min

NOTE

- When the inverter is mounted with two ore more cooling fans, "FN" is displayed with one or more fans with speed of 50% or less.
- Changing the terminal assignment using **Pr.190 to Pr.196 (output terminal function selection)** may affect the other functions. Set parameters after confirming the function of each terminal.
- For replacement of each part, contact the nearest Mitsubishi FA center.

5.4.19 Maintenance timer alarm

The maintenance timer output signal (Y95) is output when the inverter's cumulative energization time reaches the time period set with the parameter. MT1, MT2 or MT3 is displayed on the operation panel.
This can be used as a guideline for the maintenance time of peripheral devices.

Pr.	Name	Initial value	Setting range	Description
503 **E710**	**Maintenance timer 1**	0	0(1 to 9998)	Displays the inverter's cumulative energization time in increments of 100 h (read-only). Writing the setting of "0" clears the cumulative energization time while **Pr.503** = "1 to 9998". (Writing is disabled when **Pr.503** = "0".)
504 **E711**	**Maintenance timer 1 warning output set time**	9999	0 to 9998	Set the time until the maintenance timer signal (Y95) is output. MT1 is displayed on the operation panel.
			9999	No function
686 **E712**	**Maintenance timer 2**	0	0(1 to 9998)	The same function as **Pr.503**.
687 **E713**	**Maintenance timer 2 warning output set time**	9999	0 to 9998	The same function as **Pr.504**. MT2 is displayed on the operation panel.
			9999	
688 **E714**	**Maintenance timer 3**	0	0(1 to 9998)	The same function as **Pr.503**.
689 **E715**	**Maintenance timer 3 warning output set time**	9999	0 to 9998	The same function as **Pr.504**. MT3 is displayed on the operation panel.
			9999	

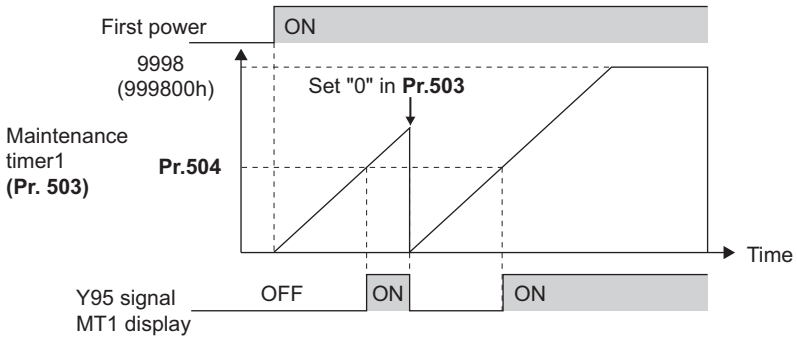

Operation example of the maintenance timer 1 (**Pr.503, Pr.504**) (with both MT2 and MT3 OFF)

- The cumulative energization time of the inverter is stored in the EEPROM every hour and displayed in **Pr.503 (Pr.686, Pr.688)** in 100 h increments. **Pr.503 (Pr.686, Pr.688)** is clamped at 9998 (999800 h).
- When the value in **Pr.503 (Pr.686, Pr.688)** reaches the time (100 h increments) set in **Pr.504 (Pr.687, Pr.689)**, Maintenance timer signal (Y95) is output, and also MT 1 (MT1), MT 2 (MT2), or MT 3 (MT3) is displayed on the operation panel.
- For the terminal used for Y95 signal output, assign the function by setting "95 (positive logic)" or "195 (negative logic)" in any of **Pr.190 to Pr.196 (output terminal function selection)**.

NOTE

- The Y95 signal turns ON when any of MT1, MT2 or MT3 is activated. It does not turn OFF unless all of MT1, MT2 and MT3 are cleared.
- If all of MT1, MT2 and MT3 are activated, they are displayed in the priority of "MT1 > MT2 > MT3".
- MT is displayed on the FR-PU07 parameter unit if any of MT1, MT2 or MT3 is activated.
- The cumulative energization time is counted every hour. Energization time of less than 1 h is not counted.
- Changing the terminal assignment using **Pr.190 to Pr.196 (output terminal function selection)** may affect the other functions. Set parameters after confirming the function of each terminal.

Parameters referred to

Pr.190 to Pr.196 (output terminal function selection) ☞ page 288

5.4.20 Current average value monitor signal

The output current average value during constant-speed operation and the maintenance timer value are output to the current average value monitor signal (Y93) as a pulse. The output pulse width can be used in a device such as the I/O unit of a programmable controller as a guideline for the maintenance time for mechanical wear, belt stretching, or deterioration of devices with age.
The pulse is repeatedly output during constant-speed operation in cycles of 20 s to the Current average monitor signal (Y93).

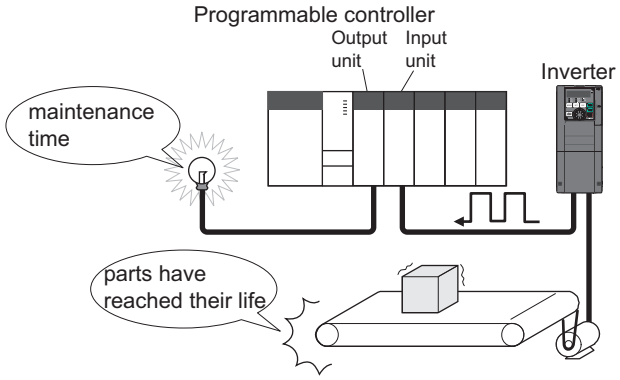

Pr.	Name	Initial value	Setting range	Description
555 E720	**Current average time**	1 s	0.1 to 1 s	Set the time for calculating the average current during start pulse output (1 s).
556 E721	**Data output mask time**	0 s	0 to 20 s	Set the time for not obtaining (masking) transitional state data.
557 E722	**Current average value monitor signal output reference current**	Rated inverter current	0 to 500 A*1	Set the reference (100%) for outputting the output current average value signal.
			0 to 3600 A*2	

*1 Initial value for the FR-F820-02330(55K) or lower and FR-F840-01160(55K) or lower.
*2 Initial value for the FR-F820-03160(75K) or higher and FR-F840-01800(75K) and higher.

◆Operation example

- The pulse output of Current average monitor signal (Y93) is indicated below.
- For the terminal used for Y93 signal output, assign the function by setting "93 (positive logic)" or "193 (negative logic)" in any of **Pr.190 to Pr.194 (output terminal function selection)**. (This cannot be assigned by setting in **Pr.195 ABC1 terminal function selection or Pr.196 ABC2 terminal function selection**.)

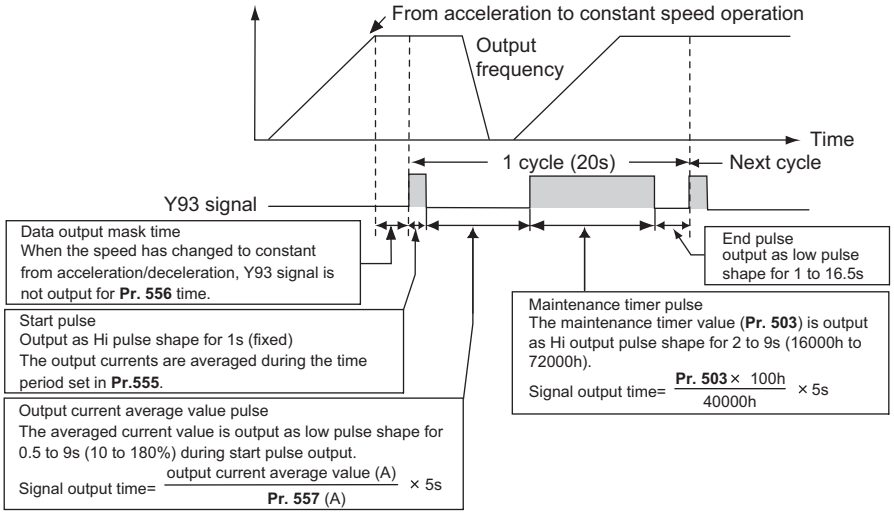

◆Pr.556 Data output mask time setting

- Immediately after acceleration/deceleration is shifted to constant-speed operation, the output current is unstable (transitional state). Set the time for not obtaining (masking) transitional state data in **Pr.556**.

◆Pr.555 Current average time setting

- The output current average is calculated during start pulse (1 s) HIGH output. Set the time for calculating the average current during start pulse output in **Pr.555**.

◆Pr.557 Current average value monitor signal output reference current setting

- Set the reference (100%) for outputting the output current average value signal. The signal output time is calculated with the following formula.

$$\frac{\text{Output current average value}}{\textbf{Pr.557} \text{ setting value}} \times 5 \text{ s} \quad \text{(Output current average value 100\%/5 s)}$$

The output time range is 0.5 to 9 s. When the output current average value is less than 10% of the setting value in **Pr.557**, the output time is 0.5 s, and when it is more than 180%, the output time is 9 s.
For example, when **Pr.557** = "10 A" and the output current average value is 15 A:
15 A/10 A × 5 s = 7.5 s, thus the current average value monitor signal is Low output in 7.5 s intervals.

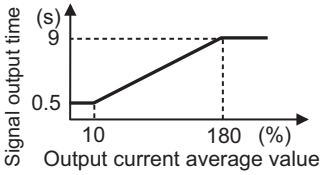

◆Pr.503 Maintenance timer 1 output

- After LOW output of the output current value is performed, HIGH output of the maintenance timer value is performed. The maintenance timer value output time is calculated with the following formula.

$$\frac{\textbf{Pr.503} \times 100}{40000 \text{ h}} \times 5 \text{ s} \quad \text{(Maintenance timer value 100\%/5 s)}$$

The output time range is 2 to 9 s. When **Pr.503** is less than 16000 h, the output time is 2 s, and when it is more than 72000 h, the output time is 9 s.

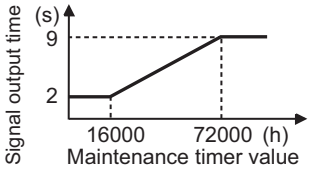

NOTE

- Masking of the data output and sampling of the output current are not performed during acceleration/deceleration.
- If constant speed changes to acceleration or deceleration during start pulse output, it is judged as invalid data, and HIGH output in 3.5 s intervals is performed for the start pulse and LOW output in 16.5 s intervals is performed for the end signal. After the start pulse output is completed, minimum 1-cycle signal output is performed even if acceleration/deceleration is performed.

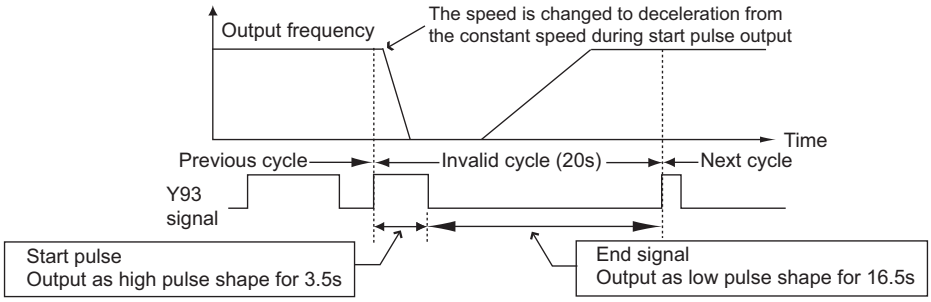

- If the output current value (inverter output current monitor) is 0 A at the completion of the 1-cycle signal output, no signal is output until the next constant-speed state.
- Under the following conditions, the Y93 signal is output with Low output in 20 s intervals (no data output).
  - When acceleration or deceleration is operating at the completion of the 1-cycle signal output
  - When automatic restart after instantaneous power failure (**Pr.57 Restart coasting time** ≠ "9999") is set, and the 1-cycle signal output is completed during the restart operation
  - When automatic restart after instantaneous power failure (**Pr.57** ≠ "9999") is set, and the restart operation was being performed at the completion of data output masking
- **Pr.686 Maintenance timer 2** and **Pr.688 Maintenance timer 3** cannot be output.
- Changing the terminal assignment using **Pr.190 to Pr.196 (output terminal function selection)** may affect the other functions. Set parameters after confirming the function of each terminal.

Parameters referred to

Pr.57 Restart coasting time page 414, page 420
Pr.190 to Pr.196 (output terminal function selection) page 288
Pr.503 Maintenance timer 1, Pr.686 Maintenance timer 2, Pr.688 Maintenance timer 3 page 184

5.5 (F) Setting of acceleration/deceleration time and acceleration/deceleration pattern

Purpose	Parameter to set			Refer to page
To set the motor acceleration/ deceleration time	Acceleration/ deceleration time	P.F000 to P.F003, P.F010, P.F011, P.F020 to P.F022, P.F070, P.F071	Pr.7, Pr.8, Pr.16, Pr.20, Pr.21, Pr.44, Pr.45, Pr.147, Pr.611, Pr.791, Pr.792	187
To set the acceleration/ deceleration pattern suitable for an application	Acceleration/ deceleration pattern and backlash measures	P.F100, P.F200 to P.F203	Pr.29, Pr.140 to Pr.143	191
To command smooth speed transition with terminals	Remote setting function	P.F101	Pr.59	194
To set the starting frequency	Starting frequency and start-time hold	P.F102, P.F103	Pr.13, Pr.571	197, 198

5.5.1 Setting the acceleration and deceleration time

The following parameters are used to set motor acceleration/deceleration time.
Set a larger value for a slower acceleration/deceleration, and a smaller value for a faster acceleration/deceleration.
For the acceleration time at automatic restart after instantaneous power failure, refer to **Pr.611 Acceleration time at a restart** (page 414, page 420).

Pr.	Name	Initial value FM	Initial value CA	Setting range	Description	
20 F000	Acceleration/ deceleration reference frequency	60 Hz	50 Hz	1 to 590 Hz	Set the frequency that will be the basis of acceleration/ deceleration time. As acceleration/deceleration time, set the frequency change time from a stop status to **Pr.20**.	
21 F001	Acceleration/ deceleration time increments	0		0	Increment: 0.1 s Range: 0 to 3600 s	Select the increment for the acceleration/deceleration time setting and the setting range.
				1	Increment: 0.01 s Range: 0 to 360 s	
16 F002	Jog acceleration/ deceleration time	0.5 s		0 to 3600 s (360 s*1)	Set the acceleration/deceleration time for JOG operation (from stop status to **Pr.20**). Refer to page 221	
611 F003	Acceleration time at a restart	9999		0 to 3600 s, 9999	Set the acceleration time for restart (from stop status to **Pr.20**). When "9999" is set, standard acceleration time (like **Pr.7**) is applied as the acceleration time at restart. Refer to page 414, page 420.	
7 F010	Acceleration time	5 s*2		0 to 3600 s (360 s*1)	Set the motor acceleration time (from stop status to **Pr.20**).	
		15 s*3				
8 F011	Deceleration time	10 s*2		0 to 3600 s (360 s*1)	Set the motor deceleration time (from **Pr.20** to stop status).	
		30 s*3				
44 F020	Second acceleration/ deceleration time	5 s		0 to 3600 s (360 s*1)	Set the acceleration/deceleration time when the RT signal is ON.	
45 F021	Second deceleration time	9999		0 to 3600 s (360 s*1)	Set the deceleration time when the RT signal is ON.	
				9999	Acceleration time = deceleration time	
147 F022	Acceleration/ deceleration time switching frequency	9999		0 to 590 Hz	Set the frequency where the acceleration/deceleration time switches to the time set in **Pr.44** and **Pr.45**.	
				9999	No function	
791 F070	Acceleration time in low-speed range	9999		0 to 3600 s (360 s*1)	Set the acceleration time in a low-speed range (less than 10% of the rated motor frequency).	
				9999	The acceleration time set in **Pr.7** is applied. (While RT signal is ON, the second function is enabled.)	
792 F071	Deceleration time in low-speed range	9999		0 to 3600 s (360 s*1)	Set the deceleration time in a low-speed range (less than 10% of the rated motor frequency).	
				9999	The deceleration time set in **Pr.8** is applied. (While RT signal is ON, the second function is enabled.)	

*1 Depends on the **Pr.21 Acceleration/deceleration time increments** setting. The initial value for the setting range is "0 to 3600 s", and for the setting increment is "0.1 s".
*2 Initial value for the FR-F820-00340(7.5K) or lower and FR-F840-00170(7.5K) or lower.
*3 Initial value for the FR-F820-00490(11K) or higher and FR-F840-00250(11K) and higher.

◆Control block diagram

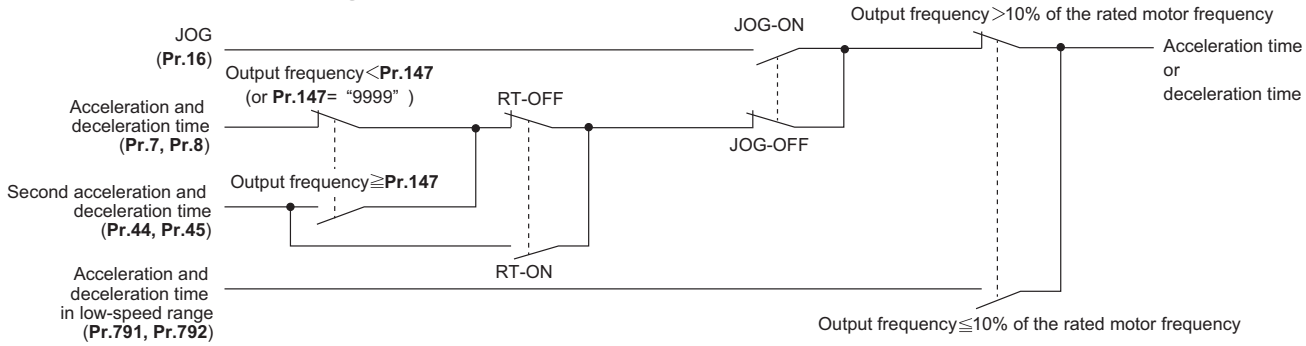

◆Acceleration time setting (Pr.7, Pr.20)

- Use **Pr.7 Acceleration time** to set the acceleration time required to reach **Pr.20 Acceleration/deceleration reference frequency** from stop status.
- Set the acceleration time according to the following formula.

Acceleration time setting = **Pr.20** × Acceleration time from stop status to maximum frequency / (maximum frequency - **Pr.13**)

- For example, the following calculation is performed to find the setting value for **Pr.7** when increasing the output frequency to the maximum frequency of 50 Hz in 10 s with **Pr.20** = "60 Hz (initial value)" and **Pr.13** = "0.5 Hz".

Pr.7 = 60 Hz × 10 s / (50 Hz - 0.5 Hz)
≒12.1 s

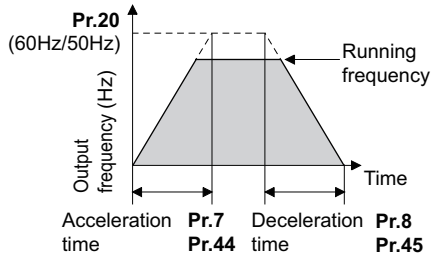

◆Deceleration time setting (Pr.8, Pr.20)

- Use **Pr.8 Deceleration time** to set the deceleration time required to reach a stop status from to **Pr.20 Acceleration/deceleration reference frequency**.
- Set the deceleration time according to the following formula.

Deceleration time setting = **Pr.20** × deceleration time from maximum frequency to stop / (maximum frequency - **Pr.10**)

- For example, the following calculation is used to find the setting value for **Pr.8** when increasing the output frequency to the maximum frequency of 50 Hz in 10 s with **Pr.20** = 120 Hz and **Pr.10** = 3 Hz.

Pr.8 = 120 Hz × 10 s / (50 Hz - 3 Hz)
≒25.5 s

NOTE

- If the acceleration/deceleration time is set, the actual motor acceleration/deceleration time cannot be made shorter than the shortest acceleration/deceleration time determined by the mechanical system J (moment of inertia) and motor torque.
- If the **Pr.20** setting is changed, the **Pr.125** and **Pr.126** (frequency setting signal gain frequency) settings do not change. Set **Pr.125** and **Pr.126** to adjust the gains.
- Under PM motor control, if the protective function (E.OLT) is activated due to insufficient torque in the low-speed range, set longer acceleration/deceleration times only in the low-speed range in **Pr.791 Acceleration time in low-speed range** and **Pr.792 Deceleration time in low-speed range**.

◆Changing the setting range and increments of the acceleration/deceleration time (Pr.21)

- Use **Pr.21** to set the acceleration/deceleration time and minimum setting range.
  Setting value "0" (initial value): 0 to 3600 s (minimum setting increments 0.1 s)
  Setting value "1": 0 to 360 s (minimum setting increments 0.01 s)

NOTE

- Changing the **Pr.21** setting changes the acceleration/deceleration time setting **(Pr.7, Pr.8, Pr.16, Pr.44, Pr.45, Pr.264, Pr.265, Pr.582, Pr.583, Pr.791, Pr.792, Pr.1477, Pr.1478)**. (The **Pr. 611 Acceleration time at a restart** setting is not affected.)

◆Setting multiple acceleration/deceleration times (RT signal, Pr.44, Pr.45, Pr.147)

- **Pr.44 and Pr.45** are valid when the RT signal is ON or when the output frequency is equal to or higher than the frequency set in **Pr.147 Acceleration/deceleration time switching frequency**.
- Even at the frequency lower than the **Pr.147** setting, turning ON the RT signal will switch the acceleration/deceleration time to the second acceleration/deceleration time. The priority of the signals and settings is RT signal > **Pr.147** setting.
- When "9999" is set in **Pr. 45,** the deceleration time becomes equal to the acceleration time (**Pr. 44**).
- If the **Pr.147** setting is equal to or less than the **Pr.10 DC injection brake operation frequency** or the **Pr.13 Starting frequency** setting, the acceleration/deceleration time switches to the **Pr.44 (Pr.45)** when the output frequency reaches or exceeds the **Pr.10 or Pr.13** setting.

Pr.147 setting	Acceleration/deceleration time	Description
9999 (initial value)	**Pr.7, Pr.8**	Acceleration/deceleration time is not automatically changed.
0.00 Hz	**Pr.44, Pr.45**	Second acceleration/deceleration time is applied from the start.
0.01 Hz ≤ **Pr.147** ≤ set frequency	Output frequency < **Pr.147**: **Pr.7, Pr.8** **Pr.147** ≤ output frequency: **Pr.44, Pr.45**	Acceleration/deceleration time is automatically changed.
Set frequency < **Pr.147**	**Pr.7, Pr.8**	Not changed as the frequency has not reached the switchover frequency.

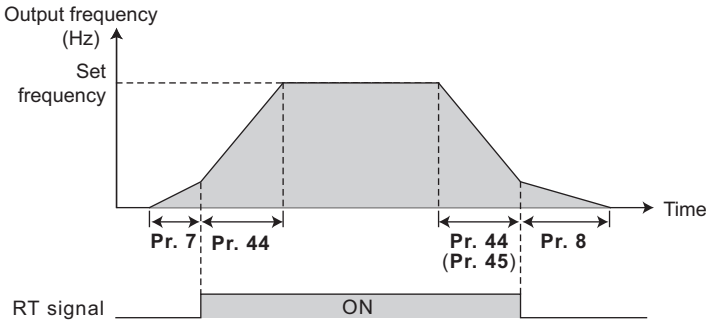

- Switching frequency for each control method

Control method	Switching frequency
V/F control	Output frequency
Advanced magnetic flux vector control	Output frequency before the slip compensation.
PM motor control	Estimated speed converted as frequency

NOTE

- The reference frequency during acceleration/deceleration depends on the **Pr.29 Acceleration/deceleration pattern selection** setting. (Refer to page 191.)
- The RT signal can be assigned to an input terminal by setting **Pr.178 to Pr.189 (input terminal function selection)**. Changing the terminal assignment may affect other functions. Set parameters after confirming the function of each terminal.
- The RT signal acts as the second function selection signal and makes the other second functions valid. (Refer to page 333.)
- RT signal is assigned to the terminal RT in the initial status. Set "3" in any of **Pr.178 to Pr.189 (input terminal function selection)** to assign the RT signal to another terminal.

◆Setting the acceleration/deceleration time in the low-speed range (Pr.791, Pr.792)

- If torque is required in the low-speed range (less than 10% of the rated motor frequency) under PM motor control, set the **Pr.791 Acceleration time in low-speed range** and **Pr.792 Deceleration time in low-speed range** settings higher than the **Pr.7 Acceleration time and Pr.8 Deceleration time** settings so that the mild acceleration/deceleration is performed in the low-speed range. (When RT signal is turned ON, the second acceleration/deceleration time setting is prioritized.)

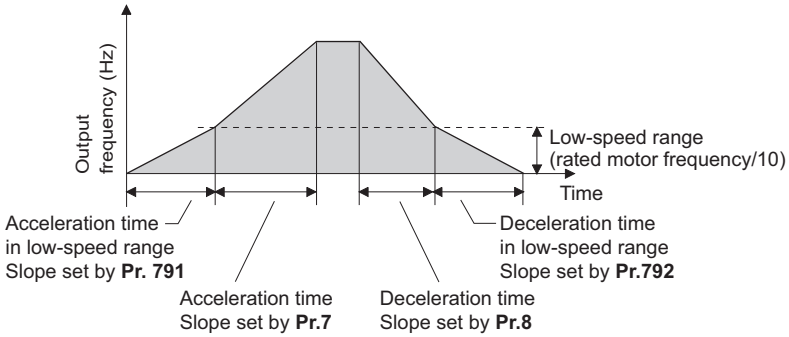

NOTE

- Set **Pr.791** higher than **Pr.7**, and **Pr.792** higher than **Pr.8**. If set as **Pr.791** < **Pr.7**, the operation is performed as **Pr.791** = **Pr.7**. If set as **Pr.792** < **Pr.8**, the operation is performed as **Pr.792** = **Pr.8**.
- Refer to page 583 for the rated motor frequency of MM-EFS/MM-THE4.

Parameters referred to

Pr.3 Base frequency page 497
Pr.10 DC injection brake operation frequency page 502
Pr.29 Acceleration/deceleration pattern selection page 191
Pr.125, Pr.126 (frequency setting gain frequency) page 314
Pr.178 to Pr.182 (input terminal function selection) page 329
Pr.264 Power-failure deceleration time 1, Pr.265 Power-failure deceleration time 2 page 426

5.5.2 Acceleration/deceleration pattern

The acceleration/deceleration pattern can be set according to the application.
In addition, the backlash measures that stop acceleration/deceleration by the frequency or time set with parameters at acceleration/deceleration can be set.

Pr.	Name	Initial value	Setting range	Description
29 **F100**	**Acceleration/deceleration pattern selection**	0	0	Linear acceleration/deceleration
			1	S-pattern acceleration/deceleration A
			2	S-pattern acceleration/deceleration B
			3	Backlash measures
			6	Variable-torque acceleration/deceleration
140 **F200**	**Backlash acceleration stopping frequency**	1 Hz	0 to 590 Hz	Set the stopping frequency and time during backlash measures. Valid by backlash measures (**Pr.29**="3").
141 **F201**	**Backlash acceleration stopping time**	0.5 s	0 to 360 s	
142 **F202**	**Backlash deceleration stopping frequency**	1 Hz	0 to 590 Hz	
143 **F203**	**Backlash deceleration stopping time**	0.5 s	0 to 360 s	

◆Linear acceleration/deceleration (Pr.29 = "0" initial value)

- When the frequency is changed for acceleration, deceleration, etc. during inverter operation, the output frequency is changed linearly (linear acceleration/deceleration) to reach the set frequency without straining the motor and inverter. Linear acceleration/deceleration has a uniform frequency/time slope.

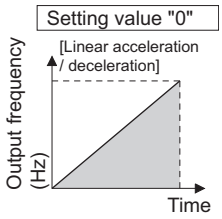

◆S-pattern acceleration/deceleration A (Pr.29 = "1")

- Use this when acceleration/deceleration is required for a short time until a high-speed area equal to or higher than the base frequency, such as for the main shaft of the machine.
- The acceleration/deceleration pattern has the **Pr.3 Base frequency** (**Pr.84 Rated motor frequency** under PM motor control) (fb) as the point of inflection in an S-pattern curve, and the acceleration/deceleration time can be set to be suitable for the motor torque reduction in the constant-power operation range at the base frequency (fb) or more.

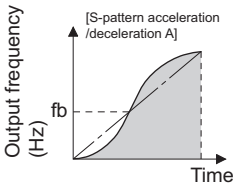

- Acceleration/deceleration time calculation method when the set frequency is equal to or higher than the base frequency

Acceleration time $t = (4/9) \times (T/fb^2) \times f^2 + (5/9) \times T$
Where T is the acceleration/deceleration time (s), f is the set frequency (Hz), and fb is the base frequency (rated motor frequency)

- Reference (0 Hz to set frequency) of acceleration/deceleration time when **Pr.3** = "60 Hz"

Acceleration/deceleration time (s)	Set frequency (Hz)			
	60	120	200	400
5	5	12	27	102
15	15	35	82	305

NOTE

- For the acceleration/deceleration time setting of the S-pattern acceleration/deceleration A, set the time to **Pr.3** (**Pr.84** under PM motor control) instead of **Pr.20 Acceleration/deceleration reference frequency**.

◆S-pattern acceleration/deceleration B (Pr.29 = "2")

- This is useful for preventing collapsing stacks such as on a conveyor. S-pattern acceleration/deceleration B can reduce the impact during acceleration/deceleration by accelerating/decelerating while maintaining an S-pattern from the present frequency (f2) to the target frequency (f1).

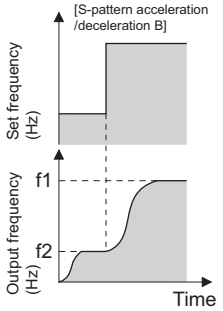

◆Backlash measures (Pr.29 = "3", Pr.140 to Pr.143)

- Reduction gears have an engagement gap and have a dead zone between forward rotation and reverse rotation. This dead zone is called backlash, and this gap disables a mechanical system from following motor rotation. More specifically, a motor shaft develops excessive torque when the direction of rotation changes or when constant-speed operation shifts to deceleration, resulting in a sudden motor current increase or regenerative status.
- To avoid backlash, acceleration/deceleration is temporarily stopped. Set the acceleration/deceleration stopping frequency and time in **Pr.140 to Pr.143**.

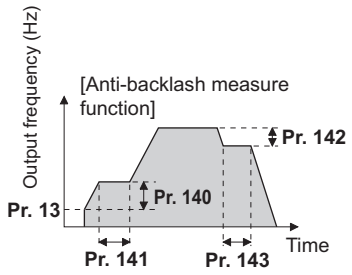

NOTE

- Setting the backlash measures increases the acceleration/deceleration time by the stopping time.

◆Variable-torque acceleration/deceleration (Pr.290 = "6")

- This function is suitable to accelerate/decelerate a variable torque load such as a fan and blower in a short time. Linear acceleration/deceleration is performed in the area where the output frequency > base frequency.

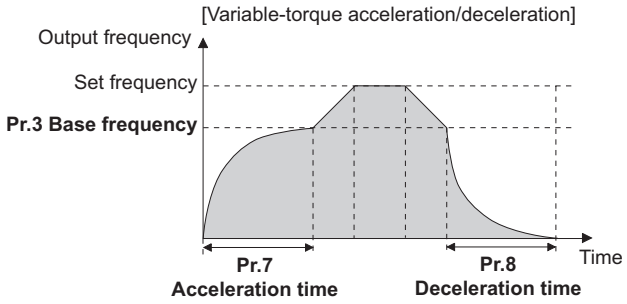

NOTE

- When the base frequency is out of the range 45 to 65 Hz, the linear acceleration/deceleration is performed even if **Pr.29** = "6".
- Even if **Pr.14 Load pattern selection** = "1 (variable torque load)", variable torque acceleration/deceleration setting is prioritized and the inverter operates as **Pr.14** = "0 (constant torque load)".
- For the variable torque acceleration/deceleration time setting, set the time period to reach **Pr.3 Base frequency**. (Not the time period to reach **Pr.20 Acceleration/deceleration reference frequency**.)
- The variable torque acceleration/deceleration is disabled during PM motor control. (Linear acceleration/deceleration is performed.)

Parameters referred to

Pr.3 Base frequency page 497
Pr.7 Acceleration time, Pr.8 Deceleration time, Pr.20 Acceleration/deceleration reference frequency page 187
Pr.10 DC injection brake operation frequency page 502
Pr.178 to Pr.182 (input terminal function selection) page 329

5.5.3 Remote setting function

Even if the operation panel is located away from the enclosure, contact signals can be used to perform continuous variable-speed operation, without using analog signals.
By simply setting this parameter, the acceleration, deceleration and setting clear functions of the remote speed setter (FR-FK) become available.

Pr.	Name	Initial value	Setting range	Description		
				RH, RM, RL signal function	Frequency setting storage function	Deceleration to the frequency lower than the set frequency
59 F101	Restart cushion time	0	0	Multi-speed setting	-	Disabled
			1	Remote setting	With	
			2	Remote setting	Without	
			3	Remote setting	Without (Turning STF/STR OFF clears remotely-set frequency.)	
			11	Remote setting	With	Enabled
			12	Remote setting	Without	
			13	Remote setting	Without (Turning STF/STR OFF clears remotely-set frequency.)	

◆Remote setting function

- Use **Pr.59** to enable/disable the remote setting function and enable/disable the frequency setting storage function during remote setting.
- When **Pr. 59**≠"0" (remote setting function valid), the functions of the RH, RM and RL signals are changed to acceleration (RH), deceleration (RM) and clear (RL).

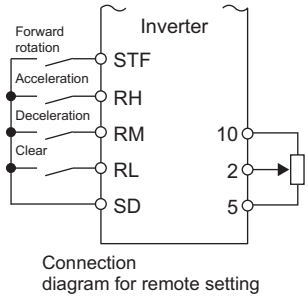

Connection diagram for remote setting

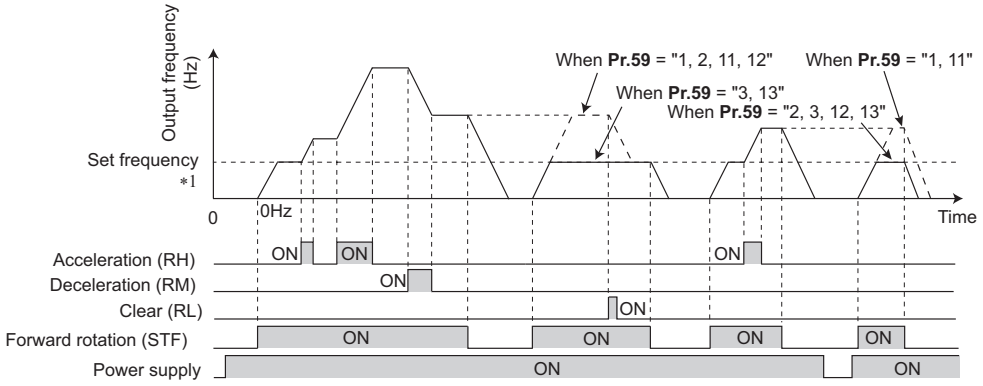

*1 External operation frequency (other than multi-speed) or PU running frequency

◆Acceleration/deceleration operation

- When the acceleration signal (RH) is turned ON, the set frequency increases. The increased speed at this time is determined by the setting of **Pr.44 Second acceleration/deceleration time**. Turning OFF the RH signal will stop increasing the set frequency and run the motor at the frequency at that time.
- When the deceleration signal (RM) is turned ON, the set frequency decreases. The decreased speed at this time is determined by the setting of **Pr.45 Second deceleration time**. When **Pr.45** = "9999", the deceleration speed is the same as **Pr.44** setting. Turning OFF the RM signal will stop decreasing the set frequency and runs the motor at the frequency at that time.
- When **Pr.59** = any of "11, 12, or 13", deceleration can be performed to a frequency equal to or lower than the main speed (External operation mode frequency except multi-speed or PU operation mode frequency).

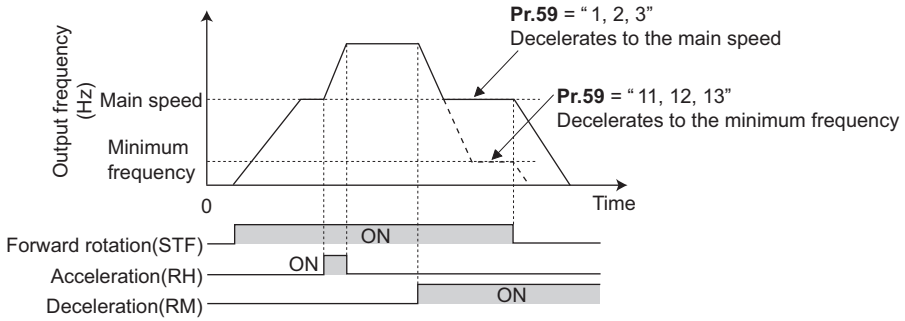

NOTE

- While the RT signal is OFF, **Pr.44 Second acceleration/deceleration time** and **Pr.45 Second deceleration time** are used as the set frequency accelerating/decelerating time at turn ON of the acceleration/deceleration signal. If the **Pr.7** and **Pr.8** settings are longer, the acceleration/deceleration time set by **Pr.7** and **Pr.8** are applied.
  While the RT signal is ON, **Pr.44** and **Pr.45** settings are used as the acceleration/deceleration time regardless of the **Pr.7** and **Pr.8** settings.

◆Output frequency

- During External operation, the remotely-set frequency set with RH and RM signals is added to the terminal 4 input and External operation mode frequency (PU operation mode frequency when **Pr.79** = "3" (External and PU combined operation)) except multi-speed setting. (When compensating analog input, set **Pr.28 Multi-speed input compensation selection** = "1". If the RH and RM signals are used for acceleration/deceleration while the frequency is set by analog voltage input (terminal 2 or 4, selected by **Pr.28** = "0"), the auxiliary input via the terminal 1 is disabled.)
- During PU operation, the remotely-set frequency set with RH and RM signal operation is added to the PU running frequency.

◆Frequency setting storage

- When **Pr.59** = "1, 11", the remotely-set frequency (frequency set by RH/RM operation) is stored to the memory (EEPROM). When power is switched OFF once, then ON, operation is resumed with the stored set frequency.
- When **Pr.59** = "2, 3, 12, 13", the set frequency is not stored, so when switching the power ON again after being switched OFF, the remotely-set frequency becomes 0 Hz.
- The remotely-set frequency is stored at the point when the start signal (STF or STR) turns OFF. Remotely-set frequency is stored every minute after turning OFF (ON) the RH and RM signals together. Each minute, the frequency is overwritten in the EEPROM if the latest frequency is different from the previous one when comparing the two. This cannot be written with RL signals.

NOTE

- When switching the start signal from ON to OFF, or changing frequency by the RH or RM signal frequently, set the frequency setting value storage function (write to EEPROM) invalid (**Pr.59** = "2, 3, 12, 13"). If the frequency setting value storage function is valid (**Pr.59** = "1, 11"), the frequency is written to EEPROM frequently, and this will shorten the life of the EEPROM.

◆Clearing the settings

- When **Pr.59** = "1, 2, 11, 12" and the clear signal (RL) is turned ON, the remotely-set frequency is cleared. When **Pr.59** = "3, 13" and the STF (STR) signal is turned OFF, the remotely-set frequency is cleared.

(F) Setting of acceleration/deceleration time and acceleration/deceleration pattern

NOTE

- The range of frequency changeable by acceleration signal (RH) and deceleration signal (RM) is 0 to maximum frequency (**Pr.1** or **Pr.18** setting). Note that the maximum value of set frequency is (main speed + maximum frequency).

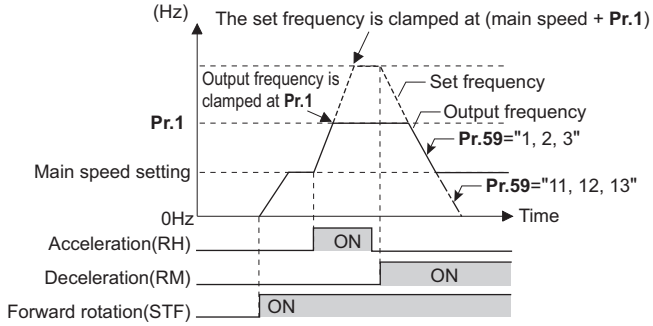

- Even if the start signal (STF or STR) is OFF, turning ON the RH or RM signal varies the preset frequency.
- The RH, RM, or RL signal can be assigned to an input terminal by setting **Pr.178 to Pr.189 (input terminal function selection)**.
  Changing the terminal assignment may affect other functions. Set parameters after confirming the function of each terminal.
- The inverter can be used in the Network operation mode.
- The remote setting function is invalid during JOG operation and PID control operation.
- The multi-speed operation function is invalid when remote setting function is selected.

Setting frequency is "0".

- Even when the remotely-set frequency is cleared by turning ON the RL (clear) signal after turning OFF (ON) both the RH and RM signals, the inverter operates at the remotely-set frequency stored in the last operation if power is reapplied before one minute has elapsed since turning OFF (ON) both the RH and RM signals.

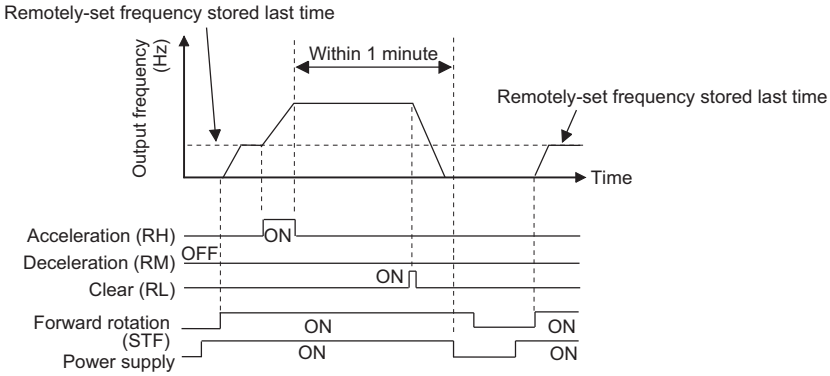

- When the remotely-set frequency is cleared by turning ON the RL (clear) signal after turning OFF (ON) both the RH and RM signals, the inverter operates at the frequency in the remotely-set frequency cleared state if power is reapplied before one minute has elapsed since turning OFF (ON) both the RH and RM signals.

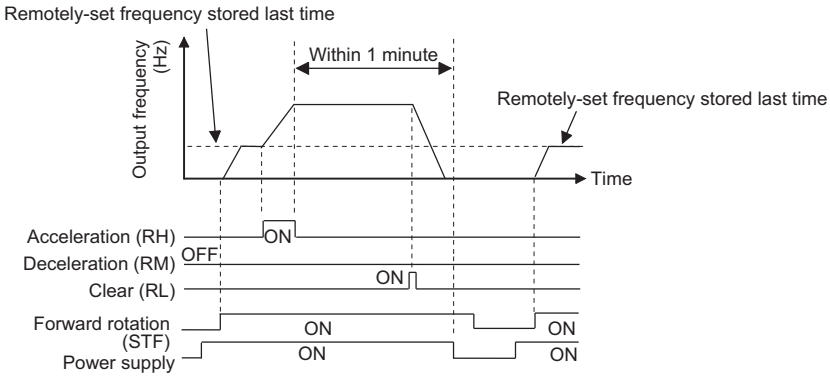

Caution

- **When using the remote setting function, set the maximum frequency again according to the machine.**

Parameters referred to

Pr.1 Maximum frequency, Pr.18 High speed maximum frequency page 245
Pr.7 Acceleration time, Pr.8 Deceleration time, Pr.44 Second acceleration/deceleration time, Pr.45 Second deceleration time page 187
Pr.28 Multi-speed input compensation selection page 222
Pr.178 to Pr.182 (input terminal function selection) page 329

5.5.4 Starting frequency and start-time hold function

V/F Magnetic flux

It is possible to set the starting frequency and hold the set starting frequency for a certain period of time.
Set these functions when a starting torque is needed or the motor drive at start needs smoothing.

Pr.	Name	Initial value	Setting range	Description
13 **F102**	**Starting frequency**	0.5 Hz	0 to 60 Hz	Set the starting frequency at which the start signal is turned ON.
571 **F103**	**Holding time at a start**	9999	0 to 10 s	Set the holding time of **Pr.13**.
			9999	The holding function at a start is invalid.

◆Starting frequency setting (Pr.13)

- The frequency at start can be set in the range of 0 to 60 Hz.
- Set the starting frequency at which the start signal is turned ON.

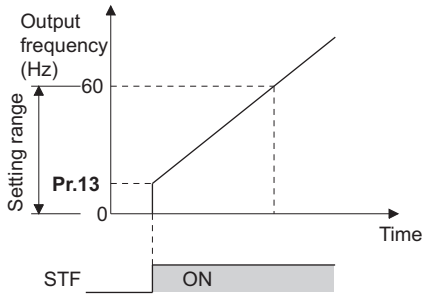

NOTE

- The inverter does not start if the frequency setting signal is less than the value set in **Pr.13**.
  For example, while **Pr.13** = 5 Hz, the inverter output starts when the frequency setting signal reaches 5 Hz.

◆Start-time hold function (Pr.571)

- This function holds during the period set in **Pr.571** and the output frequency set in **Pr.13 Starting frequency**.
- This function performs initial excitation to smooth the motor drive at a start.

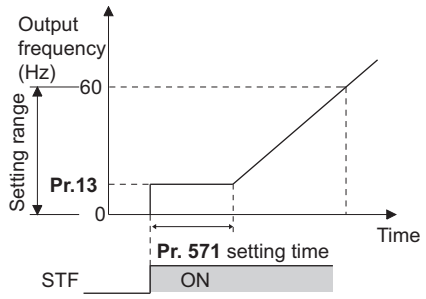

NOTE

- When **Pr.13** ="0 Hz", the starting frequency is held at 0.01 Hz.
- When the start signal was turned OFF during start-time hold, deceleration is started at that point.
- At switching between forward rotation and reverse rotation, the starting frequency is valid but the start-time hold function is invalid.

Caution

- **Note that when Pr.13 is set to any value equal to or lower than Pr.2 Minimum frequency, simply turning ON the start signal will run the motor at the preset frequency even if the command frequency is not input.**

Parameters referred to

Pr.2 Minimum frequency page 245

5.5.5 Minimum motor speed frequency PM

Set the frequency where the PM motor starts running. Set the deadband in the low-speed range to eliminate noise and offset deviation when setting a frequency with analog input.

Pr.	Name	Initial value	Setting range	Description
13 F102	**Starting frequency**	Minimum frequency/ Minimum rotations per minute	0 to 60 Hz	Set the frequency where the motor starts running.

◆Starting frequency setting (Pr.13)

- The frequency where the PM motor starts running can be set in the range of 0 to 60 Hz.
- While the frequency command is less than the **Pr.13 Starting frequency** setting, the PM motor is stopped.
  When the frequency command reaches the set frequency or higher, the PM motor accelerates according to the **Pr.7 Acceleration time** setting.

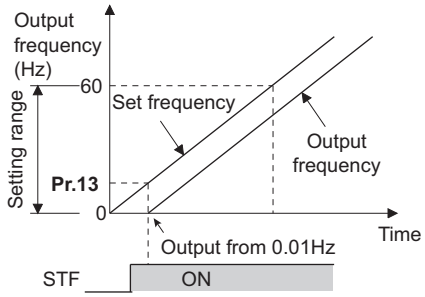

NOTE

- Under induction motor control (under V/F control and Advanced magnetic flux vector control), the output starts at the frequency set in **Pr.13**. Under PM motor control, the output always starts at 0.01 Hz.
- The inverter output does not start when the frequency-setting signal is less than **Pr.13**. For example, while **Pr.13** = "20 Hz", the inverter output starts when the frequency setting signal reaches 20 Hz.

Caution

- **Note that when Pr.13 is set to any value equal to or lower than Pr.2 Minimum frequency, simply turning ON the start signal will run the motor at the preset frequency even if the command frequency is not input.**

Parameters referred to

Pr.2 Minimum frequency page 245
Pr.7 Acceleration time page 187

5.6 (D) Operation command and frequency command

Purpose	Parameter to set			Refer to page
To select the operation mode	Operation mode selection	P.D000	Pr.79	200
To start up in Network operation mode at power-ON	Communication startup mode selection	P.D000, P.D001	Pr.79, Pr.340	209
To select the command source during communication operation	Operation and speed command sources during communication operation, command source selection	P.D010 to P.D013	Pr.338, Pr.339, Pr.550, Pr.551	210
To prevent motor from rotating reversely	Reverse rotation prevention selection	P.D020	Pr.78	217
To set the frequency by pulse train input	Pulse train input	P.D100, P.D101, P.D110, P.D111	Pr.291, Pr.384 to Pr.386	218
To perform JOG operation	JOG operation	P.D200, P.F002	Pr.15, Pr.16	221
To control frequency with combinations of terminals	Multi-speed operation	P.D300 to P.D315	Pr.28, Pr.4 to Pr.6, Pr.24 to Pr.27, Pr.232 to Pr.239	222

5.6.1 Operation mode selection

Select the operation mode of the inverter.
The mode can be changed among operations using external signals (External operation), operation by operation panel or the parameter unit (PU operation), combined operation of PU operation and External operation (External/PU combined operation), and Network operation (when RS-485 terminals or communication option is used).

Pr.	Name	Initial value	Setting range	Description
79 **D000**	**Operation mode selection**	0	0 to 4, 6, 7	Selects the operation mode.

The following table lists valid and invalid commands in each operation mode.

Pr.79 setting	Description			LED display :OFF :ON	Refer to page
0 (initial value)	Use the External/PU switchover mode (PU/EXT) to switch between the PU and External operation mode. At power ON, the inverter is in the External operation mode.			PU operation mode External operation mode NET operation mode 	204
	Operation mode	**Frequency command**	**Start command**		
1	PU operation mode fixed	Operation panel or parameter unit.	FWD or REV on operation panel or parameter unit	PU operation mode 	204
2	External operation mode fixed. The operation can be performed by switching between the External and NET operation modes.	External signal input (terminal 2 and 4, JOG, multi-speed selection, etc.)	External signal input (terminal STF, STR)	External operation mode NET operation mode 	204
3	External/PU combined operation mode 1	Operation panel/ parameter unit or external signal input (multi-speed setting, terminal 4) ∗1	External signal input (terminal STF, STR)	External/PU combined operation mode 	205
4	External/PU combined operation mode 2	External signal input (terminal 2 and 4, JOG, multi-speed selection, etc.)	FWD or REV on operation panel or parameter unit		205
6	Switchover mode Switching of PU, External, and NET operation modes can be performed during operation.			PU operation mode External operation mode NET operation mode 	205
7	External operation mode (PU operation interlock) X12 signal ON: Switchover to PU operation mode enabled (during External operation, output shutoff) X12 signal OFF: Switchover to PU operation mode disabled				206

∗1 The priority of frequency commands when **Pr.79** = "3" is "multi-speed operation (RL/RM/RH/REX) > PID control (X14) > terminal 4 analog input (AU) > digital input by operation panel".

◆Operation mode basics

- The operation mode specifies the source of the start command and the frequency command for the inverter.
- Basically, there are following operation modes.

  External operation mode: For inputting a start command and a frequency command with an external potentiometer and switches which are connected to the control circuit terminal.

  PU operation mode: For inputting a start command and a frequency command with the operation panel (FR-DU08), parameter unit, or the RS-485 communication via PU connector.

  Network operation mode (NET operation mode): For inputting a start command and a frequency command using the RS-485 terminals or communication option.
- The operation mode can be selected from the operation panel or with the communication instruction code.

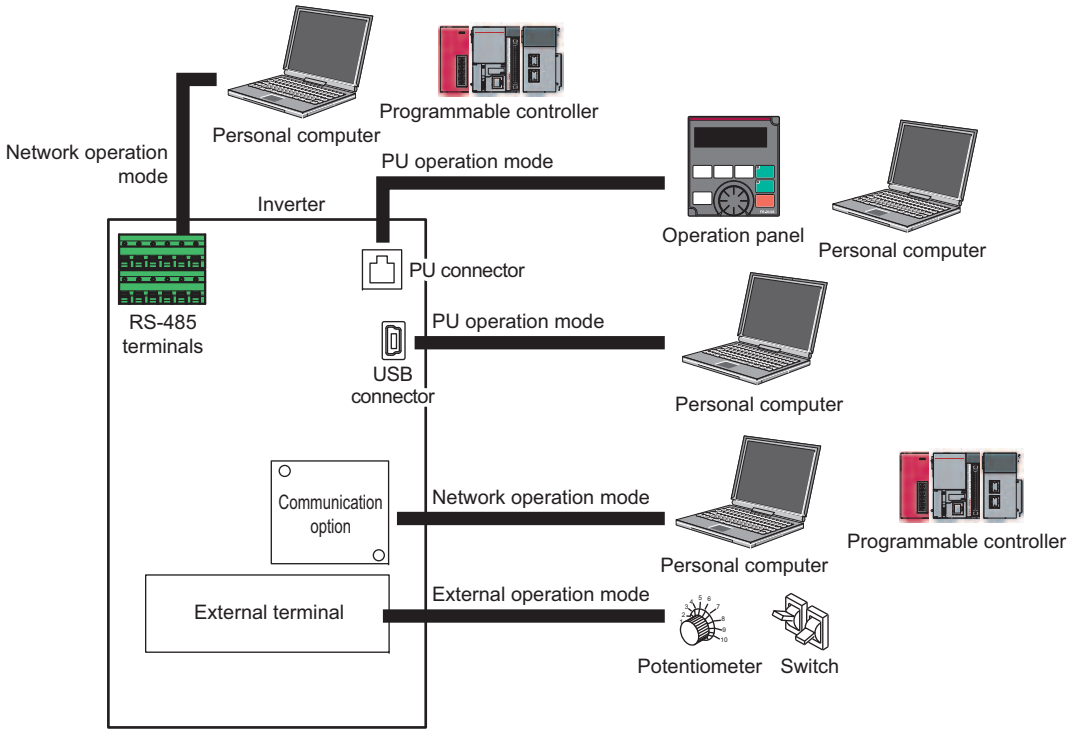

NOTE

- There are two settings of "3" and "4" with PU/External combined operation. The startup method differs according to the setting value.
- In the initial setting, the stop function (PU stop selection) by the operation panel or the parameter unit STOP RESET is effective in modes other than the PU operation mode. (Refer to **Pr.75 Reset selection/disconnected PU detection/PU stop selectionon** page 162.)

◆Operation mode switching method

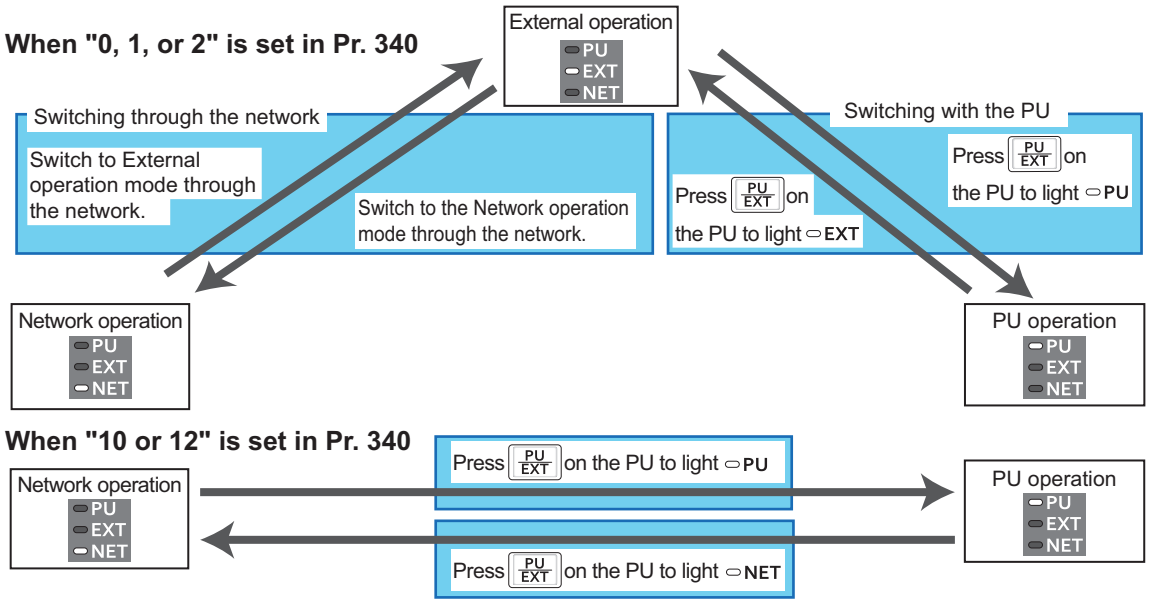

NOTE

- For details on switching by external terminals, refer to the following pages.
  - **PU operation external interlock signal (X12)** ☞ page 206
  - **PU-External operation switchover signal (X16)** ☞ page 207
  - **External-NET operation switchover signal (X65), NET-PU operation switchover signal (X66)** ☞ page 207
  - **Pr.340 Communication startup mode selection** ☞ page 209

◆Operation mode selection flow

Referring to the following table, select the basic parameter settings or terminal wiring related to the operation mode.

Start command input method	Frequency setting method	Terminal wiring	Parameter setting	Operation method
External signal input (terminal STF, STR)	External (terminal 2 and 4, JOG, multi-speed, etc.)	STF (forward rotation)/STR (reverse rotation) (Refer to page 335.) Terminal 2 and 4 (analog) RL, RM, RH, JOG, etc.	**Pr.79** = "2" (External operation mode fixed)	• Frequency setting Frequency setting terminal ON • Start command STF(STR)-ON
	PU (digital setting)	STF (forward rotation)/STR (reverse rotation) (Refer to page 335.)	**Pr.79** = "3" (External/PU combined operation 1)	• Frequency setting DU digital setting • Start command STF(STR)-ON
	Communication (RS-485 terminals)	STF (forward rotation)/STR (reverse rotation) (Refer to page 335.) RS-485 terminals (Refer to page 443.)	**Pr.338** = "1" **Pr.340** = "1, 2"	• Frequency setting Transmit a frequency command via communication. • Start command STF(STR)-ON
	Communication (communication option)	Terminals for communication option (Refer to the Instruction Manual of the communication option.)	**Pr.338** = "1" **Pr.340** = "1"	• Frequency setting Transmit a frequency command via communication. • Start command STF(STR)-ON
PU (FWD/REV key)	External (terminal 2 and 4, JOG, multi-speed, etc.)	Terminal 2 and 4 (analog) RL, RM, RH, JOG, etc.	**Pr.79** = "4" (External/PU combined operation 2)	• Frequency setting Frequency setting terminal ON • Start command FWD/REV key ON
	PU (digital setting)	—	**Pr.79** = "1" (PU operation mode fixed)	• Frequency setting Digital setting • Start command FWD/REV key ON
	Communication (RS-485 terminals/ communication option)	N/A		
Communication (RS-485 terminals)	External (terminal 2 and 4, JOG, multi-speed, etc.)	RS-485 terminals (Refer to page 443.) Terminal 2 and 4 (analog) RL, RM, RH, JOG, etc.	**Pr.339** = "1" **Pr.340** = "1, 2"	• Frequency setting Frequency setting terminal ON • Start command Transmit a start command via communication
	PU (digital setting)	N/A		
	Communication RS-485 terminals	RS-485 terminals (Refer to page 443.)	**Pr.340** = "1, 2"	• Frequency setting Transmit a frequency command via communication. • Start command Transmit a start command via communication
Communication (Communication option)	External (terminal 2 and 4, JOG, multi-speed, etc.)	Terminals for communication option (Refer to the Instruction Manual of the communication option.) Terminal 2 and 4 (analog) RL, RM, RH, JOG, etc.	**Pr.339** = "1" **Pr.340** = "1"	• Frequency setting Frequency setting terminal ON • Start command Transmit a start command via communication
	PU (digital setting)	N/A		
	Communication (communication option)	Terminals for communication option (Refer to the Instruction Manual of the communication option.)	**Pr.340** = "1"	• Frequency setting Transmit a frequency command via communication. • Start command Transmit a start command via communication

◆External operation mode (Pr.79 = "0" (initial value), "2")

- Select the External operation mode when the start command and the frequency command are applied from a frequency setting potentiometer, start switch, etc. which are provided externally and connected to the control circuit terminals of the inverter.
- Generally, parameter change cannot be performed in the External operation mode. (Some parameters can be changed. Refer to **Pr.77 Parameter write selection** page 169.)
- When **Pr.79** = "0 or 2", the inverter starts up in the External operation mode at power-ON. (When using the Network operation mode, refer to page 209.)
- When parameter changing is seldom necessary, setting "2" fixes the operation mode to the External operation mode. When frequent parameter changing is necessary, setting "0" (initial value) allows the operation mode to be changed easily to the PU operation mode by pressing PU/EXT of the operation panel. After switching to the PU operation mode, always return to the External operation mode.
- The STF and STR signal are used as a start command, and the voltage to terminal 2 and 4, current signal, multi-speed signal, and JOG signal are used as a frequency command.

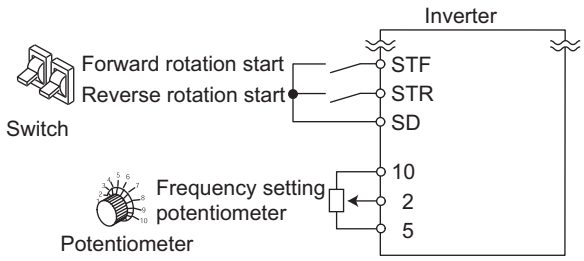

◆PU operation mode (Pr.79 = "1")

- Select the PU operation mode when applying start and frequency commands by only the key operation of the operation panel or the parameter unit. Also select the PU operation mode when making communication using the PU connector.
- When **Pr.79** ="1", the inverter starts up in the PU operation mode at power-ON. The mode cannot be changed to other operation modes.
- The setting dial of the operation panel can be used for setting like a potentiometer. (**Pr.161 Frequency setting/key lock operation selection** page 166)
- When the PU operation mode is selected, the PU operation mode signal (PU) can be output. For the terminal used for the PU signal, set "10 (positive logic)" or "110 (negative logic)" in any of **Pr.190 to Pr.196 (output terminal function selection)** to assign the function.

Operation panel (FR-DU08)

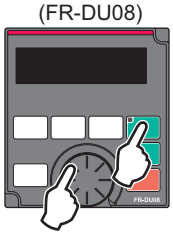

◆PU/External combined operation mode 1 (Pr.79 = "3")

- Select the PU/External combined operation mode 1 when applying a frequency command from the operation panel or the parameter unit and inputting a start command with the external start switches.
- Set "3" in **Pr.79**. The mode cannot be changed to other operation modes.
- When a frequency is input from the external signal by multi-speed setting, it has a higher priority than the frequency command from the PU. Also, when AU is set to "ON", the command signal is output to the terminal 4.

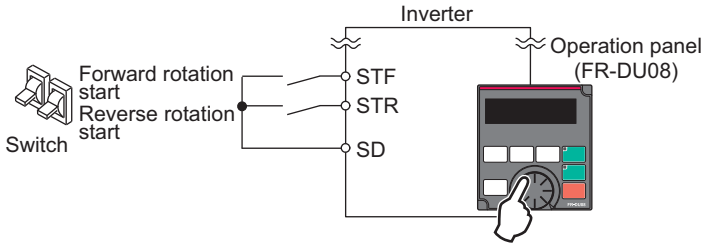

◆PU/External combined operation mode 2 (Pr.79 = "4")

- Select the PU/External combined operation mode 2 when applying a frequency command from the external potentiometer, or multi-speed and JOG signals, and inputting a start command by key operation of the operation panel or the parameter unit.
- Set "4" in **Pr.79**. The mode cannot be changed to other operation modes.

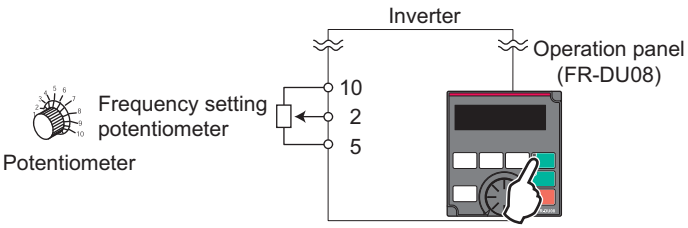

◆Switchover mode (Pr.79 = "6")

- PU, External and Network operation (when RS-485 terminals or communication option is used) can be switched among during operation.

Operation mode switchover	Operation switchover/Operating status
External operation→PU operation	Set to the PU operation mode on the operation panel and the parameter unit. • As the direction of rotation, the direction that was active by External operation is continued. • For the setting frequency, the setting of the potentiometer (frequency command) is continued. (Note, however, that the setting disappears when the power is turned OFF or when the inverter is reset.)
External operation→NET operation	The switchover command to the Network operation mode is transmitted via communication. • As the direction of rotation, the direction that was active by External operation is continued. • The setting by the setting potentiometer (frequency command) is kept. (Note, however, that the setting disappears when the power is turned OFF or when the inverter is reset.)
PU operation→External operation	Press the External operation key on the operation panel and the parameter unit. • The direction of operation is determined by the External operation input signal. • The setting frequency is determined by the external frequency command signal.
PU operation→NET operation	The switchover command to the Network operation mode is transmitted via communication. • For the direction of operation and setting frequency, the status during PU operation is continued.
NET operation→External operation	The switchover command to the External operation mode is transmitted via communication. • The direction of operation is determined by the External operation input signal. • The setting frequency is determined by the external frequency command signal.
NET operation→PU operation	Switch to the PU operation mode on the operation panel and the parameter unit. • For the direction of operation and frequency, the status during Network operation is continued.

◆PU operation interlock (Pr.79 = "7")

- The operation mode can be forcibly switched to the External operation mode by input of the PU operation interlock (X12) signal. This function prevents the operation mode from being accidentally unswitched from the PU operation mode. If the operation mode left unswitched from the PU operation mode, the inverter does not reply to the commands sent through external commands.
- To input the X12 signal, set "12" in any of **Pr.178 to Pr.189 (input terminal function selection)** to assign the function to a terminal. (For details on **Pr.178 to Pr.189**, refer to page 329.)
- Set **Pr.79**="7" (PU operation interlock).
- If the X12 signal is not assigned, the function of the MRS signal is switched to PU operation internal signal from MRS (output stop).

X12 (MRS) signal	Function/Operation	
	Operation mode	Parameter writing*1
ON	Switching of the operation mode (External, PU, and NET) is enabled. Output is stopped during External operation.	Parameter writing enabled
OFF	Operation mode is forcefully changed to the External operation mode. External operation is enabled. Switching to the PU or NET operation mode from the External operation mode is disabled.	Writing of parameters other than **Pr.79** is disabled.

*1 Depends on the **Pr.77 Parameter write selection** setting and the writing conditions of each parameter. (Refer to page 169.)

- Functions/operations by X12 (MRS) signal ON/OFF

Operating status		X12 (MRS) signal	Operation mode	Operating status	Switching to PU or NET operation mode
Operation mode	Status				
PU/NET	during a stop	ON→OFF*1	External*2	If frequency and start commands are input from external source, the inverter runs by those commands.	Not available
	Running	ON→OFF*1			Not available
External	during a stop	OFF→ON	External*2	during a stop	Available
		ON→OFF			Not available
	Running	OFF→ON		Running→Output shutoff	Not available
		ON→OFF		Output shutoff→Running	Not available

*1 The mode is switched to the External operation mode regardless of the ON/OFF state of the start signals (STF, STR). Thus, the motor runs under the External operation mode when the X12 (MRS) signal turns OFF with either of STF or STR in an ON state.

*2 When a fault occurs, the inverter can be reset by pressing STOP RESET on the operation panel.

NOTE

- The operation mode cannot switched to the PU operation mode with the start signal (STF, STR) in an ON state even if the X12 (MRS) signal is ON.
- If the MRS signal is ON and **Pr.79** is written to a value other than "7" when the MRS signal is used as the PU interlock signal during PU operation mode, the MRS signal will act as a regular MRS function (output stop). Also, when **Pr.79**="7", the MRS signal becomes the PU interlock signal.
- The logic of the signal follows the **Pr.17 MRS input selection** setting also when the MRS signal is used as the PU operation interlock signal. When **Pr.17** ="2", ON and OFF in the above explanation are reversed.
- Changing the terminal assignment using **Pr.178 to Pr.189 (input terminal function selection)** may affect the other functions. Set parameters after confirming the function of each terminal.

◆Switching operation mode by external signal (X16 signal)

- When External operation and the operation from the operation panel are used together, the PU operation mode and External operation mode can be switched during a stop (during motor stop, start command OFF) by using the PU-External operation switchover signal (X16).
- When **Pr.79**="0", "6" or "7", switching between the PU operation mode and External operation mode is possible. (When **Pr.79**="6", the switchover can also be made during operation.)
- To input the X16 signal, set "16" in any of **Pr.178 to Pr.189 (input terminal function selection)** to assign the function to a terminal.

Pr.79 setting		X16 signal status and operation mode		REMARKS
		ON (External)	OFF (PU)	
0 (initial value)		External operation mode	PU operation mode	Switching among the External, PU, and NET operation modes is enabled.
1		PU operation mode		PU operation mode fixed
2		External operation mode		External operation mode fixed. (Switching to NET operation mode is enabled.)
3, 4		External/PU combined operation mode		External/PU combined operation mode fixed
6		External operation mode	PU operation mode	Switching among the External, PU, and NET operation mode is enabled while running.
7	X12 (MRS) ON	External operation mode	PU operation mode	Switching among the External, PU, and NET operation mode is enabled. (In the External operation mode, output shutoff.)
	X12 (MRS) OFF	External operation mode		External operation mode fixed. (Forcibly switched to External operation mode.)

NOTE

- The status of the operation mode follows the **Pr.340 Communication startup mode selection** setting and the ON/OFF state of the X65 and X66 signals. (For details, refer to page 207.)
- The priority among **Pr.79 and Pr.340** and signals is **Pr.79** > X12 > X66 > X65 > X16 > **Pr.340**.
- Changing the terminal assignment using **Pr.178 to Pr.189 (input terminal function selection)** may affect the other functions. Set parameters after confirming the function of each terminal.

◆Switching the operation mode by external signals (X65, X66 signals)

- When **Pr.79** ="0, 2 or 6", the PU operation mode and External operation modes can be changed to the Network operation mode during a stop (during motor stop, start command OFF) by the PU/NET operation switchover (X65) signal, the External/NET operation switchover (X66) signal. (When **Pr.79** ="6", switchover is enabled during operation.)
- To switch between the Network operation mode and the PU operation mode
  1) Set **Pr.79** = "0 (initial value) or 6".
  2) Set **Pr.340 Communication startup mode selection**="10 or 12".
  3) Set "65" in any of **Pr.178 to Pr.189** to assign the NET-PU operation switching signal(X65) to a terminal.
  4) When the X65 signal is ON, the PU operation mode is selected. When the X65 signal is OFF, the Network operation mode is selected.

Pr.340 setting	Pr.79 setting		X65 signal state		REMARKS
			ON (PU)	OFF (NET)	
10, 12	0 (initial value)		PU operation mode*1	NET operation mode*2	—
	1		PU operation mode		PU operation mode fixed
	2		NET operation mode		NET operation mode fixed
	3, 4		External/PU combined operation mode		External/PU combined operation mode fixed
	6		PU operation mode*1	NET operation mode*2	Switching between operation modes is enabled while running.
	7	X12 (MRS) ON	Switching between the External operation mode and PU operation mode is enabled.*2		Output is shutoff in the External operation mode.
		X12 (MRS) OFF	External operation mode		The operation mode is forcibly switched to the External operation mode.

*1 When the X66 signal is ON, the NET operation mode is selected.

*2 When the X16 signal is OFF, the PU operation mode is selected. Also, when "0" is set for **Pr.550 NET mode operation command source selection** and the communication option is not connected (communication option is the command source), the PU operation mode is selected.

(D) Operation command and frequency command

- To switch between the Network operation mode and the External operation mode

  1) Set **Pr.79**="0" (initial value) or "2, "6" or "7". (When **Pr.79** ="7" and the X12 (MRS) signal is ON, the operation mode can be switched.)

  2) Set **Pr.340 Communication startup mode selection** ="0" (initial value), "1" or "2".

  3) Set "66" in one of **Pr.178 to Pr.189** to assign the NET-External operation switching signal (X66) to a terminal.

  4) When the X66 signal is ON, Network operation mode is selected. When the X66 signal is OFF, the External operation mode is selected.

Pr.340 setting	Pr.79 setting		X66 signal state		REMARKS
			ON (NET)	OFF (External)	
0 (initial value), 1, 2	0 (initial value)		NET operation mode*1	External operation mode*2	—
	1		PU operation mode		PU operation mode fixed
	2		NET operation mode*1	External operation mode	Switching to PU operation mode is disabled.
	3, 4		External/PU combined operation mode		External/PU combined operation mode fixed
	6		NET operation mode*1	External operation mode*2	Switching between operation modes is enabled while running.
	7	X12 (MRS) ON	NET operation mode*1	External operation mode*2	Output is shutoff in the External operation mode.
		X12 (MRS) OFF	External operation mode		The operation mode is forcibly switched to the External operation mode.

*1 When "**Pr.550 NET mode operation command source selection** = "0" (communication option control source)" and no communication option is connected, the External operation mode is selected.

*2 When the X16 signal is OFF, the PU operation mode is selected. Also, when the X65 signal is assigned, the operation mode follows the ON/OFF state of the X65 signal.

NOTE

- The priority of **Pr.79** and **Pr.340** and signals is **Pr.79** > X12 > X66 > X65 > X16 > **Pr.340**.
- Changing the terminal assignment using **Pr.178 to Pr.189 (input terminal function selection)** may affect the other functions. Set parameters after confirming the function of each terminal.

Parameters referred to

Pr.15 Jog frequency page 221
Pr.4 to Pr.6, Pr.24 to 27, Pr.232 to Pr.239 multi-speed operation page 222
Pr.75 Reset selection/disconnected PU detection/PU stop selection page 162
Pr.161 Frequency setting/key lock operation selection page 166
Pr.178 to Pr.182 (input terminal function selection) page 329
Pr.190 to Pr.196 (output terminal function selection) page 288
Pr.340 Communication startup mode selection page 209
Pr.550 NET mode operation command source selection page 210

5.6.2 Startup in Network operation mode at power-ON

When power is switched ON or when power comes back ON after an instantaneous power failure, the inverter can be started up in the Network operation mode. After the inverter starts up in the Network operation mode, parameter writing and operation can be commanded from programs.
Set this mode when performing communication operation using the RS-485 terminals or a communication option.

Pr.	Name	Initial value	Setting range	Description
79 **D000**	**Operation mode selection**	0	0 to 4, 6, 7	Selects the operation mode. (Refer to page 200.)
340 **D001**	**Communication startup mode selection**	0	0	Follows the **Pr.79** setting.
			1, 2	The inverter starts up in the Network operation mode. If an instantaneous power failure occurs when "2" is set, the operating status before the instantaneous power failure is maintained.
			10, 12	The inverter starts up in the Network operation mode. The operation mode can be changed between the PU operation mode and Network operation mode from the operation panel. If an instantaneous power failure occurs when "12" is set, running is continued at the condition before the instantaneous power failure.

◆Selecting the operation mode for power-ON (Pr.340)

- Depending on the **Pr.79** and **Pr.340** settings, the operation mode at power-ON (reset) changes as described below.

Pr.340 setting	Pr.79 setting	Operation mode at power-ON, at power restoration, or after a reset	Operation mode switching
0 (initial value)	0(initial value)	External operation mode	Switching among the External, PU, and NET operation modes is enabled.*2
	1	PU operation mode	PU operation mode fixed
	2	External operation mode	Switching between the External and NET operation modes is enabled. Switching to PU operation mode is disabled
	3, 4	External/PU combined operation mode	Operation mode switching is disabled
	6	External operation mode	Switching among the External, PU, and NET operation mode is enabled while running.
	7	X12 (MRS) signal ON External operation mode	Switching among the External, PU, and NET operation modes is enabled.*2
		X12 (MRS) signal OFF External operation mode	External operation mode fixed. (Forcibly switched to External operation mode.)
1, 2*1	0	NET operation mode	Same as **Pr.340**="0" setting
	1	PU operation mode	
	2	NET operation mode	
	3, 4	External/PU combined operation mode	
	6	NET operation mode	
	7	X12(MRS) signal ON NET operation mode	
		X12 (MRS) signal OFF External operation mode	
10, 12*1	0	NET operation mode	Switching between the PU and NET operation mode is enabled*3
	1	PU operation mode	Same as **Pr.340**="0" setting
	2	NET operation mode	NET operation mode fixed
	3, 4	External/PU combined operation mode	Same as **Pr.340**="0" setting
	6	NET operation mode	Switching between the PU and NET operation mode is enabled while running.*3
	7	External operation mode	Same as **Pr.340**="0" setting

*1 Use **Pr.340**="2 or 12" setting to perform communication with the RS-485 terminals.
Even if an instantaneous power failure occurs while **Pr.57 Restart coasting time** ≠ "9999" (with automatic restart after instantaneous power failure), inverter continues operation at the condition before the instantaneous failure.

*2 The operation mode cannot be directly changed between the PU operation mode and Network operation mode.

*3 Switching between the PU and NET operation modes is available with the PU/EXT key on the operation panel or the X65 signal.

Parameters referred to

Pr.57 Restart coasting time page 414, page 420
Pr.79 Operation mode selection page 200

5.6.3 Start command source and frequency command source during communication operation

The start and frequency commands from an external device can be made valid when using the RS-485 terminals or the communication option. The command source in the PU operation mode can also be selected.

Pr.	Name	Initial value	Setting range	Description
338 D010	**Communication operation command source**	0	0	Start command source is communication.
			1	Start command source is external.
339 D011	**Communication speed command source**	0	0	Frequency command source is communication.
			1	Frequency command source is external.
			2	Frequency command source is external. (When there is no external input, the frequency command via communication is valid, and the frequency command from terminal 2 is invalid.)
550 D012	**NET mode operation command source selection**	9999	0	The communication option is the command source when in the NET operation mode.
			1	The RS-485 terminals are the command source when in the NET operation mode.
			9999	Communication option is recognized automatically. Normally, the RS-485 terminals are the command source. When the communication option is mounted, the communication option is the command source.
551 D013	**PU mode operation command source selection**	9999	1	The RS-485 terminals are the command source when in the PU operation mode.
			2	The PU connector is the command source when in the PU operation mode.
			3	The USB connector is the command source when in the PU operation mode.
			9999	USB automatic recognition Normally, the PU connector is the command source. When the USB is connected, the USB connector is the command source.

◆Selection of command source in Network operation mode (Pr.550)

- Either of the RS-485 terminals or the communication option can be specified for the command source in the Network operation mode.
- For example, whether or not the communication option is mounted, set **Pr.550** ="1" to write parameters from or input the start and frequency commands via RS-485 terminals in the Network operation mode.

NOTE

- In the initial setting, "9999" (communication option automatic recognition) is set for **Pr.550**. Thus, if the communication option is mounted, parameters cannot be written or the start and frequency commands cannot be sent by communications that use the RS-485 terminals. (Monitoring or parameter reading can be performed.)

◆Selection of the command source of the PU operation mode (Pr.551)

- Any of the PU connector, RS-485 terminals, or USB connector can be specified as the command source in the PU operation mode.
- Set **Pr.551**="1" to use communication connected to the RS-485 terminals to write parameters or execute start and frequency commands in the PU operation mode. Set **Pr.551**="3" or "9999" to use the USB connector.

NOTE

- When **Pr.550** ="1" (NET mode RS-485 terminals) and **Pr.551** ="1" (PU mode RS-485 terminals), the PU operation mode has a precedence. For this reason, if the communication option is not mounted, switching to the Network operation mode is not longer possible.
- Changed setting values are enabled at power-ON or inverter reset.

Pr.550 setting	Pr.551 setting	Command source				REMARKS
		PU connector	USB connector	RS-485 terminals	Communication option	
0	1	×	×	PU operation mode*1	NET operation mode*2	
	2	PU operation mode	×	×	NET operation mode*2	
	3	×	PU operation mode	×	NET operation mode*2	
	9999 (initial value)	PU operation mode*3	PU operation mode*3	×	NET operation mode*2	
1	1	×	×	PU operation mode*1	×	Switching to NET operation mode disabled
	2	PU operation mode	×	NET operation mode	×	
	3	×	PU operation mode	NET operation mode	×	
	9999 (initial value)	PU operation mode*3	PU operation mode*3	NET operation mode	×	
9999 (initial value)	1	×	×	PU operation mode*1	NET operation mode*2	
	2	PU operation mode	×	×	NET operation mode*2	With communication option
				NET operation mode	×	Without communication option
	3	×	PU operation mode	×	NET operation mode*2	With communication option
				NET operation mode	×	Without communication option
	9999 (initial value)	PU operation mode*3	PU operation mode*3	×	NET operation mode*2	With communication option
				NET operation mode	×	Without communication option

*1 The Modbus-RTU protocol cannot be used in the PU operation mode. To use the Modbus-RTU protocol, set **Pr.551**="2".
*2 If the communication option is not mounted, switching to the Network operation mode is not longer possible.
*3 When **Pr.551**= "9999", the priority of the PU command source is USB connector > PU connector.

◆Controllability through communication

Command source	Condition (Pr.551 setting)	Item	Controllability in each operation mode					
			PU operation	External operation	External/ PU combined operation mode 1 (Pr.79 =3)	External/ PU combined operation mode 2 (Pr.79 =4)	NET operation (when RS-485 terminals are used) *6	NET operation (when communication option is used) *7
Control by RS-485 communication via PU connector	2 (PU connector) 9999 (automatic recognition, without USB connection)	Operation (start) command	○	×	×	○	×	
		Operation (stop) command	○	Δ*3	Δ*3	○	Δ*3	
		Running frequency	○	×	○	×	×	
		Monitor	○	○	○	○	○	
		Parameter writing	○*4	×*5	○*4	○*4	×*5	
		Parameter read	○	○	○	○	○	
		Inverter reset	○	○	○	○	○	
	Other than the above	Operation (start) command	×	×	×	×	×	
		Operation (stop) command	Δ*3	Δ*3	Δ*3	Δ*3	Δ*3	
		Running frequency	×	×	×	×	×	
		Monitor	○	○	○	○	○	
		Parameter writing	×*5	×*5	×*5	×*5	×*5	
		Parameter read	○	○	○	○	○	
		Inverter reset	○	○	○	○	○	
Control by communication via RS-485 terminals	1 (RS-485 terminals)	Operation command (start, stop)	○	×	×	○	×	
		Running frequency	○	×	○	×	×	
		Monitor	○	○	○	○	○	
		Parameter writing	○*4	×*5	○*4	○*4	×*5	
		Parameter read	○	○	○	○	○	
		Inverter reset	○	○	○	○	○	
	Other than the above	Operation command (start, stop)	×	×	×	×	○*1	×
		Running frequency	×	×	×	×	○*1	×
		Monitor	○	○	○	○	○	○
		Parameter writing	×*5	×*5	×*5	×*5	○*4	×*5
		Parameter read	○	○	○	○	○	○
		Inverter reset	×	×	×	×	○*2	×

Command source	Condition (Pr.551 setting)	Item	Controllability in each operation mode					
			PU operation	External operation	External/ PU combined operation mode 1 (Pr.79 =3)	External/ PU combined operation mode 2 (Pr.79 =4)	NET operation (when RS-485 terminals are used) *6	NET operation (when communication option is used) *7
Control via USB connector	3 (USB connector) 9999 (automatic recognition, with USB connection)	Operation command (start, stop)	○	×	×	○	×	
		Running frequency	○	×	○	×	×	
		Monitor	○	○	○	○	○	
		Parameter writing	○*4	×*5	×*5	×*5	×*5	
		Parameter read	○	○	○	○	○	
		Inverter reset	○	○	○	○	○	
	Other than the above	Operation command (start, stop)	×	×	×	×	×	
		Running frequency	×	×	×	×	×	
		Monitor	○	○	○	○	○	
		Parameter writing	×*5	×*5	×*5	×*5	×*5	
		Parameter read	○	○	○	○	○	
		Inverter reset	○	○	○	○	○	
Communication option (via communication)	—	Operation command (start, stop)	×	×	×	×	×	○*1
		Running frequency	×	×	×	×	×	○*1
		Monitor	○	○	○	○	○	○
		Parameter writing	×*5	×*5	×*5	×*5	×*5	○*4
		Parameter read	○	○	○	○	○	○
		Inverter reset	×	×	×	×	×	○*2
External terminal at the control circuit	—	Inverter reset	○	○	○	○	○	
		Operation command (start, stop)	×	○	○	×	×*1	
		Frequency setting	×	○	×	○	×*1	

○: Valid ×: Invalid △: Partially valid

*1 Follows the **Pr.338 Communication operation command source** and **Pr.339 Communication speed command source** settings. (Refer to page 210.)

*2 At occurrence of RS-485 communication error, the inverter cannot be reset from the computer.

*3 PU stop is only enabled. PS is displayed on the operation panel during PU stop. Follows the **Pr.75 Reset selection/disconnected PU detection/PU stop selection** setting. (Refer to page 162.)

*4 Writing of some parameters may be disabled by the **Pr.77 Parameter write selection** setting and the operating condition. (Refer to page 169.)

*5 Some parameters are write-enabled independently of the operation mode and command source presence/absence. Writing is also enabled when **Pr.77**="2". (Refer to page 169.) Parameter clear is disabled.

*6 When **Pr.550 NET mode operation command source selection**="1" (RS-485 terminals enabled), or **Pr.550 NET mode operation command source selection**="9999" with no communication option connected.

*7 When **Pr.550 NET mode operation command source selection**="0" (communication option enabled), or **Pr.550 NET mode operation command source selection**="9999" with communication option connected.

◆Operation at fault

Fault record	Conditions (Pr.551 setting)	Operation in each operation mode at error occurrences					
		PU operation	External operation	External/PU combined operation mode 1 (Pr.79 =3)	External/PU combined operation mode 2 (Pr.79 =4)	NET operation (when RS-485 terminals are used)*5	NET operation (when communication option is used)*6
Inverter fault	—	Stop					
PU connector disconnection	2 (PU connector) 9999 (automatic recognition)	Stop/continued *1*4					
	Other than 2	Stop/continued *1					
Communication error at PU connector	2 (PU connector)	Stop/continued *2	Continued		Stop/ continued *2	Continued	
	Other than 2	Continued					
Communication error at RS-485 terminals	1 (RS-485 terminals)	Stop/continued *2	Continued		Stop/ continued *2	Continued	
	Other than 1	Continued				Stop/continued *2	Continued
Communication error at USB connector	3 (USB connector) 9999 (automatic recognition)	Stop/continued *2	Continued				
	Other than 3	Continued					
Communication error at communication option	—	Continued					Stop/continued *3

*1 Selectable with **Pr.75 Reset selection/disconnected PU detection/PU stop selection**

*2 Selectable with **Pr.122 PU communication check time interval, Pr.336 RS-485 communication check time interval,** and **Pr.548 USB communication check time interval**

*3 Follows the communication option

*4 In the PU JOG operation mode, operation always stops when the PU is disconnected. The operation of PU disconnection (E.PUE) follows the **Pr.75 Reset selection/disconnected PU detection/PU stop selection** setting.

*5 When **Pr.550 NET mode operation command source selection**= "1" (RS-485 terminals enabled), or **Pr.550 NET mode operation command source selection**="9999" with no communication option connected.

*6 When **Pr.550 NET mode operation command source selection**="0" (communication option enabled), or **Pr.550 NET mode operation command source selection**="9999" with communication option connected.

◆Selection of control source in Network operation mode (Pr.338, Pr.339)

- There are two control sources: the start command source, which controls the signals related to the inverter stand command and function selection, and the speed command source, which controls signals related to frequency setting.
- The table below shows the commands from the external terminals and communication (RS-485 terminals or communication option) in the Network operation mode.

Operation location selection			Pr.338 Communication operation command source		0: NET			1: EXT			REMARKS
			Pr.339 Communication speed command source		0: NET	1: EXT	2: EXT	0: NET	1: EXT	2: EXT	
Fixed function (terminal-equivalent function)			Running frequency from communication		NET	—	NET	NET	—	NET	
			Terminal 2		—	External	—	—	—	—	
			Terminal 4		—	External		—	External		
			Terminal 1		Compensation						
Selectable function	Pr.178 to Pr.189 setting	0	RL	Low-speed operation command/remote setting Clear/Stop-on-contact selection 0	NET	External		NET	External		**Pr.59** ="0" (multi-speed) **Pr.59** ≠"0" (remote) **Pr.270** ="1, 3, 11, or 13" (stop-on-contact)
		1	RM	Middle-speed operation command/remote setting deceleration	NET	External		NET	External		
		2	RH	High-speed operation command/remote setting acceleration	NET	External		NET	External		
		3	RT	Second function selection/ stop-on-contact selection 1	NET			External			**Pr.270** ="1, 3, 11, or 13" (stop-on-contact)
		4	AU	Terminal 4 input selection	—	Combined		—	Combined		
		5	JOG	Jog operation selection	—			External			
		6	CS	No function	External						
		7	OH	External thermal relay input	External						
		8	REX	15-speed selection	NET	External		NET	External		**Pr.59** ="0" (multi-speed)
		10	X10	Inverter run enable signal	External						
		11	X11	FR-HC2/FR-CC2 connection, instantaneous power failure detection	External						
		12	X12	PU operation external interlock	External						
		13	X13	External DC injection brake operation start	NET			External			
		14	X14	PID control valid terminal	NET	External		NET	External		
		16	X16	PU/External operation switchover	External						
		18	X18	V/F switchover	NET			External			
		24	MRS	Output stop	Combined			External			**Pr.79** ≠ "7"
				PU operation interlock	External						**Pr.79** = "7" When X12 signal is not assigned.
		25	STP (STOP)	Start self-holding selection	-			External			
		28	X28	Start-time tuning start external input	NET			External			
		37	X37	Traverse function selection	NET			External			
		38	PDI1	PID multistage set point setting 1	NET	External		NET	External		
		39	PDI2	PID multistage set point setting 2	NET	External		NET	External		
		40	PDI3	PID multistage set point setting 3	NET	External		NET	External		
		46	TRG	Trace trigger input	NET			External			
		47	TRC	Trace sampling start/end	NET			External			
		48	X48	Power failure stop external	External						

(D) Operation command and frequency command

Operation location selection			Pr.338 Communication operation command source / Pr.339 Communication speed command source		0: NET			1: EXT			REMARKS
					0: NET	1: EXT	2: EXT	0: NET	1: EXT	2: EXT	
Selectable function	Pr.178 to Pr.189 setting	50	SQ	Sequence start	External, NET			External			**Pr.414**="1": Valid when there is external or network input **Pr.414**="2": External
		51	X51	Fault clear	Combined			External			
		60	STF	Forward rotation command	NET			External			
		61	STR	Reverse rotation command	NET			External			
		62	RES	Inverter reset	External						
		64	X64	PID forward/reverse action switchover	NET	External		NET	External		
		65	X65	PU/NET operation switchover	External						
		66	X66	External/NET operation switchover	External						
		67	X67	Command source switchover	External						
		70	X70	DC feeding operation permission	NET			External			
		71	X71	DC feeding cancel	NET			External			
		72	X72	PID integral value reset	NET	External		NET	External		
		73	X73	Second PID P control switchover	NET	External		NET	External		
		77	X77	Pre-charge end command	NET	External		NET	External		
		78	X78	Second pre-charge end command	NET	External		NET	External		
		79	X79	Second PID forward/reverse action switchover	NET	External		NET	External		
		80	X80	Second PID control valid terminal	NET	External		NET	External		
		81	PGT	PID gain tuning start/forced end	NET	External		NET	External		
		84	X84	Emergency drive execution command	Combined						
		94	X94	Control signal input for main circuit power supply MC	External						
		95	X95	Converter unit fault input	External						
		96	X96	Converter unit fault input (E.CPU, E.OUT)	External						
		97	X97	Cleaning valid	NET			External			
		98	X98	Cleaning trigger	NET			External			

[Explanation of terms in table]

External (EXT) : Commands from external terminal are only valid.
NET : Commands via communication are only valid.
Combined : Command from both external terminal and communication is valid.
— : Command from either of external terminal and communication is invalid.
Compensation : Commands are valid only from external terminal signals when **Pr.28 Multi-speed input compensation selection** ="1".

NOTE

- The command source of communication follows the **Pr.550** and **Pr.551** settings.
- The **Pr.338** and **Pr.339** settings can be changed while the inverter is running when **Pr.77** = "2". Note that the setting change is applied after the inverter has stopped. Until the inverter has stopped, communication operation command source and communication speed command source before the setting change are valid.

◆Command source switchover via external terminals (X67)

- In the Network operation mode, the start command source and speed command source can be switched over by the command source switchover signal (X67). This can be used to control signal inputs from both the external terminals and via communication.
- For the X67 signal, set "67" to any of **Pr.178 to Pr.189 (input terminal function selection)** to assign the function to a control terminal.
- When the X67 signal is OFF, the start command source and speed command source are given via control terminals.

X67 signal state	Start command source	Speed command source
Signal not assigned	According to **Pr.338**	According to **Pr.339**
ON		
OFF	Commands from external terminals are only valid.	

NOTE

- The ON/OFF state of the X67 signal is applied only during a stop. When the terminals are switched during operation, the ON/OFF state is applied after a stop.
- When the X67 is OFF, a reset via communication is disabled.
- Changing the terminal assignment using **Pr.178 to Pr.189 (input terminal function selection)** may affect the other functions. Set parameters after confirming the function of each terminal.

Parameters referred to

Pr.28 Multi-speed input compensation selection page 222
Pr.59 Remote function selection page 194
Pr.79 Operation mode selection page 200

5.6.4 Reverse rotation prevention selection

This function can prevent reverse rotation fault resulting from the incorrect input of the start signal.

Pr.	Name	Initial value	Setting range	Description
78 **D020**	**Reverse rotation prevention selection**	0	0	Both forward and reverse rotations allowed
			1	Reverse rotation disabled
			2	Forward rotation disabled

- Set this parameter to limit the motor rotation to only one direction.
- This parameter is valid for all of the reverse rotation and forward rotation keys of the operation panel and of the parameter unit, the start signals (STF, STR signals) via external terminals, and the forward and reverse rotation commands through communication.

5.6.5 Frequency setting via pulse train input

A pulse train input to the terminal JOG can be used to set the inverter's speed command.
Moreover, speed synchronized operation of an inverter can be performed by using the pulse train output together with the terminal JOG.

Pr.	Name	Initial value		Setting range	Description	
		FM	CA		Pulse train input (terminal JOG)	Pulse train output (terminal FM)
291 D100	Pulse train I/O selection	0		0	JOG signal*1	FM output*2
				1	Pulse train input	FM output*2
				10*2	JOG signal*1	High-speed pulse train output (50% duty)
				11*2	Pulse train input	High-speed pulse train output (50% duty)
				20*2	JOG signal*1	High-speed pulse train output (ON width is fixed)
				21*2	Pulse train input	High-speed pulse train output (ON width is fixed)
				100*2	Pulse train input	High-speed pulse train output (ON width is fixed) Output of pulse train input as is
384 D101	Input pulse division scaling factor	0		0	Pulse train input disabled	
				1 to 250	Division ratio on the input pulse. The frequency resolution on the input pulse changes according to this setting.	
385 D110	Frequency for zero input pulse	0 Hz		0 to 590 Hz	Sets the frequency when the input pulse is zero (bias).	
386 D101	Frequency for maximum input pulse	60 Hz	50 Hz	0 to 590 Hz	Sets the frequency when the input pulse is maximum (gain).	

*1 Function assigned to **Pr.185 JOG terminal function selection**.
*2 Valid only for the FM type inverters.

◆Selection of pulse train input(Pr.291)

- Setting **Pr.291 Pulse train I/O selection** = "1, 11, 21, 100" and **Pr.384 Input pulse division scaling factor** ≠ "0" changes the function of terminal JOG to a pulse train input so that the frequency can be set to the inverter. In the initial setting, the JOG signal is assigned to terminal JOG. A maximum pulse train of 100k pulses/s can be input.
- Connection with an open collector output system pulse generator

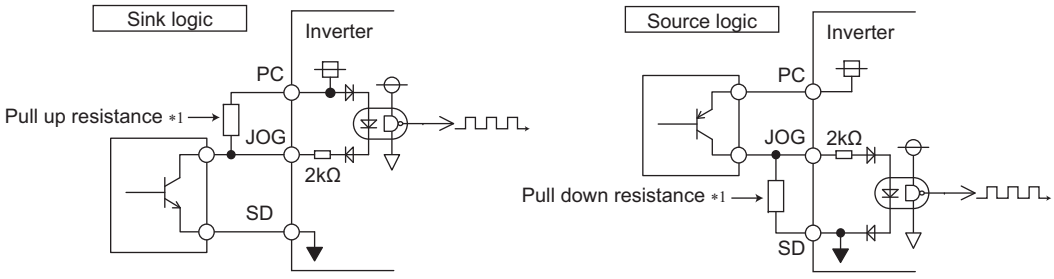

*1 When the wiring length is long with open collector outputs, the influence of stray capacitance causes the pulse to flatten out and prevents the input pulse from being recognized.
When the wiring length is long (10 m or longer of shielded twisted pair cable with a recommended cable gauge of 0.75 mm^2), connect the open collector output signal to the power supply by an external pull-up resistance. The table below shows the reference resistance values for wiring length. The stray capacitance of the wiring changes considerably according to how the cable is laid, thus the above wiring lengths are not guaranteed values. When using a pull-up/down resistance, check the permissible load of the resistor and the permissible load current of the output transistor, and use within the permissible range.

Wiring length	Less than 10 m	10 to 50 m	50 to 100 m
Pull-up/down resistance	Not required	1 kΩ	470 Ω
Load current (reference)	10 mA	35 mA	65 mA

- Connection with a complementary output system pulse generator

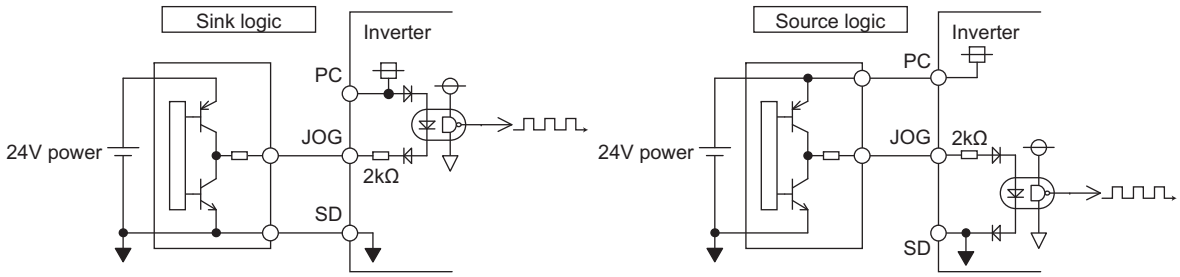

NOTE

- When pulse train input is selected, the function assigned to terminal JOG by **Pr.185 JOG terminal function selection** is invalid.
- **Pr.291** is the selection parameter for pulse train output/FM output. Thus, before changing the setting, check the specifications of the device connected to the terminal FM. (For the pulse train output, refer to page 277.)

◆Pulse train input specification

Item		Specification
Supported pulse method		Open collector output. Complementary output. (24 V power supply voltage)
HIGH input level		20 V or more (voltage between JOG and SD)
LOW input level		5 V or less (voltage between JOG and SD)
Maximum input pulse rate		100 kpps
Minimum input pulse width		2.5 us
Input resistance/load current		2 kΩ (typ)/10 mA (typ)
Maximum wiring length (reference value)	Open collector output method	10 m (0.75 mm^2/twisted pair)
	Complementary output method	100 m (output resistance 50 Ω)*1
Detection resolution		1/3750

*1 The wiring length of complementary output is dependent on the output wiring specification of the complementary output unit. The stray capacitance of the wiring changes considerably according to how the cable is laid, thus the maximum wiring length is not a guaranteed value.

◆Adjustment of pulse train and frequency (Pr.385, Pr.386)

- The frequency during zero input pulse and maximum input pulse can be set with **Pr.385 Frequency for zero input pulse** and **Pr.386 Frequency for maximum input pulse**, respectively.

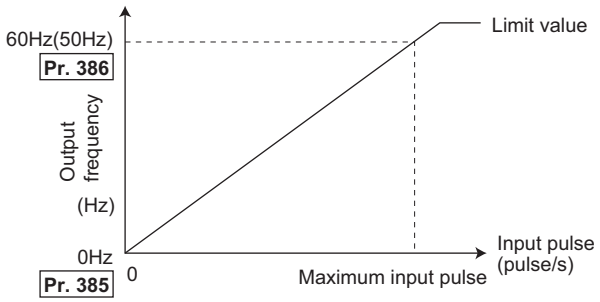

*1 Limit value = (**Pr.386** - **Pr.385**) × 1.1 + **Pr.385**

◆How to calculate the input pulse division scaling factor (Pr.384)

- The maximum number of pulses can be calculated by the following formula with **Pr.384Input pulse division scaling factor**:
  Maximum number of pulses (pulse/s) = **Pr.384** × 400 (maximum 100k pulses/s)
  (number of detectable pulses = 11.45 pulses/s)
- For example, to run the invert at 0 Hz when pulse train input is zero and at 30 Hz when pulse train is 4000 pulses/sec, set the inverter as follows:
  Pr.384 = 10 (maximum number of input pulses 4000 pulses/s)
  Pr.385 = 0 Hz, **Pr.386** = 30 Hz (pulse train limit value 33 Hz)

NOTE

- The priority of the frequency command by the external signals is "Jog operation > multi-speed operation > terminal 4 analog input". When pulse train input is enabled (**Pr.291** = "1, 11, 21, 100" and **Pr.384** ≠ "0"), terminal 2 analog input becomes invalid.

◆Speed synchronized operation by pulse input/output

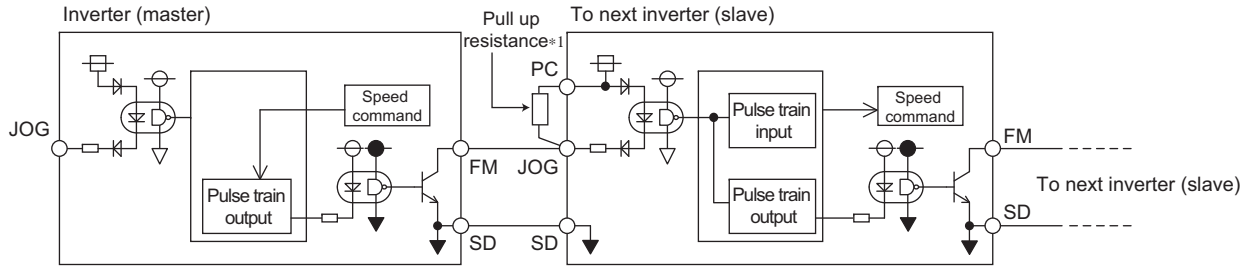

*1 When the wiring length between FM and JOG is long, the influence of stray capacitance causes the pulse to flatten out and prevents the input pulse from being recognized. When the wiring length is long (10 m or longer of shielded twisted pair cable with a recommended cable size of 0.75 mm^2), connect the terminal JOG to the terminal PC by an external pull-up resistance. The table below shows the reference resistance values for wiring length.

Wiring length	Less than 10 m	10 to 50 m	50 to 100 m
Pull-up resistance	Not required	1 kΩ	470 Ω
Load current (reference)	10 mA	35 mA	65 mA

The stray capacitance of the wiring changes considerably according to how the cable is laid, thus the above wiring lengths are not guaranteed values.
When using a pull-up/down resistance, check the permissible load of the resistor and the permissible load current (terminal PC: 100 mA, high-speed pulse train output: 85 mA), and use within the permissible range.

- Setting "100" to **Pr.291** enables out of the pulse train input as it is to the pulse train output (terminal FM). Connecting in a daisy chain enables speed synchronized operation of multiple inverters.
- Set **Pr.384** to "125" for inverters that receive pulse train since the maximum pulse train output is 50k pulses/s.
- The maximum number of input pulses should be 50k pulses/s.
- When performing synchronized operation, wire according to the following procedure. (This is to prevent contact input of 24 V from being applied to the terminal FM.)
  1) Set pulse train output (setting other than "0, 1") to **Pr.291** on the master side inverter.
  2) Turn the inverter power supply OFF.
  3) Wire the slave side terminal JOG-SD to the master side terminal FM-SD.
  4) Turn the inverter power supply ON.

NOTE

- After changing the **Pr.291** setting, connect the JOG terminal to the terminal FM-SD. When FM output (voltage output) is taken as the pulse train, take caution to prevent voltage from being applied to the terminal FM.
- Use the sink logic (factory setting) for the slave side inverter. The inverter does not operate properly with source logic.

◆Speed synchronized operation specification

Item	Specification
Output pulse format	Pulse width fixed (10 μs)
Pulse rate	0 to 50 kpps
Pulse propagation delay	1 to 2 μs/1 unit*1

*1 A pulse transmission delay of about 1 to 2 μs in the slave occurs and further increases when the wiring length is long.

Parameters referred to
Pr.291 (Pulse train output) page 273

5.6.6 JOG operation

The frequency and acceleration/deceleration time for JOG operation can be set. JOG operation is possible in both External operation and PU.
JOG operation can be used for conveyor positioning, test run, etc.

Pr.	Name	Initial value	Setting range	Description
15 **D200**	**Jog frequency**	5 Hz	0 to 590 Hz	Sets the frequency during JOG operation.
16 **F002**	**Jog acceleration/ deceleration time**	0.5 s	0 to 3600 s (360 s*1)	Sets motor acceleration/deceleration time during JOG operation. For the acceleration/deceleration time, set the time until the frequency*2 set to **Pr.20 Acceleration/deceleration reference frequency** is reached. The acceleration/deceleration times cannot be set separately.

The above parameter is displayed as a simple mode parameter when the LCD operation panel (FR-LU08) or the parameter unit (FR-PU07) is mounted. Setting of this parameter is enabled when the operation panel (FR-DU08) is connected and "0" is set to **Pr.160 User group read selection**. (Refer to page 177.)

*1 When **Pr.21 Acceleration/deceleration time increments** = "0" (initial value), the setting range is "0 to 3600 s" and the setting increment is "0.1 s". When **Pr.21** = "1" is set, this means a setting range of "0 to 360 s" and the setting increment is "0.01 s".

*2 The **Pr.20** initial value is set to 60 Hz for the FM type and to 50 Hz for the CA type.

◆JOG operation in the External operation

- Operation can be started and stopped by the start signals (STF and STR signals) when the Jog operation selection (JOG) signal is ON. (For the operation method, refer to page 109.)
- In the initial setting, the JOG signal is assigned to the terminal JOG.

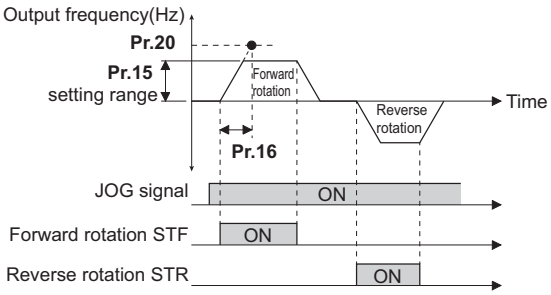

◆JOG operation in PU

- When the operation panel or the parameter unit is in the JOG operation mode, the motor jogs only while the start button is pressed. (For the operation method, refer to page 110.)

NOTE

- The reference frequency of the acceleration/deceleration time differs according to the **Pr.29 Acceleration/deceleration pattern selectionsetting.** (Refer to page 191.)
- The **Pr.15** setting should be equal to or higher than the **Pr.13 Starting frequency** setting.
- The JOG signal can be assigned to an input terminal by setting **Pr.178 to Pr.189 (input terminal function selection)**. Changing the terminal assignment may affect other functions. Set parameters after confirming the function of each terminal.
- During JOG operation, the second acceleration/deceleration cannot be selected with the RT signal. (Other second functions are enabled. (Refer to page 333.))
- When **Pr.79 Operation mode selection**="4", JOG operation is started by one push of FWD / REV on the operation panel and stopped by STOP RESET.
- This function is invalid when **Pr.79=** "3".

Parameters referred to

Pr.13 Starting frequency page 197
Pr.20 Acceleration/deceleration reference frequency, Pr.21 Acceleration/deceleration time increments page 187
Pr.29 Acceleration/deceleration pattern selection page 191
Pr.79 Operation mode selection page 200
Pr.178 to Pr.182 (input terminal function selection) page 329

5.6.7 Operation by multi-speed setting

Use these parameters to change among pre-set operation speeds with the terminals. The speeds are pre-set with parameters.
Any speed can be selected by simply turning ON/OFF the contact signals (RH, RM, RL, and REX signals).

Pr.	Name	Initial value		Setting range	Description
		FM	CA		
28 D300	**Multi-speed input compensation selection**	0		0	Without compensation
				1	With compensation
4 D301	**Multi-speed setting (high speed)**	60 Hz	50 Hz	0 to 590 Hz	Sets the frequency when RH is ON.
5 D302	**Multi-speed setting (middle speed)**	30 Hz		0 to 590 Hz	Sets the frequency when RM is ON.
6 D303	**Multi-speed setting (low speed)**	10 Hz		0 to 590 Hz	Sets the frequency when RL is ON.
24 D304	**Multi-speed setting (speed 4)**	9999		0 to 590 Hz, 9999	Frequency from 4th speed to 15th speed can be set according to the combination of the RH, RM, RL and REX signals. 9999: Not selected
25 D305	**Multi-speed setting (speed 5)**				
26 D306	**Multi-speed setting (speed 6)**				
27 D307	**Multi-speed setting (speed 7)**				
232 D308	**Multi-speed setting (speed 8)**				
233 D309	**Multi-speed setting (speed 9)**				
234 D310	**Multi-speed setting (speed 10)**				
235 D311	**Multi-speed setting (speed 11)**				
236 D312	**Multi-speed setting (speed 12)**				
237 D313	**Multi-speed setting (speed 13)**				
238 D314	**Multi-speed setting (speed 14)**				
239 D315	**Multi-speed setting (speed 15)**				

◆Multi-speed setting (Pr.4 to Pr.6)

- The inverter operates at frequencies set in **Pr.4** when RH signal is ON, **Pr.5** when RM signal is ON and **Pr.6** when RL signal is ON.

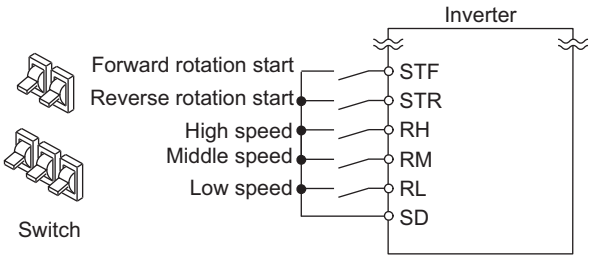

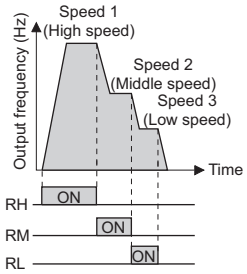

NOTE

- In the initial setting, when two or more of multi-speed settings are simultaneously selected, priority is given to the set frequency of the lower signal.
  For example, when RH and RM signals turn ON, RM signal (**Pr.5**) has a higher priority.
- The RH, RM and RL signals are assigned to the terminals RH, RM and RL in the initial status.
  Set "0 (RL)", "1 (RM)", and "2 (RH)" in any of **Pr.178 to Pr.189 (input terminal function selection)** to assign the signals to other terminals.

◆Multi-speed setting for 4th speed or more (Pr.24 to Pr.27, Pr.232 to Pr.239)

- The frequency from 4th speed to 15th speed can be set by the combination of the RH, RM, RL, and REX signals. Set the running frequencies in **Pr.24 to Pr.27, Pr.232 to Pr.239**. (In the initial status, 4th to 15th speeds are invalid.)
- For the terminal used for REX signal input, set "8" in any of **Pr.178 to Pr.189 (input terminal function selection)** to assign the function.

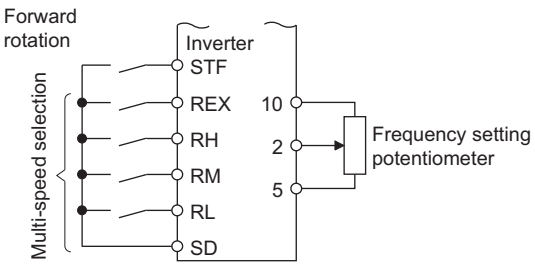

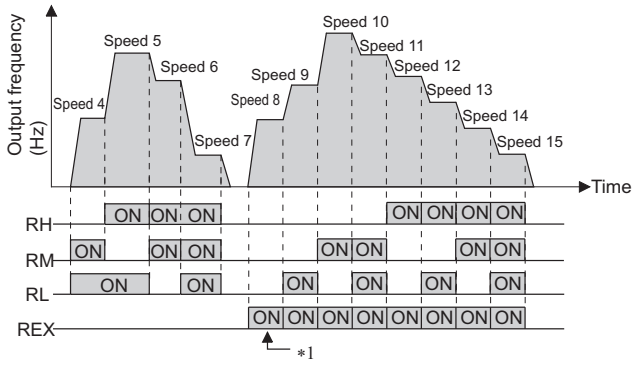

*1 When RH, RM and RL is set to OFF and REX is set to ON when "9999" is set to **Pr.232 Multi-speed setting (speed 8)**, the inverter runs by the frequency set to **Pr.6**.

◆Input compensation of multi-speed setting (Pr.28)

- Speed (frequency) compensation can be applied for the multi-speed setting and the remote setting by inputting the frequency setting compensation signal (terminals 1, 2).

NOTE

- The priority of the frequency commands by the external signals are "Jog operation > multi-speed operation > terminal 4 analog input > pulse train input > terminal 2 analog input". (For details on frequency commands by analog input, refer to page 314.)
- Valid in the External operation mode or PU/External combined operation mode (**Pr.79=** "3" or "4").
- Multi-speed parameters can also be set during PU operation or External operation.
- The **Pr.24 to Pr.27** and **Pr.232 to Pr.239** settings have no priority among them.
- When **Pr.59 Remote function selection** ≠ "0", the multi-speed setting is invalid since the RH, RM, and RL signals are for remote setting.
- When performing analog input compensation, set **Pr.28 Multi-speed input compensation selection** to "1".
- Select the terminals (terminals 1, 2) to use for compensation input voltage (0 to ± 5 V, 0 to ± 10 V) at **Pr.73 Analog input selection**.
- When using terminal 1 for compensation input, set **Pr.868 Terminal 1 function assignment** "0" (initial value).
- Changing the terminal assignment using **Pr.178 to Pr.189 (input terminal function selection)** may affect the other functions. Set parameters after confirming the function of each terminal.

Parameters referred to

Pr.15 Jog frequency page 221
Pr.59 Remote function selection page 194
Pr.73 Analog input selection page 306
Pr.79 Operation mode selection page 200
Pr.178 to Pr.189 (input terminal function selection) page 329
Pr.868 Terminal 1 function assignment page 310

5.7 (H) Protective function parameter

Purpose	Parameter to set			Refer to page
To protect the motor from overheating	Electronic thermal O/L relay	P.H000, P.H006, P.H010, P.H016, P.H020, P.H021	Pr.9, Pr.51, Pr.561, Pr.607, Pr.608, Pr.1016	225
To set the overheat protection characteristics for the motor	Free thermal O/L relay setting	P.H001 to P.H005, P.H011 to P.H015	Pr.600 to Pr.604, Pr.692 to Pr.696	232
To extend the life of the cooling fan	Cooling fan operation selection	P.H100	Pr.244	233
To detect ground fault at start	Ground fault at start enable/disable	P.H101	Pr.249	234
To vary the operating level of the undervoltage protective function	Undervoltage level	P.H102	Pr.598	234
To initiate an inverter protective function	Fault initiation	P.H103	Pr.997	235
To disable the I/O phase loss protective function	I/O phase loss protection selection	P.H200, P.H201	Pr.251, Pr.872	235
To restart using the retry function when the protective function is activated	Retry operation	P.H300 to P.H303	Pr.65, Pr.67 to Pr.69	236
To operate without activating protective functions in case of emergency	Emergency drive	P.H320 to P.H324	Pr.514, Pr.515, Pr.523, Pr.524, Pr.1013	238
To set the upper and lower limits of the output frequency	Maximum/minimum frequency	P.H400 to P.H402	Pr.1, Pr.2, Pr.18	245
To operate by avoiding resonance points	Frequency jump	P.H420 to P.H425, P.H429	Pr.31 to Pr.36, Pr.552	246
To limit the output current so that the inverter protective function does not activate	Stall prevention	P.H500, P.H501, P.H600, P.H601, P.H610, P.H611, P.H620, P.H621, P.H631, P.M430, P.T010, P.T040	Pr.22, Pr.23, Pr.48, Pr.49, Pr.66, Pr.148, Pr.149, Pr.154, Pr.156, Pr.157, Pr.858, Pr.868	248
To monitor for load faults	Load characteristics fault detection	P.H520 to P.H527, P.H530 to P.H534	Pr.1480 to Pr.1492	255
To shut off the output during acceleration	Overspeed detection level	P.H800	Pr.374	259

5.7.1 Motor overheat protection (electronic thermal O/L relay)

Set the current of the electronic thermal O/L relay function to protect the motor from overheating. Such settings will provide the optimum protective characteristic considering the low cooling capability of the motor during low-speed operation.

Pr.	Name	Initial value	Setting range	Description
9 **H000**	**Electronic thermal O/L relay**	Rated inverter current	0 to 500 A*1	Set the rated motor current.
			0 to 3600 A*2	
600 **H001**	**First free thermal reduction frequency 1**	9999	0 to 590 Hz	The electronic thermal O/L relay operation level can be changed to match the motor temperature characteristics with the combination of these three points (**Pr.600, Pr.601**), (**Pr.602, Pr.603**), (**Pr.604, Pr.9**). 9999: Free thermal O/L relay invalid
			9999	
601 **H002**	**First free thermal reduction ratio 1**	100%	1 to 100%	
			9999	
602 **H003**	**First free thermal reduction frequency 2**	9999	0 to 590 Hz	
			9999	
603 **H004**	**First free thermal reduction ratio 2**	100%	1 to 100%	
			9999	
604 **H005**	**First free thermal reduction frequency 3**	9999	0 to 590 Hz	
			9999	
607 **H006**	**Motor permissible load level**	150%	110 to 250%	Set the permissible load according to the motor characteristics.
51 **H010**	**Second electronic thermal O/L relay**	9999	0 to 500 A*1	Enabled when the RT signal is ON. Set the rated motor current.
			0 to 3600 A*2	
			9999	Second electronic thermal O/L relay invalid
692 **H011**	**Second free thermal reduction frequency 1**	9999	0 to 590 Hz	The electronic thermal O/L relay operation level can be changed to match the second motor temperature characteristics with the combination of these three points (**Pr.692, Pr.693**), (**Pr.694, Pr.695**), (**Pr.696, Pr.51**). 9999: Second free thermal O/L relay invalid
			9999	
693 **H012**	**Second free thermal reduction ratio 1**	100%	1 to 100%	
			9999	
694 **H013**	**Second free thermal reduction frequency 2**	9999	0 to 590 Hz	
			9999	
695 **H014**	**Second free thermal reduction ratio 2**	100%	1 to 100%	
			9999	
696 **H015**	**Second free thermal reduction frequency 3**	9999	0 to 590 Hz	
			9999	
608 **H016**	**Second motor permissible load level**	9999	110 to 250%	Set the permissible load when the RT signal is ON.
			9999	The **Pr.607** setting is applied even when the RT signal is ON.
561 **H020**	**PTC thermistor protection level**	9999	0.5 to 30 kΩ	Set the PTC thermistor protection level (resistance).
			9999	PTC thermistor protection disabled
1016 **H021**	**PTC thermistor protection detection time**	0 s	0 to 60 s	Set the time from when the resistance of the PTC thermistor reaches the protection level until the protective function is activated.

*1 The setting range for FR-F820-02330(55K) or lower and FR-F840-01160(55K) or lower. The minimum setting increment is "0.01 A".

*2 The setting range for FR-F820-03160(75K) or higher, and FR-F840-01800(75K) or higher. The minimum setting increment is "0.1 A".

◆Electronic thermal O/L relay operation characteristic for induction motor (Pr.9, E.THM)

- This function detects the overload (overheat) of the motor and trips the inverter by stopping the operation of the transistor at the inverter output side.
- Set the rated current (A) of the motor in **Pr.9**. (If the motor has both 50 Hz and 60 Hz ratings and the **Pr.3 Base frequency** is set to 60 Hz, set to 1.1 times the 60 Hz rated motor current.)
- Set "0" in **Pr.9** to avoid activating the electronic thermal O/L relay function; for example, when using an external thermal relay for the motor. (Note that the output transistor protection of the inverter is activated. (E.THT))
- When using the Mitsubishi constant-torque motor, set **Pr.71 Applied motor** = "1, 13 to 16, 50, 53, 54". (This will set a 100% continuous torque characteristic in the low-speed range.)

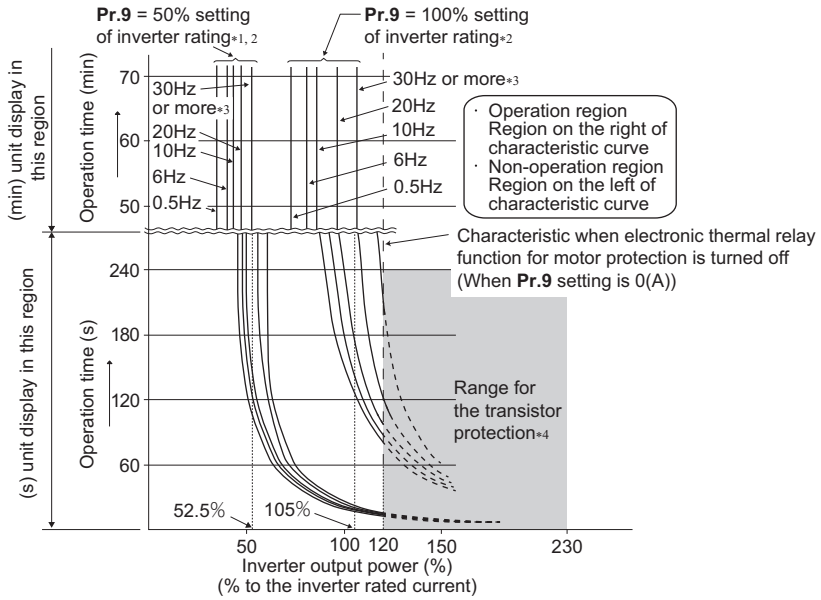

*1 When setting **Pr.9** to a value (current value) of 50% of the inverter rated current

*2 The % value denotes the percentage to the rated inverter current. It is not the percentage to the rated motor current.

*3 When the electronic thermal O/L relay of the Mitsubishi constant-torque motor is set, the characteristic curve is as shown in this diagram at 6 Hz or higher. (For selection of the operation characteristic , refer to page 337.)

*4 Transistor protection is activated depending on the temperature of the heatsink. The protection may be activated even with less than 120% depending on the operating conditions.

NOTE

- The internal accumulated heat value of the electronic thermal relay function is reset to the initial value by the inverter's power reset and reset signal input. Avoid unnecessary reset and power-OFF.
- Install an external thermal relay (OCR) between the inverter and motors to operate several motors, a multi-pole motor or a dedicated motor with one inverter. When setting an external thermal relay, note that the current indicated on the motor rating plate is affected by the line-to-line leakage current. (Refer to page 72.) The cooling effect of the motor drops during low-speed operation. Use a thermal protector or a motor with built-in thermistor.
- The protective characteristic of the electronic thermal O/L relay is degraded when there is a large difference in capacity between the inverter and motor, and when the set value is small. In such case, use an external thermal relay.
- A dedicated motor cannot be protected by an electronic thermal O/L relay. Use an external thermal relay.
- If the electronic thermal O/L relay is set to 3% or lower of the rated inverter current, the electronic thermal O/L relay may not operate.
- The transistor protection thermal O/L relay is activated early when the **Pr.72 PWM frequency selection** setting is increased.

◆Electronic thermal O/L relay when using IPM motor (Pr.9, E.THM)

- This function detects the overload (overheat) of the motor and trips the inverter by stopping the operation of the transistor at the inverter output side. (The operation characteristic is shown below.)
- Set the rated current (A) of the motor in **Pr.9**. Performing IPM parameter initialization automatically sets the rated current of the IPM motor. (Refer to page 151.)
- Set "0" in **Pr.9** to avoid activating the electronic thermal O/L relay function; for example, when using an external thermal relay for the motor.
  (Note that the output transistor protection of the inverter is activated. (E.THT))

  - MM-EFS, MM-THE4

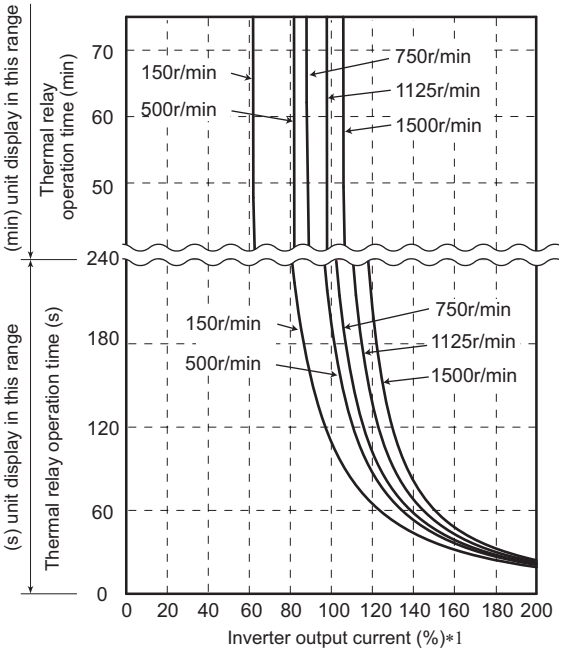

*1 The % value denotes the percentage to the rated motor current.

- Protective function activated area: the area right of the characteristic curve
- Normal operation area: the area left of the characteristic curve

NOTE

- The internal accumulated heat value of the electronic thermal relay function is reset to the initial value by the inverter's power reset and reset signal input. Avoid unnecessary reset and power-OFF.
- When using a PM motor other than MM-EFS/MM-THE4, set the free thermal parameters (**Pr.600** to **Pr.604)** in accordance with the motor characteristic.
- The transistor protection thermal O/L relay is activated early when the **Pr.72 PWM frequency selection** setting is increased.

◆Set two types of electronic thermal O/L relays (Pr.51)

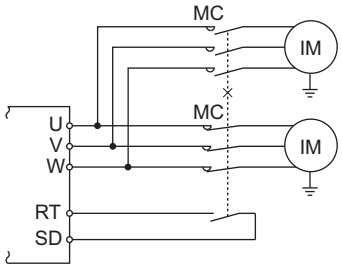

- These settings are used when rotating two motors with different rated current separately by a single inverter. (When rotating two motors together, use an external thermal relay.)
- Set the rated motor current for the second motor in **Pr.51**.
- When the RT signal is ON, thermal protection is provided based on the **Pr.51** setting.

Pr.450 Second applied motor	Pr.9 Electronic thermal O/L relay	Pr.51 Second electronic thermal O/L relay	RT-OFF		RT-ON	
			No.1 Motor	No.2 Motor	No.1 motor	No.2 motor
9999	0	9999	×	×	×	×
		0	×	×	×	×
		0.01 to 500 (0.1 to 3600)	×	Δ	×	O
9999	Other than 0	9999	O	×	O	×
		0	O	×	Δ	×
		0.01 to 500 (0.1 to 3600)	O	Δ	Δ	O
Other than 9999	0	9999	×	×	×	×
		0	×	×	×	×
		0.01 to 500 (0.1 to 3600)	×	Δ	×	O
Other than 9999	Other than 0	9999	O	Δ	Δ	O
		0	O	×	Δ	×
		0.01 to 500 (0.1 to 3600)	O	Δ	Δ	O

O: Values are accumulated by using the output current.
Δ: Values are accumulated by assuming the output current is "0 A" (cooling processing).
×: Electronic thermal O/L relay does not operate.

NOTE

- The RT signal is a second function selection signal. The RT signal also enables other second functions. (Refer to page 333.)
- The RT signal is assigned to the terminal RT in the initial setting. Set "3" in any of **Pr.178 to Pr.189** (input terminal function selection),to assign the RT signal to another terminal.

◆Motor permissible load level setting (Pr.607, Pr.608)

The electronic thermal O/L relay operation characteristic can be changed by setting the permissible load level according to the motor characteristics.

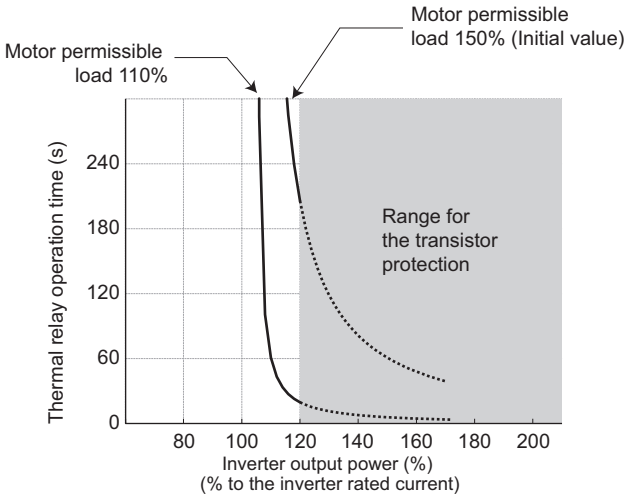

Example of motor permissible load setting (when Pr.9="100% of the inverter rating")

◆Electronic thermal O/L relay pre-alarm (TH) and warning signal (THP signal)

- If the accumulated electronic thermal value reaches 85% of the **Pr.9** or **Pr.51** setting, electronic thermal O/L relay function pre-alarm (TH) is displayed and the electronic thermal O/L relay pre-alarm (THP) signal is output. If the value reaches 100% of the **Pr.9** setting, the motor thermal protection (E.THM/E.THT) is activated to shut off the inverter output. The inverter output is not shut off with the TH display. The inverter output is not shut off with the warning signal (THP).
- For the terminal used for THP signal output, set "8 (positive logic)" or "108 (negative logic)" in any of **Pr.190 to Pr.196 (output terminal function selection)** to assign the function.

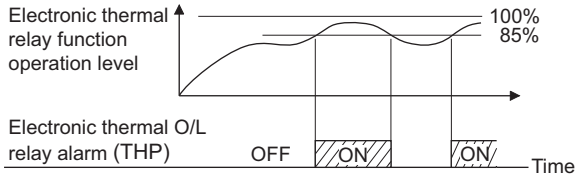

- 100%: Electronic thermal O/L relay activation value

NOTE

- Changing the terminal assignment using **Pr.190 to Pr.196 (output terminal function selection)** may affect the other functions. Set parameters after confirming the function of each terminal.

◆External thermal relay input (OH signal, E.OHT)

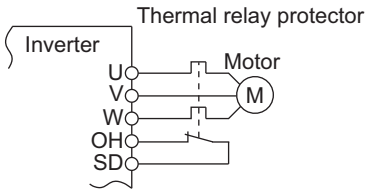

External thermal relay input connection diagram

- The external thermal relay input (OH) signal is used when using an external thermal relay or a thermal protector built into the motor to protect the motor from overheating.
- When the thermal relay function is activated, the external thermal operation (E.OHT) shuts off the inverter output.
- For the terminal used for the OH signal input, set "7" in any of **Pr.178 to Pr.189 (input terminal function selection)** to assign the function.

NOTE

- Changing the terminal assignment using **Pr.178 to Pr.189 (input terminal function selection)** may affect the other functions. Set parameters after confirming the function of each terminal.

◆PTC thermistor input (Pr.561, Pr.1016, E.PTC)

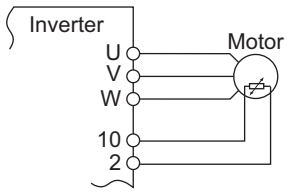

PTC thermistor input connection diagram

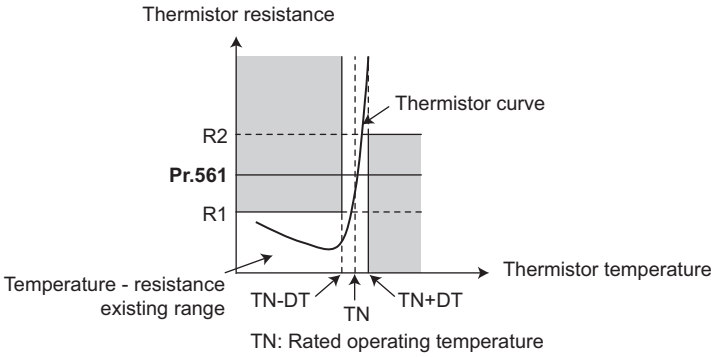

Example of PTC thermistor characteristics

- Output from the PTC thermistor, which is built into the motor, can be input to the terminals 2 and 10. If the input from the PTC thermistor reaches the resistor value set in **Pr.561 PTC thermistor protection level**, the PTC thermistor operation (E.PTC) shuts off the inverter output.
- Confirm the characteristic of the PTC thermistor to be used, and set the resistance for **Pr.561** around the center of the R1 and R2 values shown on the figure above so that it does not deviate from the protective function activating temperature TN. If the **Pr.561** setting becomes too close to R1 or R2, the protective function activating temperature may be too hot (protection is delayed), or too cold (too much protection).
- When the PTC thermistor protection is enabled (**Pr.561** ≠ "9999"), the resistance value for the PTC thermistor can be displayed on the operation panel (FR-DU08) or via RS-485 communication. (Refer to **page 263**.)

- When the PTC thermistor protection level setting is used, use **Pr.1016 PTC thermistor protection detection time** to set the time from when the resistance of the PTC thermistor reaches the protection level until the protective function (E.PTC) is activated.
  If the resistance of the PTC thermistor falls below the protection level within the protection detection time, the elapsed time count is cleared.

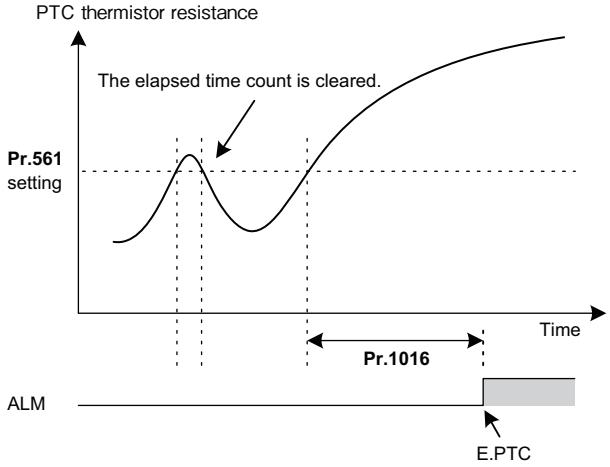

NOTE

- When using terminal 2 for PTC thermistor input (**Pr.561** ≠ "9999"), the terminal 2 will not operate as an analog frequency command terminal. The PID and dancer control functions assigned to the terminal 2 will be also disabled. Use **Pr.133 PID action set point** to set the set point for the PID function.
- To input power to the PTC thermistor power supply, always use the terminal 10. Do not use any other terminals or an external power supply Otherwise, the PTC thermistor protection (E.PTC) does not operate properly.
- When E.PTC is activated, the alarm display, "External protection (AU terminal)", may appear on the parameter unit (FR-PU07), but it is not a fault.

◆Overheat protection to match the characteristic of the motor (Pr.600 to Pr.604, Pr.692 to Pr.696)

- The activation level of the electronic thermal O/L relay can be varied to match the motor temperature characteristic.
- The electronic thermal O/L relay's activation level can be set using the combination of three points (**Pr.600, Pr.601**), (**Pr.602, Pr.603**), (**Pr.604, Pr.9**). Two or more points are required for setting.
- The electronic thermal O/L relay's activation level can be set to using the combination of three points (**Pr.692, Pr.693**), (**Pr.694, Pr.695**), (**Pr.696, Pr.51**) when the RT signal is ON.

Continuous operation characteristic

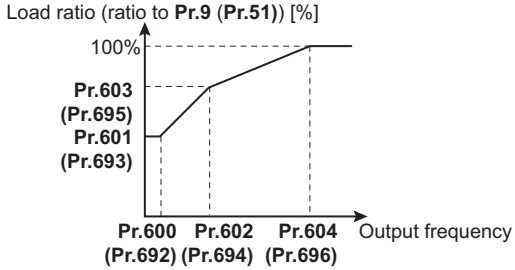

Setting example 1

Pr.9=100% of the rated motor current
Pr.600=6Hz
Pr.601=50%
Pr.602=30Hz
Pr.603=70%
Pr.604=60Hz

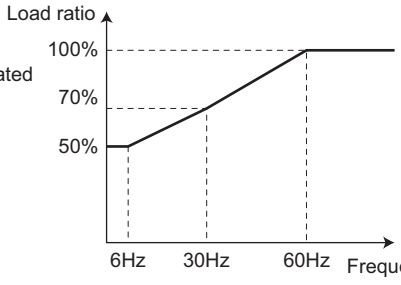

Setting example 2

Pr.600=120Hz
Pr.601=60%
Pr.602=3Hz
Pr.603=50%
Pr.604=60Hz

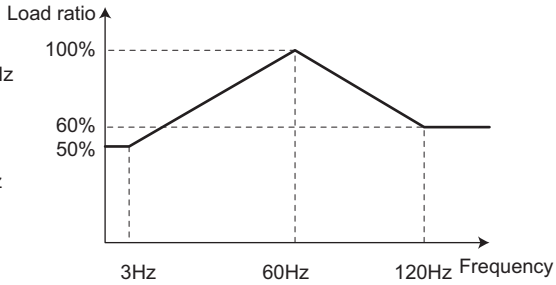

- When setting **Pr.600**, **Pr.602**, **Pr.604** (**Pr.692, Pr.694, Pr.696**) to the same frequency, the following graph's upper level will be applied.

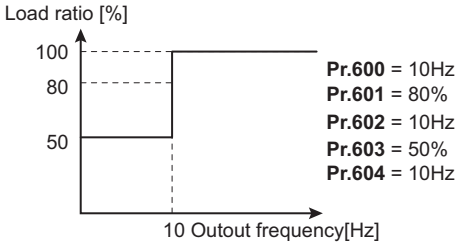

NOTE

- Make sure to set the parameters according to the motor temperature characteristic used.

Parameters referred to

Pr.71 Applied motor page 337
Pr.72 PWM frequency selection page 179
Pr.178 to Pr.189 (input terminal function selection) page 329
Pr.190 to Pr.196 (output terminal function selection) page 288

5.7.2 Cooling fan operation selection

A cooling fan is built into the inverter and its operation can be controlled.

Pr.	Name	Initial value	Setting range	Description
244 H100	Cooling fan operation selection	1	0	A cooling fan operates at power ON. Cooling fan ON/OFF control is invalid. (The cooling fan is always ON at power ON)
			1	Cooling fan ON/OFF control is valid. The fan is always ON while the inverter is running. During a stop, the inverter status is monitored and the fan switches ON/OFF according to the temperature.
			101 to 105	Cooling fan ON/OFF control is valid. Set the cooling fan stop waiting time within 1 to 5 s.

◆Cooling fan always ON (Pr.244 = "0")

- When **Pr.244** = "0", the cooling fan operates at power ON. If the fan stops at this time, fan operation is regarded as faulty, Fan alarm FN [FN] is displayed on the operation panel, and the fan fault (FAN) and alarm (LF) signals are output.
- For the terminal used for the FAN signal output, set "25 (positive logic)" or "125 (negative logic)" in any of **Pr.190 to Pr.196 (output terminal function selection)**. For the LF signal, set "98 (positive logic)" or "198 (negative logic)".

◆Cooling fan operation control (Pr.244 = "1" (initial value), "101 to 105")

- The cooling fan operation is controlled when **Pr.244** = "1". When the inverter is running, the cooling fan operates; and when it is stopped, the cooling fan operates according to the temperature of the inverter heatsink. If the fan stops although it meets the conditions for running, fan operation is regarded as faulty, [FN] is displayed on the operation panel, and the fan signal and LF signals are output.
- To prevent the cooling fan from turning ON and OFF repeatedly during frequent starts/stops (inching), the cooling fan stop waiting time can be set. The waiting time when **Pr.244** = "101 to 105" is **Pr.244**-100 (or 1 s, if the **Pr.244** = "101").

◆Cooling fan operation command signal (Y206 signal)

- The cooling fan operation command signal (Y206 signal) can be output when the inverter cooling fan meets the conditions for running. The function can be used when the fan installed on the enclosure is synchronized with the inverter cooling fan.
- Y206 signal indicates the operating command condition of the inverter cooling fan depending on the power supply ON/OFF or the **Pr.244** settings. The signal does not indicate the actual operation of the cooling fan. (The signal is output even if the cooling fan is stopped due to a fault.)
- To use the Y206 signal, set "206 (positive logic) or 306 (negative logic)" in one of **Pr.190 to Pr.196 (output terminal function selection)** to assign function to an output terminal.

NOTE

- The cooling fan is installed on the FR-F820-00105(2.2K) or higher and FR-F840-00083(3.7K) or higher.
- Changing the terminal assignment using **Pr.190 to Pr.196 (output terminal function selection)** may affect the other functions. Set parameters after confirming the function of each terminal.

Parameters referred to

Pr.190 to Pr.196 (output terminal function selection) page 288

5.7.3 Earth (ground) fault detection at start V/F Magnetic flux

Select whether to enable/disable earth (ground) fault detection at start. When enabled, earth (ground) fault detection is performed immediately after a start signal input to the inverter.

Pr.	Name	Initial value	Setting range	Description
249 H101	Earth (ground) fault detection at start	0	0	Without the earth (ground) fault detection at start
			1	With the earth (ground) fault detection at start

- If a ground fault is detected at start while **Pr.249** = "1", the output-side earth (ground) fault overcurrent (E.GF) is displayed and the outputs are shut off. (Refer to page 545)
- The **Pr.249** setting is enabled during V/F control and Advanced magnetic flux vector control
- When the **Pr.72 PWM frequency selection** selection setting is high, enable the ground fault detection at start.

NOTE

- Because of the detection performed at start, the output is delayed by approximately 20 ms at every start.
- Use **Pr.249** to enable/disable ground fault detection at operation start. Ground faults are detected always during operation regardless of the **Pr.249** setting.
- If a smaller-capacity motor is used with the FR-F820-00250(5.5K) or higher and FR-F840-00126(5.5K) or higher, ground fault protection may be insufficient.

5.7.4 Varying the activation level of the undervoltage protective function

If the undervoltage protection (E.UVT) activates due to unstable voltage in the power supply, the undervoltage level (DC bus voltage value) can be changed. (only available for 400 V class)

Pr.	Name	Initial value	Setting range	Description
598 H102	Undervoltage level	9999	350 to 430 VDC	Set the DC voltage value at which E.UVT occurs.
			9999	E.UVT occurs at 430 VDC

NOTE

- Do not use this function when switching to an external battery, since the inrush current when power is restored increases, as the undervoltage level is decreased.
- The **Pr.598** settings are only valid for 400 V class inverters.
- The **Pr.598** setting is disabled during PM motor control. The **Pr.598** setting is also invalid during PM motor control for the first or second functions.

5.7.5 Initiating a protective function

A fault (protective function) is initiated by setting the parameter.
This function can be used to check how the system operates at activation of a protective function.

Pr.	Name	Initial value	Setting range	Description
997 H103	Fault initiation	9999	16 to 253	The setting range is same with the one for fault data codes of the inverter (which can be read through communication). Written data is not stored in EEPROM.
			9999	The read value is always "9999". With this setting, the protective function does not activate.

- To initiate a fault (protective function), set the assigned number of the protective function you want to initiate in **Pr.997**.
- The value set in **Pr.997** is not stored in EEPROM.
- When a protective function activates, the inverter trips, a fault is displayed, and a fault signal (ALM, ALM2) is output.
- The latest fault in the faults history is displayed while the fault initiation function is in operation. After a reset, the faults history goes back to the previous status. (The protective function generated by the fault is not saved in the faults history.)
- Perform inverter reset to cancel the protective function.
- For the selectable parameter by **Pr.997** and the corresponding protective functions, refer to page 535.

NOTE

- If a protective function is already operating, no fault can be activated by **Pr.997**.
- The retry function is disabled when a protective function has been initiated by the fault initiation function.
- If a fault occurs after a protective function has been activated, the protective function indication does not change. The fault is not saved in the faults history either.

5.7.6 I/O phase loss protection selection

The output phase loss protection function, which stops the inverter output if one of the three phases (U, V, W) on the inverter's output side (load side) is lost, can be disabled.
The input phase loss protective function on the inverter input side (R/L1, S/L2, T/L3) can be enabled.

Pr.	Name	Initial value	Setting range	Description
251 H200	Output phase loss protection selection	1	0	Without output phase loss protection
			1	With output phase loss protection
872 H201 *1	Input phase loss protection selection	0	0	Without input phase loss protection
			1	With input phase loss protection

*1 The setting is available only for standard models.

◆Output phase loss protection selection (Pr.251)

- When **Pr.251** = "0", output phase loss (E.LF) protection is disabled.

◆Input phase loss protection selection (Pr.872) (Standard models)

- When **Pr. 872** = "1", input phase loss (E.ILF) protection will be activated if one of three phases is detected to be lost for 1 s continuously.

NOTE

- When several motors are connected, output phase loss cannot be detected even if the wiring to one motor loses phase.
- If an input phase is lost while **Pr.872** = "1" (with input phase loss protection), **Pr.261 Power failure stop selection** ≠ "0" (power failure stop function enabled), the motor decelerates to stop without outputting E.ILF.
- In the case of R/L1, S/L2 phase loss, the input phase loss protection will not operate, and the inverter will trip.
- If an input phase loss continues for a long time, the converter section and capacitor lives of the inverter will be shorter.

Parameters referred to

Pr.261 Power failure stop selection page 426

5.7.7 Retry function

This function allows the inverter to reset itself and restart at activation of the protective function (fault indication). The retry generating protective functions can be also selected.
When the automatic restart after instantaneous power failure function is selected (**Pr.57 Restart coasting time** ≠ 9999), the restart operation is also performed after a retry operation as well as after an instantaneous power failure. (Refer to page 414 and page 420 for the restart operation.)

Pr.	Name	Initial value	Setting range	Description
65 H300	**Retry selection**	0	0 to 5	A retry-making fault can be selected. (Refer to the table **on the next page**.)
67 H301	**Number of retries at fault occurrence**	0	0	No retry function
			1 to 10	Set the number of retries at a fault occurrence. A fault output is not provided during the retry operation.
			101 to 110	Set the number of retries at a fault occurrence. (The setting value minus 100 is the number of retries.) A fault output is provided during the retry operation.
68 H302	**Retry waiting time**	1 s	0.1 to 600 s	Set the waiting time from a fault occurrence to a retry.
69 H303	**Retry count display erase**	0	0	Clears the number of successful restarts made by retries.

◆Setting the retry function (Pr.67, Pr.68)

- When the inverter protective function is operating (fault indication), the retry function automatically cancels (resets) the protective function after the time set in **Pr.68**. The retry function then restarts the operation from the starting frequency.
- Retry operation is enabled when **Pr.67** ≠ "0". For **Pr.67**, set the number of retries at activation of the protective function.

Pr.67 setting	Fault output during retry operation	Retry count
0	—	No retry function
1 to 10	Not provided	1 to 10 times
101 to 110	Provided	1 to 10 times

- When retries fail consecutively more than the number of times set in **Pr.67**, a retry count excess (E.RET) occurs, resulting in an inverter retries. (Refer to the retry failure example.)
- Use **Pr.68** to set the waiting time from a protective function activation to a retry in the range of 0.1 to 600 s.
- During retry operation, the during retry (Y64) signal is ON. For the Y64 signal, set "64 (positive operation)" or "164 (negative operation)" in any of **Pr.190** to **Pr.196** (output terminal function selection) to assign the function.

◆Retry count check (Pr.69)

- Reading the **Pr.69** value provides the cumulative number of successful restart times made by retries. The cumulative count in **Pr.69** increases by 1 when a retry is successful. Retry is regarded as successful when normal operation continues without a fault for the **Pr.68** setting multiplied by four or longer (3.1 s at the shortest). (When retry is successful, the cumulative number of retry failures is cleared.)
- Writing "0" in **Pr.69** clears the cumulative count.

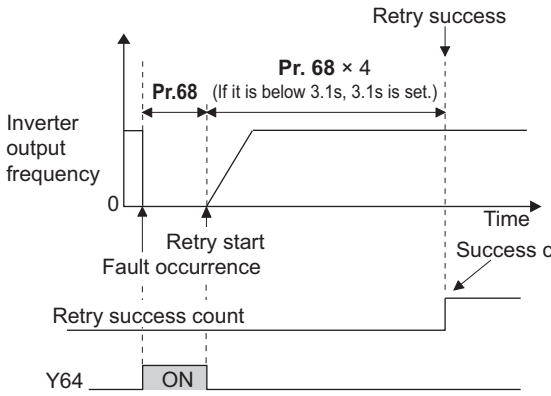

Retry success example

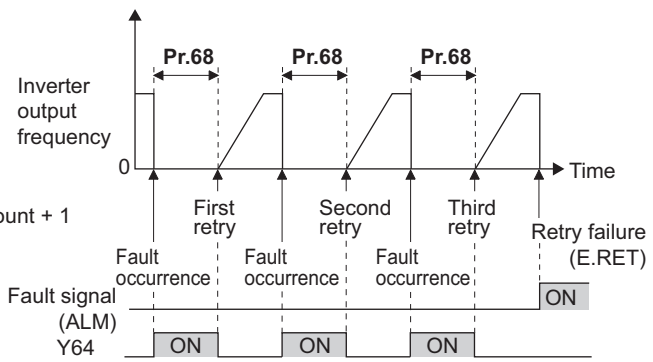

Retry failure example

◆Selecting retry generating faults (Pr.65)

• Using **Pr.65**, you can select the fault that will cause a retry. No retry will be made for the fault not indicated. (For the fault details, refer to page 535.) ● indicates the faults selected for retry.

Retry-making fault	Pr.65 setting					
	0	1	2	3	4	5
E.OC1	●	●		●	●	●
E.OC2	●	●		●	●	
E.OC3	●	●		●	●	●
E.OV1	●		●	●	●	
E.OV2	●		●	●	●	
E.OV3	●		●	●	●	
E.THM	●					
E.THT	●					
E.IPF	●				●	
E.UVT	●				●	
E. BE	●				●	
E. GF	●				●	
E.OHT	●					
E.OLT	●				●	
E.OPT	●				●	

Retry-making fault	Pr.65 setting					
	0	1	2	3	4	5
E.OP1	●				●	
E. PE	●				●	
E.OS	●				●	
E.PTC	●					
E.CDO	●				●	
E.SER	●				●	
E.USB	●				●	
E.ILF	●				●	
E.PID	●				●	
E.PCH	●				●	
E.SOT	●	●		●	●	●
E.LCI	●				●	
E.LUP	●				●	
E.LDN	●				●	

NOTE

- Use the retry function only when the operation can be resumed after resetting a protective function activation. Making a retry against the protective function, which is activated by an unknown condition, will lead the inverter and motor to be faulty. Identify what condition the protective function was activated, and eliminate such condition before resuming the operation.
- If the retry function operates during PU operations, the operating conditions (forward/reverse rotation) are stored; and operations resume after retry reset.
- Only the fault details for the first fault that occurred are stored in the faults history.
- The reset by the retry function does not clear the accumulated data of the electronic thermal O/L relay, regenerative brake duty, etc. (This is different from power supply reset or reset by RES signal.)
- When the parameter storage device fault (E.PE) is occurring and reading of the retry-function-related parameters is not possible, retry cannot operated.
- Changing the terminal assignment using **Pr.190 to Pr.196 (output terminal function selection)** may affect the other functions. Set parameters after confirming the function of each terminal.

⚠ Caution

● **When the retry function is set enabled, stay away from the motor and machine in the case of an inverter trip. The motor and machine will start suddenly (after the reset time has elapsed) after the inverter trip. When the retry function is set enabled, apply in easily visible places the CAUTION stickers supplied to this product.**

Parameters referred to

Pr.57 Restart coasting time ☞ page 414, page 420

5.7.8 Emergency drive

This function is used in case of emergency such as a fire to forcibly continue inverter operation to drive a motor without activating protective functions even if the inverter detects a fault. Using this function may cause damage of the motor or the inverter because driving the motor is given the highest priority. Use this function for emergency operation only.
When the inverter is damaged by a fault, the motor operation can be continued by switching to the commercial power supply operation.
The emergency drive function is available only for the standard model.

Pr.	Name	Initial value		Setting range	Description
		FM	CA		
523 **H320**∗1	**Emergency drive mode selection**	9999		100, 111, 112, 121, 122, 123, 124, 200, 211, 212, 221, 222, 223, 224, 300, 311, 312, 321, 322, 323, 324, 400, 411, 412, 421, 422, 423, 424	Select the operation mode of the emergency drive.
				9999	Emergency drive disabled
524 **H321** ∗1∗2	**Emergency drive running speed**	9999		0 to 590 Hz∗3	Set the running frequency in the fixed frequency mode of the emergency drive. (when the fixed frequency mode is selected in **Pr.523**)
				0 to 100%∗3	Set the PID set point in the PID control mode of the emergency drive. (when the PID control mode is selected in **Pr.523**)
				9999∗3	Emergency drive disabled
515 **H322**∗1	**Emergency drive dedicated retry count**	1		1 to 200	Set the retry count during emergency drive operation.
				9999	Without retry count excess (no restriction on the number of retries)
1013 **H323**∗1	**Emergency drive running speed after retry reset**	60 Hz	50 Hz	0 to 590 Hz	Set the frequency for operation after a retry when any of E.CPU, E.1 to E.3, E.5 to E.7 occurs during emergency drive operation.
514 **H324**∗1	**Emergency drive dedicated waiting time**	9999		0.1 to 600 s	Set the retry waiting time during emergency drive operation.
				9999	As set in **Pr.68**.
136 **A001**	**MC switchover interlock time**	1 s		0 to 100 s	Set the operation interlock time for MC2 and MC3.
139 **A004**	**Automatic switchover frequency from inverter to bypass operation**	9999		0 to 60 Hz	Set the frequency at which the inverter-driven operation is switched over to the commercial power supply operation when the condition for electronic bypass is established during emergency drive operation.
				9999	Without automatic switchover
57 **A702**	**Restart coasting time**	9999		0	Coasting time differs according to the inverter capacity. (Refer to page 414.)
				0.1 to 30 s	Set the waiting time for the inverter to perform a restart after the power lost by an instantaneous power failure restores.
				9999	No restart

∗1 The setting is available only for standard models.
∗2 Set **Pr.524** after setting **Pr.523**.
∗3 When **Pr.523** = "100, 200, 300, 400", the emergency drive is activated regardless of the **Pr.524** setting.

◆Connection diagram

• An example connection diagram of the emergency drive is shown below.

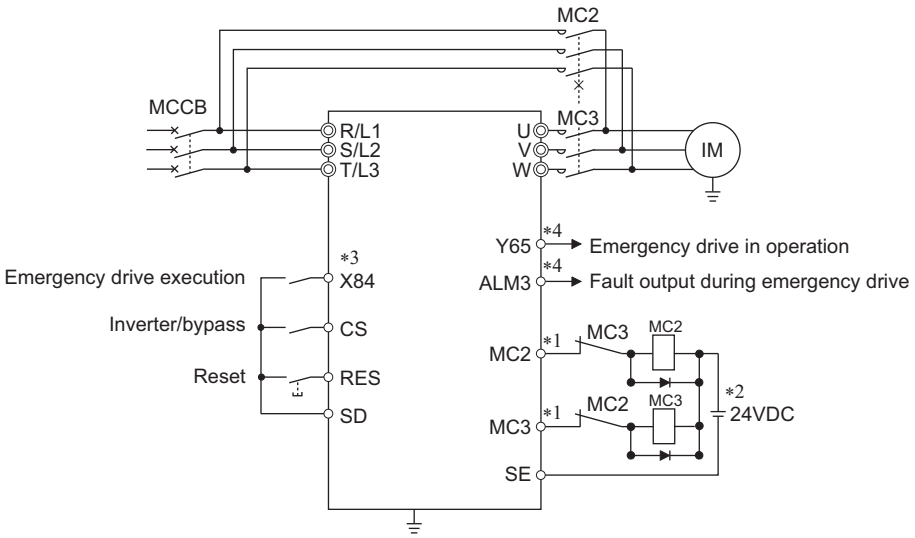

*1 Be careful of the capacity of the sequence output terminals.
The applied terminals differ by the settings of **Pr.190 to Pr.196 (output terminal function selection)**.

Output terminal capacity	Output terminal permissible load
Inverter open collector output (RUN, SU, IPF, OL, FU)	24 VDC 0.1 A
Inverter relay output (A1-C1, B1-C1, A2-B2, B2-C2) Relay output option (FR-A8AR)	230 VAC 0.3 A 30 VDC 0.3 A

*2 When connecting a DC power supply, insert a protective diode. When connecting an AC power supply, use the relay output option (FR-A8AR) and use contact outputs.

*3 The applied terminals differ by the settings of **Pr.180 to Pr.189 (input terminal function selection)**.

*4 The applied terminals differ by the settings of **Pr.190 to Pr.196 (output terminal function selection)**.

NOTE

• Always provide mechanical interlocks for MC2 and MC3.

◆Emergency drive execution sequence

POINT

- When X84 signal is ON for 3 s, the emergency drive is executed.
- Y65 signal turns ON during emergency drive operation.
- "ED" appears on the operation panel during emergency drive operation.
- ALM3 signal turns ON when a fault occurs during emergency drive operation.

- Operation of the emergency drive function (when the switchover to the commercial power supply during emergency drive is disabled, and the retry in case of critical faults is selected)

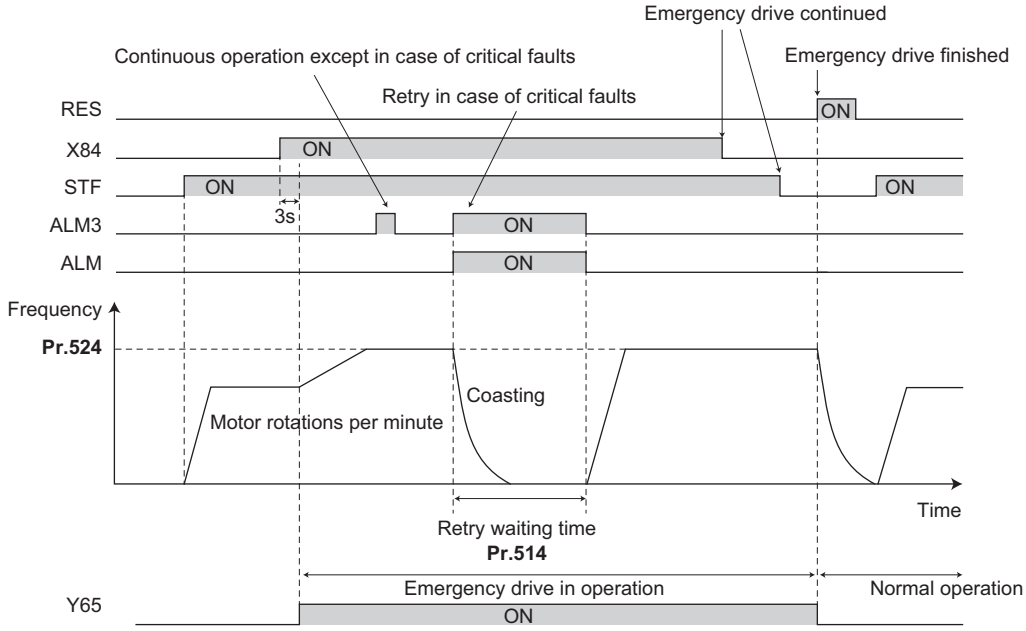

- When the electronic bypass during emergency drive is activated (CS signal is turned ON) (when the switchover to the commercial power supply during emergency drive is enabled)

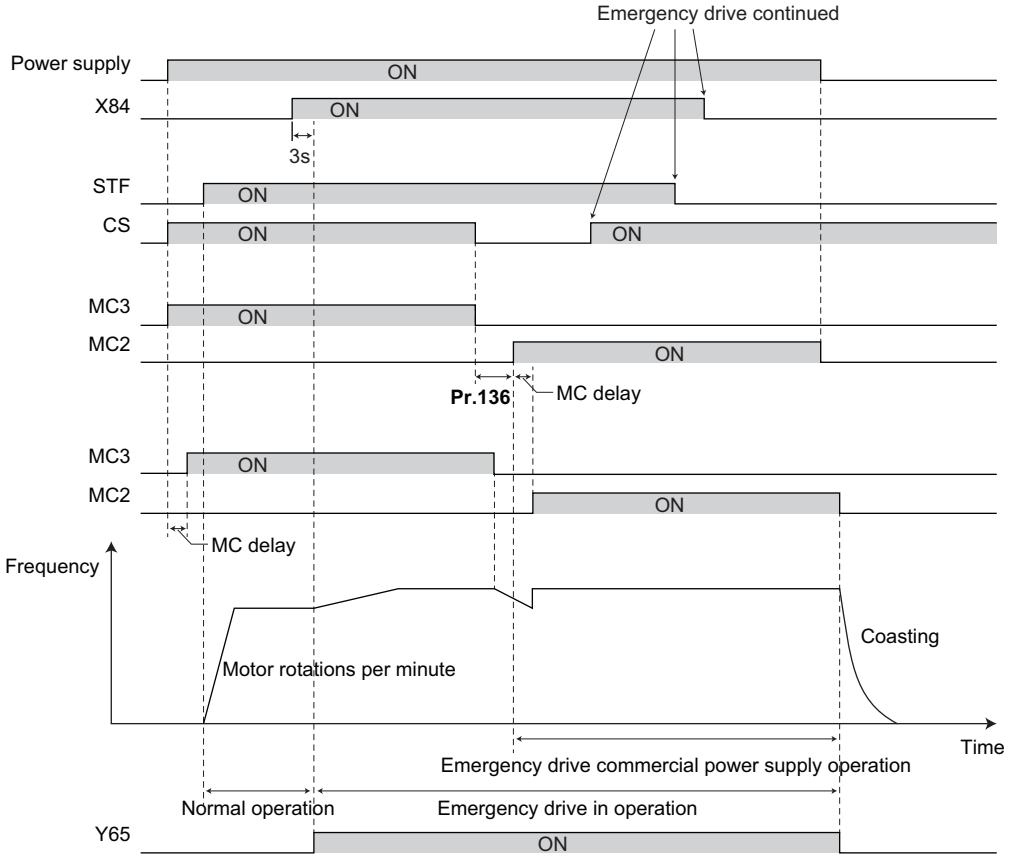

◆Emergency drive operation selection (Pr.523, Pr.524)

- Use **Pr.523 Emergency drive mode selection** to select the emergency drive operation. Set a value in the hundreds place to select the operation when a valid protective function is activated (critical fault) during emergency drive. Set values in the ones and tens places to select the operation method.

Pr.523 setting	Emergency drive operation mode		Description
1[][]	Output shutoff mode		Output shutoff at a critical fault occurrence.
2[][]	Retry / output shutoff mode		Retry operation at a critical fault occurrence. (Output shutoff at the occurrence of a fault for which retry is not permitted.) The output is shut off when a critical fault for which retry is not permitted occurs, or the retry count is exceeded.
3[][]*1	Retry / commercial mode		Retry operation at a critical fault occurrence. (Electronic bypass at the occurrence of a fault for which retry is not permitted.) The operation is switched over to the commercial power supply operation when a critical fault for which retry is not permitted occurs, or the retry count is exceeded. While **Pr.515** = "9999", the operation is switched over to the commercial power supply operation when the retry count reaches 200.
4[][]*1	Commercial mode		The operation is switched over to the commercial power supply operation when a critical fault occurs.
[]00	Normal operation mode		The operation is performed with the same set frequency and by the same starting command as those in the normal operation. Use this mode to avoid output shutoff due to a fault.
[]11	Fixed frequency mode	Forward rotation	The operation is forcibly performed with the frequency set in **Pr.524**. Even when the motor is stopped, the operation is started by the emergency drive execution.
[]12		Reverse rotation	
[]21	PID control mode	Forward rotation	The operation is performed under PID control using the **Pr.524** setting as a set point. The measured values are input in the method set in **Pr.128**.
[]22		Reverse rotation	
[]23		Forward rotation (Second PID measured value input)	The operation is performed under PID control using the **Pr.524** setting as a set point. The measured values are input in the method set in **Pr.753**.
[]24		Reverse rotation (Second PID measured value input)	
9999	Emergency drive disabled		

*1 Under PM motor control, the operation is not switched over to the commercial power supply operation the output is shut off.

◆Retry operation during emergency drive (Pr.515, Pr.514)

- Set the retry operation during emergency drive operation. Use **Pr.515 Emergency drive dedicated retry count** to set the retry count, and use **Pr.514 Emergency drive dedicated waiting time** to set the retry waiting time.
- The ALM signal output conditions depend on the **Pr.67 Number of retries at fault occurrence** setting. (Refer to page 236.)
- For the protective functions (critical faults) for which a retry is performed during emergency drive operation, refer to page 243.

NOTE

- During emergency drive operation, **Pr.65 Retry selection** is not available.

◆Electronic bypass during emergency drive (Pr.136, Pr.139, Pr.57)

- For selecting the commercial mode (**Pr.523** = "3[][], 4[][]"), setting is required as follows.
  - Set **Pr.136 MC switchover interlock time** and **Pr.139 Automatic switchover frequency from inverter to bypass operation** and assign MC2 and MC3 signals to output terminals.
  - When CS signal is assigned to an input terminal, set **Pr.57 Restart coasting time** ≠ "9999" and turns the CS signal ON. (In the initial setting, the CS signal is assigned to the terminal CS.)
  - V/F control or Advanced magnetic flux vector control (Under PM motor control, the operation is not switched over to the commercial power supply operation the output is shut off.)
- During emergency drive operation, the operation is switched over to the commercial power supply operation when any of the following conditions is satisfied.
  - CS signal turns OFF.
  - A critical fault for which retry is not permitted occurs while **Pr.523**="3[][]".
  - A critical fault occurs while **Pr.523**="4[][]".
- While the motor is driven by the inverter during emergency drive operation, if a condition for electronic bypass is satisfied, the output frequency is accelerated/decelerated to the **Pr.139** setting. When the frequency reaches the set frequency, the operation is switched over to the commercial power supply operation. (The operation is immediately switched over to the commercial power supply operation during output shutoff due to a critical fault occurrence.)
- If the parameter for electronic bypass is not set while the commercial mode is set (**Pr.523** = "3[][], 4[][]"), the operation is not switched over to the commercial power supply operation even when a condition for switchover is satisfied, and the output is shut off.
- For the terminals used for the MC2 and MC3 signal output, set "18 (positive logic)" and "19 (positive logic)" in any two of **Pr.190 to Pr.196 (output terminal function selection)** to assign the function.
- Operation of magnetic contactor (MC2, MC3)

Magnetic contactor	Installation location	Operation	
		During commercial power supply operation	During inverter operation
MC2	Between power supply and motor	Shorted	Open
MC3	Between inverter output and motor	Open	Shorted

- The input signals are as shown below.

Signal	Function	Operation	MC operation *3	
			MC2	MC3
CS	Inverter/bypass	ON Inverter operation	×	○
		OFF Emergency drive commercial power supply operation*1	○	×
X84	Emergency drive execution	ON Emergency drive execution	—	—
		OFF Normal operation*2	×	○
RES	Operation status reset	ON Reset	×	Invariance
		OFF Normal operation	—	—

*1 If the signal is turned ON after switchover to the emergency drive commercial power supply operation, the operation will not be returned to the inverter-driven operation.

*2 If the signal is turned OFF during the emergency drive operation, the operation will not be returned to normal.

*3 MC operation

○: MC-ON

×: MC-OFF

—: During inverter operation, MC2-OFF, MC3-ON
During commercial power supply operation, MC2-ON, MC3-OFF

Invariance: The status before changing the signal ON or OFF is held.

NOTE

- During electronic bypass operation while the electronic bypass sequence is enabled (**Pr.135** = "1"), the emergency drive function is not available.

◆PID control during emergency drive operation

- During emergency drive operation in the PID control mode, the operation is performed under PID control using the **Pr.524** setting as a set point. Input the measured values in the method set in **Pr.128** or **Pr.753**.
- When the PID control mode is selected for emergency drive, the PID action during emergency drive operation is as follows depending on the PID control setting.

Item	PID control action		
	Set point / measured value input setting	Deviation input setting	Without PID control setting
Measured value input selection	Held	Terminal 4 input	Terminal 4 input
Forward action / reverse action selection	Held	Held	Reverse action (initial setting)
Proportional band	Held	Held	100% (initial setting)
Integral time	Held	Held	1 s (initial setting)
Differential time	Held	Held	Not used (initial setting)
Applied to the frequency / calculation only	Applied to the frequency	Applied to the frequency	Applied to the frequency
Other PID-related settings	Held	Held	Held

- While the "retry" (**Pr.523** = "22[], 32[]") is selected in the PID control mode, if a retry occurs at an occurrence of E.CPU, E.1 to E.3, E.5 to E.7 during emergency drive operation, the operation is performed not under PID control but with the fixed frequency. Use **Pr.1013 Emergency drive running speed after retry reset** to set the fixed frequency.

NOTE

- For details of the PID control, refer to page 378.

◆Operation of protective functions during emergency drive

- Operation of protective functions during emergency drive is as follows.

Protective function	Operation during emergency drive
E.OC1	Retry
E.OC2	Retry
E.OC3	Retry
E.OV1	Retry
E.OV2	Retry
E.OV3	Retry
E.THT	Retry
E.THM	Retry
E.FIN	Retry
E.IPF	Disabled
E.UVT	Disabled
E.ILF	Disabled
E.OLT	Retry
E.SOT	Retry
E.LUP	Disabled
E.LDN	Disabled
E.BE	Retry*1
E.GF	Retry
E.LF	Disabled

Protective function	Operation during emergency drive
E.OHT	Retry
E.PTC	Retry
E.OPT	Disabled
E.OP1	Disabled
E.OP2	Disabled
E.OP3	Disabled
E.16	Disabled
E.17	Disabled
E.18	Disabled
E.19	Disabled
E.20	Disabled
E.PE	Output shutoff
E.PUE	Disabled
E.RET	Output shutoff
E.PE2	Output shutoff
E.CPU	Retry
E.CTE	Disabled
E.P24	Disabled
E.CDO	Retry

Protective function	Operation during emergency drive
E.IOH	Output shutoff
E.SER	Disabled
E.AIE	Disabled
E.USB	Disabled
E.SAF	Retry*1
E.PBT	Retry*1
E.OS	Disabled
E.LCI	Disabled
E.PCH	Disabled
E.PID	Disabled
E.1	Retry
E.2	Retry
E.3	Retry
E.5	Retry
E.6	Retry*1
E.7	Retry*1
E.13	Retry*1

*1 While the switchover to the commercial power supply operation during emergency drive operation is enabled, when the same protective function is activated twice consecutively, the retry is attempted up to twice.

- The fault output during emergency drive operation is as follows.

Signal	Pr.190 to Pr.196 setting		Description
	Positive logic	Negative logic	
ALM	99	199	Turns ON at the occurrence of a fault that causes the above-mentioned "retry" or "output shutoff" during emergency drive operation.
ALM3	66	166	Output when a fault occurs during emergency drive operation. During emergency drive operation, if a fault that does not activate any protective function occurs, the signal turns ON for 3 s and then turns OFF.

◆Input signal operation

- During emergency drive operation in the fixed frequency mode or in the PID control mode, input signals unrelated to the emergency drive become invalid with some exceptions.
- The table below shows functions of the signals that do not become invalid during emergency drive operation in the fixed frequency mode or in the PID control mode.

Input signal status	Fixed frequency mode	PID control mode
Valid	OH, TRG, TRC, X51, RES, X70, X71	OH, TRG, TRC, X51, RES, X70, X71
Held	RT, X18, SQ, X84	RT, X18, SQ, X64, X65, X66, X67, X79, X84
Always-ON	—	X14, X77, X78, X80

◆Emergency drive status monitor

- Set "68" in **Pr.52, Pr.774 to Pr.776, Pr.992** to monitor the status of the emergency drive on the operation panel.
- Description of the status monitor

Operation panel indication	Description		
	Emergency drive setting	Emergency drive operating status	
0	Emergency drive function setting is not available.	—	
1	Electronic bypass during emergency drive operation is disabled.	During normal operation	
2		During emergency drive operation	Operating properly
3			A certain alarm is occurring.
4			A critical fault is occurring. The operation is being continued by the retry.
5			A critical fault is occurring. The continuous operation is not allowed due to output shutoff.
11	Electronic bypass during emergency drive operation is enabled.	During normal operation	
12		During emergency drive operation	Operating properly
13			A certain alarm is occurring.
14			A critical fault is occurring. The operation is being continued by the retry.
15			A critical fault is occurring. The continuous operation is not allowed due to output shutoff.
2[]*1		Electronic bypass is started during emergency drive (during acceleration/deceleration to the switchover frequency).	
3[]*1		During electronic bypass during emergency drive (waiting during the interlock time).	
4[]*1		During commercial power supply operation during emergency drive	

*1 The first digit remains the same as the previous numerical value (fault condition).

NOTE

- When the "retry" (**Pr.523** = "2[][], 3[][]") is selected, it is recommended to use the automatic restart after instantaneous power failure function at the same time.
- Parameter setting is not available during emergency drive operation.
- To return to the normal operation during emergency drive operation, do the following.
  (The operation will not be returned to normal only by turning OFF the X84 signal.)
  - Reset the inverter, or turn the power supply OFF.
  - Clear a fault by turning ON the X51 signal while the sequence function is enabled (when the protective function is activated).
- The operation is switched over to the commercial power supply operation in case of the following during emergency drive operation.
  24 V external power supply operation, power failure status or operation with the power supplied through R1/S1, undervoltage
- While the electronic bypass sequence is set or when the operation is performed with the power supplied through R1/S1, when **Pr.30** = "2", the emergency drive function is disabled.

⚠Caution

- **When the emergency drive operation is performed, the operation is continued or the retry is repeated even when a fault occurs, which may damage or burn the inverter and motor. Before restarting the normal operation after using this function, make sure that the inverter and motor have no fault. Any damage of the inverter or the motor caused by using the emergency drive function is not covered by the warranty even within the free guarantee period.**

5.7.9 Limiting the output frequency (maximum/ minimum frequency)

Motor speed can be limited. Clamp the output frequency at the upper and lower limits.

Pr.	Name	Initial value	Setting range	Description
1 H400	**Maximum frequency**	120 Hz*1 60 Hz*2	0 to 120 Hz	Set the upper limit of the output frequency.
2 H401	**Minimum frequency**	0 Hz	0 to 120 Hz	Set the lower limit of the output frequency.
18 H402	**High speed maximum frequency**	120 Hz*1 60 Hz*2	0 to 590 Hz	Set when operating at 120 Hz or higher.

*1 For the FR-F820-02330(55K)or lower and FR-F840-01160(55K) or lower.
*2 For the FR-F820-03160(75K)or higher and FR-F840-01800(75K) or higher.

◆Setting the maximum frequency (Pr.1, Pr.18)

- Set **Pr.1 Maximum frequency** to the upper limit of the output frequency. If the value of the frequency command entered is higher than the setting, the output frequency is clamped at the maximum frequency.
- To operate at a frequency higher than the 120 Hz, adjust the upper output frequency limit with **Pr.18 High speed maximum frequency**. (When setting a frequency in **Pr.18**, the **Pr.1** setting automatically changes to the frequency set in **Pr.18**. Also, when setting a frequency in **Pr.1**, the **Pr.18** setting automatically changes to the frequency set in **Pr.1**.)

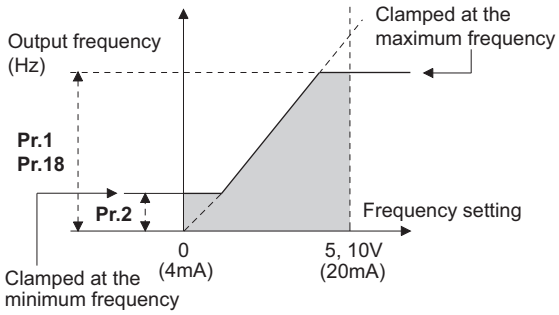

◆Setting the minimum frequency (Pr.2)

- Set **Pr.2 Minimum frequency** to the lower limit of the output frequency.
- If the set frequency is **Pr.2** or less, the output frequency is clamped at **Pr.2** (will not fall below **Pr.2**).

NOTE

- To operate with a frequency higher than 60 Hz using frequency-setting analog signals, change the **Pr.125 (Pr.126) (frequency setting gain) setting.** Simply changing the **Pr.1 and Pr.18** settings does not enable operation at a frequency higher than 60 Hz.
- During PM motor control, the upper and lower limits are for the commanded frequency.
- When **Pr.15 Jog frequency** setting is equal to or less than **Pr.2** setting, the **Pr.15** setting has precedence over the **Pr.2** setting.
- If a jump frequency that exceeds **Pr.1(Pr.18) Maximum frequency** is set for the 3-point frequency jump, the maximum frequency setting is the set frequency. If the set frequency is less than the jump frequency **Pr.2 Minimum frequency**, the jump frequency is the set frequency. (The set frequency can be equal to or lower than the frequency lower limit.) When stall prevention is activated to decrease the output frequency, the output frequency may drop to **Pr.2** or below.

Caution

- **Note that when Pr.2 is set to any value equal to or higher than Pr.13 Starting frequency, simply turning ON the start signal will run the motor at the frequency set in Pr.2 even if the command frequency is not input.**

Parameters referred to

Pr.13 Starting frequency page 197, page 198

Pr.15 Jog frequency page 221

Pr.125 Terminal 2 frequency setting gain frequency, Pr.126 Terminal 4 frequency setting gain frequency page 314

5.7.10 Avoiding the mechanical resonance points (frequency jump)

When it is desired to avoid resonance attributable to the natural frequency of a mechanical system, these parameters allow resonant frequencies to be jumped.

Pr.	Name	Initial value	Setting range	Description
31 H420	**Frequency jump 1A**	9999	0 to 590 Hz, 9999	1A to 1B, 2A to 2B, 3A to 3B are frequency jumps. (3-point jump) 9999: Function disabled
32 H421	**Frequency jump 1B**			
33 H422	**Frequency jump 2A**			
34 H423	**Frequency jump 2B**			
35 H424	**Frequency jump 3A**			
36 H425	**Frequency jump 3B**			
552 H429	**Frequency jump range**	9999	0 to3 (0 Hz)	Set the jump range for the frequency jumps (6-point jump).
			9999	3-point jump

◆3-point frequency jump (Pr.31 to Pr.36)

- Up to three areas may be set, with the jump frequencies set to either the top or bottom point of each area.
- The settings of frequency jumps 1A, 2A, 3A are jump points, and operation is performed at these frequencies in the jump areas.

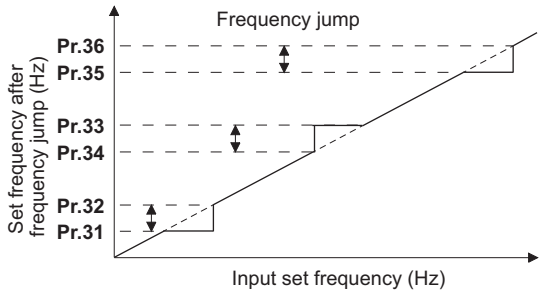

- [Example 1] To fix the frequency to 30 Hz in the range of 30 Hz to 35 Hz, set 35 Hz in **Pr.34** and 30 Hz in **Pr.33**.

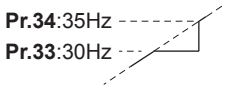

- [Example 2] To jump the frequency to 35 Hz in the range of 30 Hz to 35 Hz, set 35 Hz in **Pr.33** and 30 Hz in **Pr.34**.

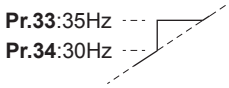

◆6-point frequency jump (Pr.552)

- A total of six jump areas can be set by setting the common jump range for the frequencies set in **Pr.31 to Pr.36**.
- When frequency jump ranges overlap, the lower limit of the lower jump range and the upper limit of the upper jump range are used.
- When the set frequency decreases and falls within the jump range, the upper limit of the jump range is the set frequency. When the set frequency increases and falls within the jump range, the lower limit of the jump range is the set frequency.

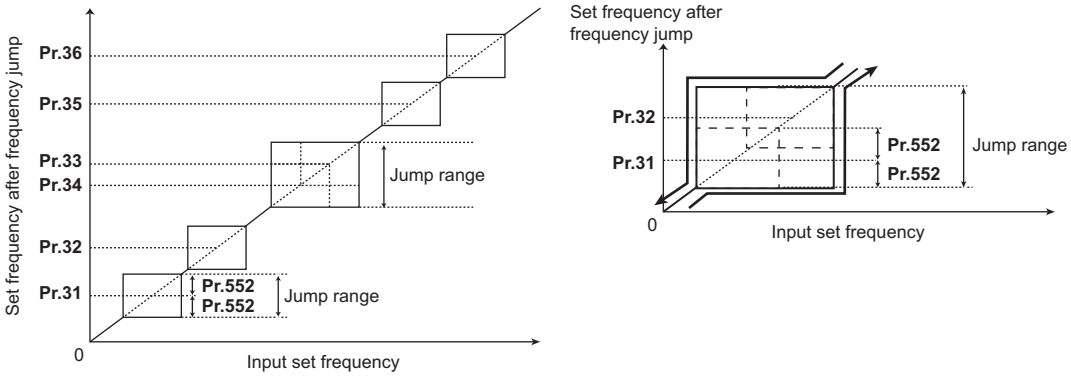

NOTE

- During acceleration/deceleration, the running frequency within the set area is valid.
- If the setting ranges of individual groups (1A and 1B, 2A and 2B, 3A and 3B) overlap, write disable error (Er1) will occur.
- Setting **Pr.552** = "0" disables frequency jumps.
- If a jump frequency that exceeds **Pr.1(Pr.18) Maximum frequency** is set for the 3-point jump, the maximum frequency setting is the set frequency. If the set frequency is less than the jump frequency **Pr.2 Minimum frequency**, the jump frequency is the set frequency. (The set frequency can be equal to or lower than the frequency lower limit.)
  Example with 6-point frequency jump

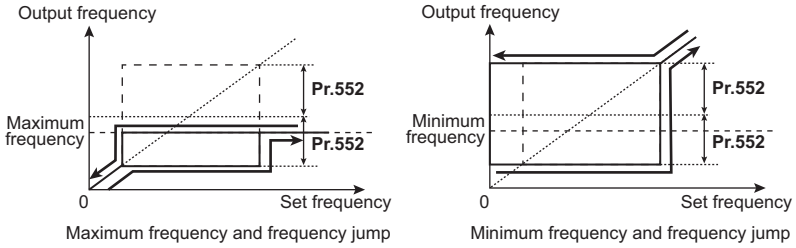

Parameters referred to

Pr.1 Maximum frequency, Pr.18 High speed maximum frequency, Pr.2 Minimum frequency ☞ page 245

5.7.11 Stall prevention operation

This function monitors the output current and automatically changes the output frequency to prevent the inverter from tripping due to overcurrent, overvoltage, etc. It can also limit the stall prevention and fast-response current limit operation during acceleration/deceleration and power/regenerative driving.

- Stall prevention
  If the output current exceeds the stall prevention operation level, the output frequency of the inverter is automatically changed to reduce the output current.
  Also the second stall prevention function can limit the output frequency range in which the stall prevention function is enabled.
- Fast-response current limit
  If the current exceeds the limit value, the output of the inverter is shut off to prevent an overcurrent.

Pr.	Name	Initial value		Setting range	Description	
		FM	CA			
22 **H500**	**Stall prevention operation level**	120%	110%	0	Stall prevention operation disabled.	
				0.1 to 400% *1	Set the current limit at which the stall prevention operation will start.	
156 **H501**	**Stall prevention operation selection**	0		0 to 31, 100 to 101	Enable/disable the stall prevention operation and the fast-response current limit operation.	
48 **H600** V/F Magnetic flux	**Second stall prevention operation level**	120%	110%	0	Second stall prevention operation disabled.	
				0.1 to 400% *1	The stall prevention operation level can be changed using the RT signal.	
49 **H601** V/F Magnetic flux	**Second stall prevention operation frequency**	0 Hz		0	Second stall prevention operation disabled.	
				0.01 to 590 Hz	Set the frequency at which the **Pr.48** stall prevention operation will start.	
				9999	**Pr.48** is enabled when RT signal is ON.	
23 **H610** V/F Magnetic flux	**Stall prevention operation level compensation factor at double speed**	9999		0 to 200%	The stall operation level when running at high speeds above the rated frequency can be reduced.	
				9999	Stall prevention operation disabled at double speed.	
66 **H611** V/F Magnetic flux	**Stall prevention operation reduction starting frequency**	60 Hz	50 Hz	0 to 590 Hz	Set the frequency at which the stall operation level reduction will start.	
148 **H620** V/F Magnetic flux	**Stall prevention level at 0 V input**	120%	110%	0 to 400% *1	The stall prevention operation level can be changed by the analog signal input to the terminal 1 (terminal 4).	
149 **H621** V/F Magnetic flux	**Stall prevention level at 10 V input**	150%	120%	0 to 400% *1		
154 **H631** V/F Magnetic flux	**Voltage reduction selection during stall prevention operation**	1		0	Output voltage reduction enabled.	Enable/disable the output voltage reduction during stall prevention operation.
				1	Output voltage reduction disabled.	
				10	Output voltage reduction enabled.	Use this setting when the overvoltage protective function (E.OV[ ]) activates during stall prevention operation in an application with large load inertia.
				11	Output voltage reduction disabled.	
157 **M430**	**OL signal output timer**	0 s		0 to 25 s	Set the OL signal output start time when stall prevention is activated.	
				9999	No OL signal output.	
858 **T040**	**Terminal 4 function assignment**	0		0, 4, 9999	When set "4", the stall prevention level can be changed with the signal to the terminal 4.	
868 **T010**	**Terminal 1 function assignment**	0		0, 4, 9999	When set "4", the stall prevention level can be changed with the signal to the terminal 1.	
874 **H730** PM	**OLT level setting**	120%	110%	0 to 400%	A trip can be set for when the stall prevention is activated and the motor stalls. Set the output at which to activate the trip.	

*1 The upper limit of stall prevention operation is limited internally to the following.
120% (SLD rating), 150% (LD rating)

◆Setting the stall prevention operation level (Pr.22)

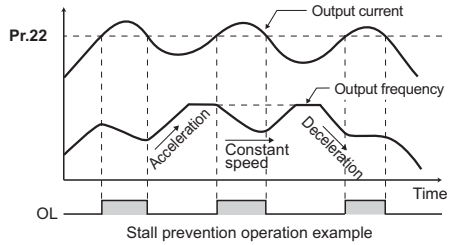

Stall prevention operation example

- For **Pr.22 Stall prevention operation level**, set the ratio of the output current to the inverter's rated current at which the stall prevention operation will be activated. Normally, use this parameter in the initial setting.
- Stall prevention operation stops acceleration (makes deceleration) during acceleration, makes deceleration during constant speed, and stops deceleration during deceleration.
- When the stall prevention operation is performed, the Overload warning (OL) signal is output.

NOTE

- A continuous overloaded condition may activate a protective function such as motor overload trip (electronic thermal O/L relay function) (E.THM).
- When **Pr.156** has been set to activate the fast response current limit (initial value), the **Pr.22** setting should not be higher than 140%. Such setting will prevent torque generation
- Under PM motor control, the stall prevention operation level is reduced inversely proportional to the output frequency in the constant output range of the rated motor frequency or higher.

◆Disabling the stall prevention operation and fast-response current limit according to operating conditions (Pr.156)

• Referring to the table below, enable/disable the stall prevention operation and the fast-response current limit operation, and also set the operation at OL signal output.

Pr.156 setting		Fast response current limit ○: enabled ●: disabled	Stall prevention operation selection ○: enabled ●: disabled			OL signal output ○: operation continued ●: operation stopped*1
			Acceleration	Constant speed	Deceleration	
0 (initial value)		○	○	○	○	○
1		●	○	○	○	○
2		○	●	○	○	○
3		●	●	○	○	○
4		○	○	●	○	○
5		●	○	●	○	○
6		○	●	●	○	○
7		●	●	●	○	○
8		○	○	○	●	○
9		●	○	○	●	○
10		○	●	○	●	○
11		●	●	○	●	○
12		○	○	●	●	○
13		●	○	●	●	○
14		○	●	●	●	○
15		●	●	●	●	—*2
100 *3	Power driving	○	○	○	○	○
	Regenerative driving	●	●	●	●	—*2

Pr.156 setting		Fast response current limit ○: enabled ●: disabled	Stall prevention operation selection ○: enabled ●: disabled			OL signal output ○: operation continued ●: operation stopped*1
			Acceleration	Constant speed	Deceleration	
16		○	○	○	○	●
17		●	○	○	○	●
18		○	●	○	○	●
19		●	●	○	○	●
20		○	○	●	○	●
21		●	○	●	○	●
22		○	●	●	○	●
23		●	●	●	○	●
24		○	○	○	●	●
25		●	○	○	●	●
26		○	●	○	●	●
27		●	●	○	●	●
28		○	○	●	●	●
29		●	○	●	●	●
30		○	●	●	●	●
31		●	●	●	●	—*2
101 *3	Power driving	●	○	○	○	○
	Regenerative driving	●	●	●	●	—*2

*1 When "operation stop at OL signal output" is selected, the fault output "E. OLT" (stop due to stall prevention) is displayed, and operation stops.

*2 The OL signal and E.OLT are not outputted because fast-response current limit and stall prevention are not operating.

*3 Setting values "100, 101" can be individually set for power driving and regenerative driving. The setting value "101" disables the fast-response current limit during power driving.

NOTE

• When the load is heavy or the acceleration/deceleration time is short, stall prevention operates and acceleration/deceleration may not be performed according to the time set. In such case, set the **Pr.156** and the stall prevention operation level to the optimum values.

• For lift applications, make settings to disable the fast-response current limit. Otherwise, the torque may be insufficient, causing the load to drop.

◆Adjusting the stall prevention operation signal output and output timing (OL signal, Pr.157)

- If the output current exceeds the stall prevention operation level and stall prevention is activated, Overload warning (OL) signal will turn ON for 100 ms or more. The output signal turns OFF when the output current falls to the stall prevention operation level or less.
- **Pr.157 OL signal output timer** can set whether to output the OL signal immediately, or to output it after a certain time period.
- This function also operates during regeneration avoidance operation oL (overvoltage stall).

Pr.157 setting	Description
0 (initial value)	Output immediately.
0.1 to 25	Output after the set time (s).
9999	Not output.

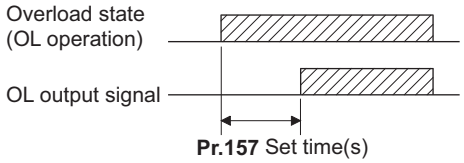

NOTE

- OL signal is assigned to the terminal OL in the initial status. The OL signal can be assigned to other terminals by setting "3 (positive logic) or 103 (negative logic)" in any of **Pr.190 to Pr.196 (output terminal function selection)**.
- If the stall prevention operation has lowered the output frequency to 0.5 Hz and kept the level for 3 s, the stall prevention stop (E.OLT) is activated to shut off the inverter output.
- Changing the terminal assignment using **Pr.190 to Pr.196 (output terminal function selection)** may affect the other functions. Set parameters after confirming the function of each terminal.

Setting for stall prevention operation in the high-frequency range (Pr.22, Pr.23, Pr.66) V/F Magnetic flux

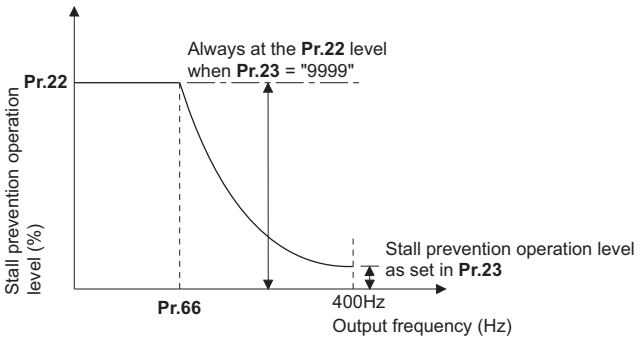

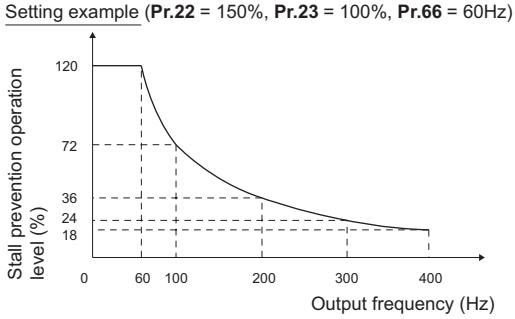

- When operating at the rated motor frequency or higher, acceleration may not be made because the motor current does not increase. Also, when operating in the high-frequency range, the current flowing to the locked motor becomes less than the rated output current of the inverter; and even if the motor is stopped, the protective function will not operate (OL).
  In a case like this, the stall prevention level can be reduced in the high-frequency range to improve the motor's operating characteristics. This is useful when operating up to the high speed range, such as when using a centrifuge. Normally, set **Pr.66 Stall prevention operation reduction starting frequency** to 60 Hz, and **Pr.23 Stall prevention operation level compensation factor at double speed** to 100%.
- Calculation formula for stall prevention operation level

$$\text{Stall prevention operation level (\%) in the high-frequency range} = A + B \times \left[\frac{\textbf{Pr.22} - A}{\textbf{Pr.22} - B}\right] \times \left[\frac{\textbf{Pr.23} - 100}{100}\right]$$

$$\text{Where, } A = \frac{\textbf{Pr.66 (Hz)} \times \textbf{Pr.22(\%)}}{\text{Output frequency (Hz)}}, \quad B = \frac{\textbf{Pr.66 (Hz)} \times \textbf{Pr.22(\%)}}{400\ \text{Hz}}$$

- When **Pr.23** ="9999" (initial value), the stall prevention operation level is constant at the **Pr.22** level up to 590 Hz.

◆Setting multiple stall prevention operation levels (Pr.48, Pr.49)

V/F Magnetic flux

- By setting **Pr.49 Second stall prevention operation frequency** = "9999" and turning ON the RT signal, **Pr.48 Second stall prevention operation level** will be enabled.
- For **Pr.48**, set the stall prevention operation level that is effective in the output frequency range between 0 Hz and **Pr.49**. However, the operation level is **Pr.22** during acceleration.
- Stop-on-contact operation can be used by decreasing the **Pr.48** setting and loosening the reduction torque (torque when stopped).

Pr.49 setting	Operation
0 (initial value)	The second stall prevention function disabled.
0.01 Hz to 590 Hz	The second stall prevention function operates according to the frequency.*1
9999*2	The second stall prevention function operates according to the RT signal. RT signal ON: stall level **Pr.48** RT signal OFF: stall level **Pr.22**

*1 For the stall prevention operation level, the smaller of **Pr.22** and **Pr.48** has precedence.

*2 When **Pr.858** = "4 (analog input to terminal 4 for stall prevention operation level)" or **Pr.868** = "4 (analog input to terminal 1 for stall prevention operation level)", turning ON the RT signal will not enable the second stall prevention function. (Input to the terminal 4 or terminal 1 is valid.)

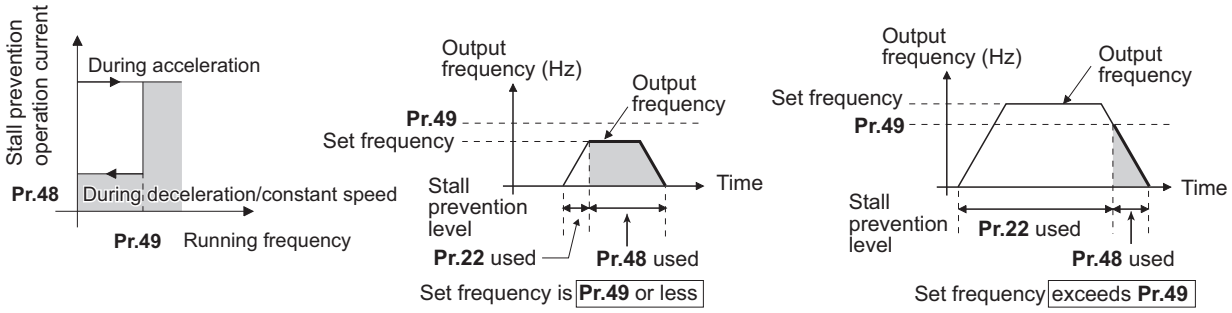

NOTE

- When **Pr.49** ≠ "9999" (level change according to frequency) and **Pr.48** = "0%", the stall prevention function will be disabled at or lower than the frequency set in **Pr.49**.
- The RT signal is assigned to the terminal RT in the initial status. Set "3" in any of **Pr.178 to Pr.189 (input terminal function selection)** to assign the RT signal to another terminal.
- Changing the terminal assignment using **Pr.178 to Pr.189 (input terminal function selection)** may affect the other functions. Set parameters after confirming the function of each terminal.
- The RT signal acts as the second function selection signal and makes the other second functions valid. (Refer to **page 333**.)

◆Stall prevention operation level setting (analog variable) from terminal 1 (terminal 4) (Pr.148, Pr.149, Pr.858, Pr.868) V/F Magnetic flux

- To use the terminal 1 (analog voltage input) to set the stall prevention operation level, set **Pr.868 Terminal 1 function assignment** = "4". Then, input a 0 to 5 V (or 0 to 10 V) to the terminal 1. To choose whether 5 V or 10 V, use **Pr.73 Analog input selection**. In the initial status, **Pr.73** = "1 (initial value)" is set to choose 0 to ±10 V input.
- When setting the stall prevention operation level from terminal 4 (analog current input), set **Pr.858 Terminal 4 function assignment** = "4".
- Input 0 to 20 mA into terminal 4. There is no need to turn ON the AU signal.
- Set **Pr.148 Stall prevention level at 0 V input** to the current limit level when input voltage is 0 V (0 mA).
- Set **Pr.149 Stall prevention level at 10 V input** to the current limit level when input voltage is 10 V/5 V (20 mA).

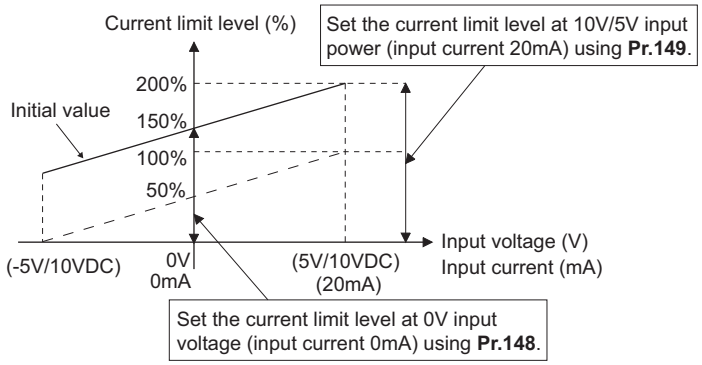

Pr.858 setting	Pr.868 setting	V/F, Advanced magnetic flux vector control	
		Terminal 4 function	Terminal 1 function
0 (initial value)	0 (initial value)	Frequency command (AU signal-ON)	Auxiliary frequency
	4 *1		Stall prevention
	9999		—
4*2	0 (initial value)	Stall prevention	Auxiliary frequency
	4 *1	—*3	Stall prevention
	9999	Stall prevention	—
9999	—	—	—

*1 When **Pr.868** = "4" (analog stall prevention), the other functions for terminal 1 (auxiliary input, override function, PID control) will be disabled.
*2 When **Pr.858** = "4" (analog stall prevention), PID control and speed commands using terminal 4 will not operate, even if the AU signal turns ON.
*3 When both of **Pr.858 and Pr.868** are set to "4" (stall prevention), terminal 1 functions take priority and terminal 4 has no function.

NOTE

- The fast-response current limit cannot be set.
- To change the stall prevention operation level with the analog signal under PM motor control, set **C16 to C19** or **C38 to C41** to calibrate terminal 1 or terminal 4. (Refer to page 320.)

◆To further prevent a trip (Pr.154) V/F Magnetic flux

- When **Pr.154 Voltage reduction selection during stall prevention operation** = "0, 10", the output voltage is reduced. By making this setting, an overcurrent trip becomes less likely to occur. Use this setting when torque reduction does not pose a problem. (Under V/F control, the output voltage is reduced only during the stall prevention operation is activated.)
- Set **Pr.154** = "10, 11" when the overvoltage protective function (E.OV[ ]) activates during stall prevention operation in an application with large load inertia. Note that turning OFF the start signal (STF/STR) or varying the frequency command during stall prevention operation may delay the acceleration/deceleration start.

Pr.154	E.OC[ ] countermeasure	E.OV[ ] countermeasure
0	Effective	—
1 (initial value)	—	—
10	Effective	Effective
11	—	Effective

◆Trip during stall prevention operation (Pr.874)

- The inverter can be set to trip at activation of stall prevention and stalling of the motor.
- When a high load is applied and the stall prevention is activated, the motor stalls. At this time, if the rotation speed is lower than 1.5 Hz and the output torque exceeds the level set in **Pr.874 OLT level setting** and such a state continues for 3 s, stall prevention stop (E.OLT) is activated and the inverter output is shut off.

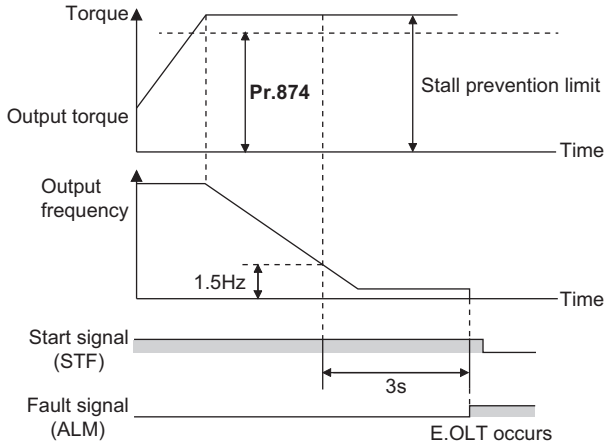

NOTE

- Under V/F control or Advanced magnetic flux vector control, if the output frequency drops to 0.5 Hz due to the stall prevention operation and this state continues for 3 s, a fault indication (E.OLT) appears, and the inverter output is shut off. This operation is activated regardless of the **Pr.874** setting.

⚠ Caution

- **Do not set the stall prevention operation current too low.**
  Doing so will reduce the generated torque.
- **Be sure to perform a test run.**
  Stall prevention operation during acceleration may extend the acceleration time.
  Stall prevention operation during constant-speed operation may cause sudden speed changes.
  Stall prevention operation during deceleration may extend the deceleration time.

Parameters referred to

Pr.73 Analog input selection page 306
Pr.178 to Pr.189 (Input terminal function selection) page 329
Pr.190 to Pr.196 (output terminal function selection) page 288
Pr.858 Terminal 4 function assignment, Pr.868 Terminal 1 function assignment page 310

5.7.12 Load characteristics fault detection

This function is used to monitor whether the load is operating in normal condition by storing the speed/torque relationship in the inverter to detect mechanical faults or for maintenance. When the load operating condition is deviated from the normal range, the protective function is activated or the warning is output to protect the inverter or the motor.

Pr.	Name	Initial value		Setting range	Description
		FM	CA		
1480 H520	Load characteristics measurement mode	0		0	Load characteristics measurement is normally completed.
				1	Load characteristics measurement mode is started.
				2, 3, 4, 5, 81, 82, 83, 84, 85	The load characteristics measurement status is displayed. (Read-only)
1481 H521	Load characteristics load reference 1	9999		0 to 400%	Set the reference value of normal load characteristics. 8888: The present load status is written as reference status. 9999: The load reference is invalid.
1482 H522	Load characteristics load reference 2	9999			
1483 H523	Load characteristics load reference 3	9999			
1484 H524	Load characteristics load reference 4	9999			
1485 H525	Load characteristics load reference 5	9999			
1486 H526	Load characteristics maximum frequency	60 Hz	50 Hz	0 to 590 Hz	Set the maximum frequency of the load characteristics fault detection range.
1487 H527	Load characteristics minimum frequency	6 Hz		0 to 590 Hz	Set the minimum frequency of the load characteristics fault detection range.
1488 H530	Upper limit warning detection width	20%		0 to 400%	Set the detection width when the upper limit warning is output for load faults.
				9999	Function disabled
1489 H531	Lower limit warning detection width	20%		0 to 400%	Set the detection width when the lower limit warning is output for load faults.
				9999	Function disabled
1490 H532	Upper limit fault detection width	9999		0 to 400%	Set the detection width when output is shut off when the upper limit load fault occurs.
				9999	Function disabled
1491 H533	Lower limit fault detection width	9999		0 to 400%	Set the detection width when output is shut off when the lower limit load fault occurs.
				9999	Function disabled
1492 H534	Load status detection signal delay time / load reference measurement waiting time	1 s		0 to 60 s	Set the waiting time after the load fault is detected until warning output or output shutoff. In the load characteristics measurement mode, set the waiting time after the load measurement frequency is reached until the load reference is set.

◆Load characteristics setting (Pr.1481 to Pr.1487)

- Use **Pr.1481 to Pr.1485** to set the reference value of load characteristics.
- Use **Pr.1486 Load characteristics maximum frequency** and **Pr.1487 Load characteristics minimum frequency** to set the output frequency range for load fault detection.

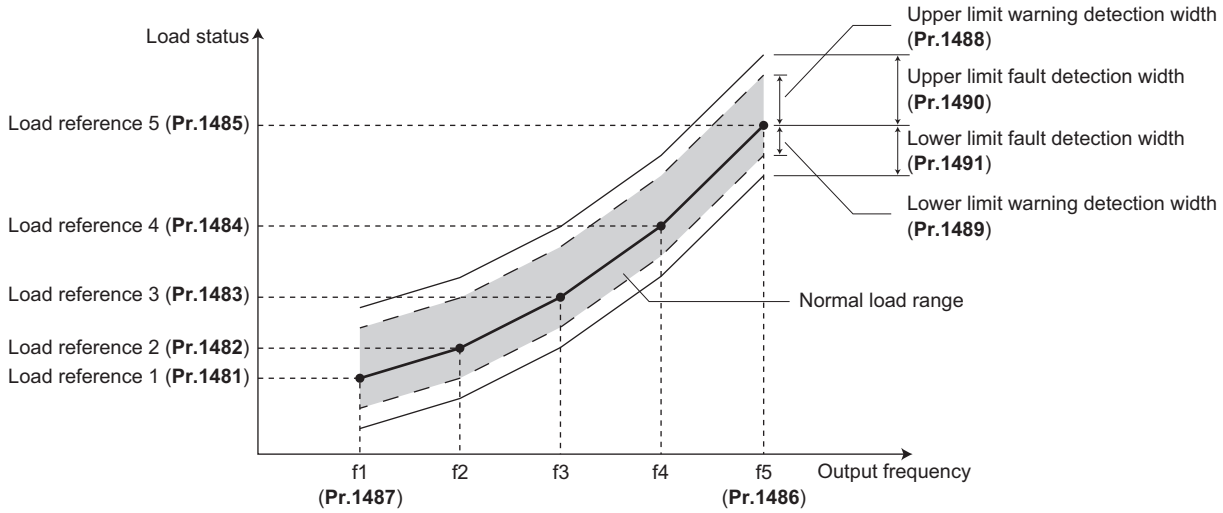

◆Automatic measurement of the load characteristics reference (Load characteristics measurement mode) (Pr.1480)

POINT

- Perform measurement under actual environment with the motor connected.
- Set the **Pr.1487 Load characteristics minimum frequency** higher than the **Pr.13 Starting frequency**.

- Setting **Pr.1480 Load characteristics measurement mode** = "1" enables automatic measurement of the load characteristics reference. (Load characteristics measurement mode)
- Use **Pr.1486 and Pr.1487** to set the frequency band for the measurement, and set **Pr.1480** = "1". When the inverter is started after the setting, the measurement is started.
- The automatically measured load characteristics reference is written in **Pr.1481 to Pr.1485**.
- After the measurement is started, read **Pr.1480** to display the status of the measurement. If "8" appears in the tens place, the measurement has not properly completed.

Read value of Pr.1480		Status
Tens place	Ones place	
—	1	During measurement from the starting point to Point 1
—	2	During measurement from Point 1 to Point 2
—	3	During measurement from Point 2 to Point 3
—	4	During measurement from Point 3 to Point 4
—	5	During measurement from Point 4 to Point 5
—	0	Normal completion
8	1 to 5	Termination of measurement by an activation of a protective function, inverter reset, turning ON of MRS signal, turning OFF of the start command, or timeout. (The value in the ones place represents the above-mentioned measurement point.)

- During automatic measurement, During load characteristics measurement signal (Y213) is output. For the Y213 signal, assign the function by setting "213 (forward action)" or "313 (reverse action)" in any of **Pr.190 to Pr.196 (output terminal function selection)**.
- Setting "8888" in **Pr.1481 to Pr.1485** enables fine adjustment of load characteristics. When setting **Pr.1481 to Pr.1485** = "8888" during operation, the load status at that point is set in the parameter. (Only when the set frequency is within ±2 Hz of the frequency of the measurement point, and SU signal is in the ON state)

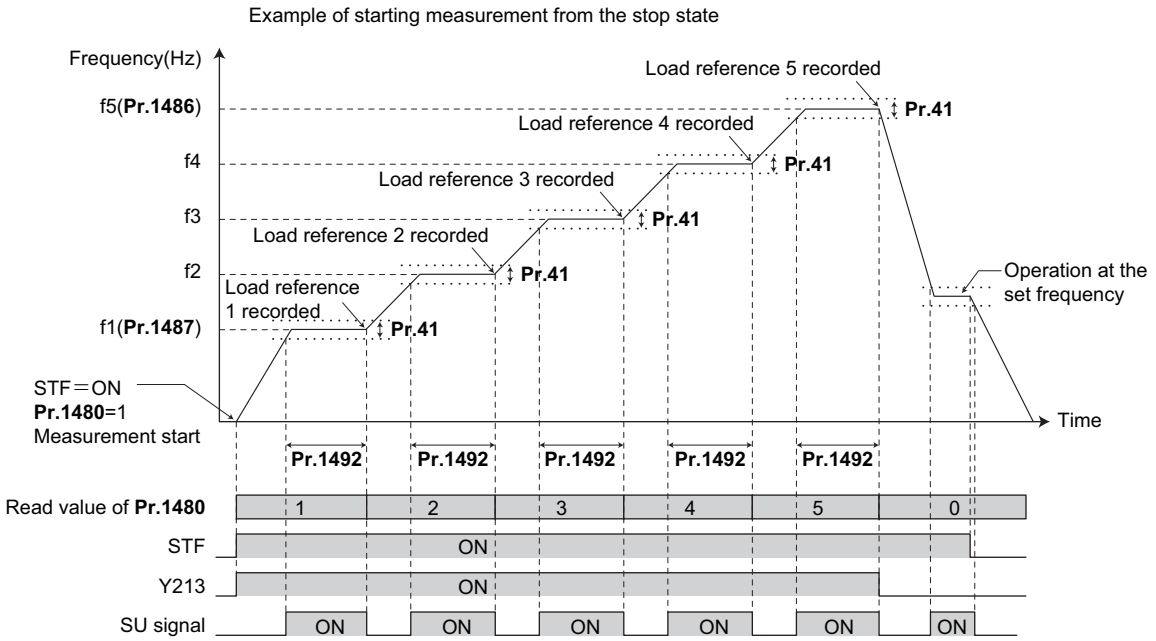

NOTE

- Even if the load measurement is not properly completed, the load characteristics fault is detected based on the load characteristics found by the already-completed portion of the measurement.
- During the load characteristics measurement, the load characteristics fault detection is not performed.
- During the load characteristics measurement, linear acceleration/deceleration is performed even if the S-pattern acceleration/deceleration is set.
- Changing the terminal assignment using **Pr.190 to Pr.196 (output terminal function selection)** may affect the other functions. Set parameters after confirming the function of each terminal.

◆Load fault detection setting (Pr.1488 to Pr.1491)

- When the load is deviated from the detection width set in **Pr.1488 Upper limit warning detection width**, Upper limit warning detection signal (LUP) is output. When the load is deviated from the detection width set in **Pr.1489 Lower limit warning detection width**, Lower limit warning detection signal (LDN) is output. At the same time, Load fault warning (LDF) appears on the operation panel.
- For the LUP signal, assign the function by setting "211 (forward action)" or "311 (reverse action)" in any of **Pr.190 to Pr.196 (output terminal function selection)**. For the LDN signal, assign the function by setting "212 (forward action)" or "312 (reverse action)" in any of **Pr.190 to Pr.196 (output terminal function selection)**.
- When the load is deviated from the detection width set in **Pr.1490 Upper limit fault detection width**, the protective function (E.LUP) is activated and the inverter output is shut off. When the load is deviated from the detection width set in **Pr.1491 Lower limit fault detection width**, the protective function (E.LDN) is activated and the inverter output is shut off.
- To prevent the repetitive on/off operation of the signal due to load fluctuation near the detection range, **Pr.1492 Load status detection signal delay time / load reference measurement waiting time** can be used to set the delay time. Even when a fault is detected out of the detection range once, the warning is not output if the characteristics value returns to the normal range from a fault state within the output delay time.

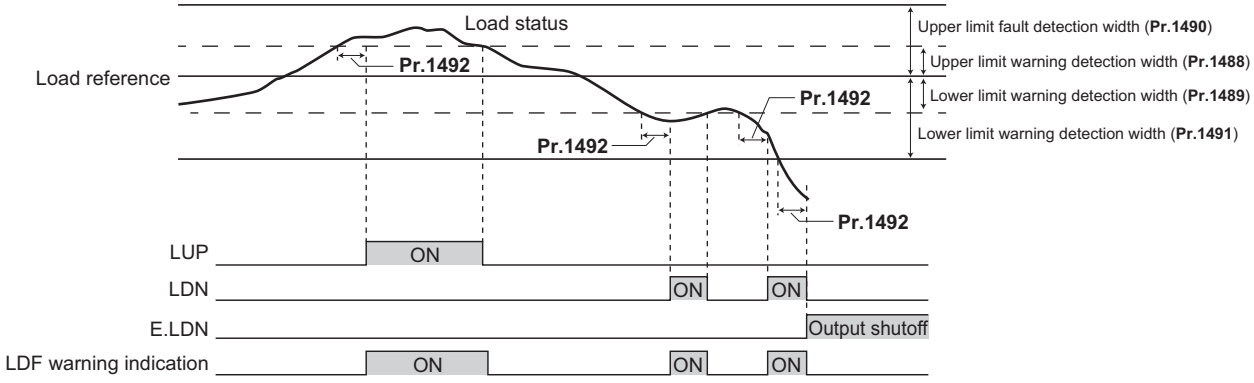

NOTE

- Changing the terminal assignment using **Pr.190 to Pr.196 (output terminal function selection)** may affect the other functions. Set parameters after confirming the function of each terminal.

◆Setting example

- The load characteristics are calculated from the parameter setting and the output frequency.
- A setting example is shown below. The reference value is linearly interpolated from the parameter settings. For example, the reference when the output frequency is 30 Hz is 26%, which is linearly interpolated from values of the reference 2 and the reference 3.

Reference	Frequency	Load reference
Load characteristics reference 1	f1: load characteristics minimum frequency (**Pr.1487**) = 10 Hz	**Pr.1481** = 15%
Load characteristics reference 2	f2 = (f5 - f1)/4 + f1 = 22.5 Hz	**Pr.1482** = 20%
Load characteristics reference 3	f3 = (f5 - f1)/2 + f1 = 35 Hz	**Pr.1483** = 30%
Load characteristics reference 4	f4 = (f5 - f1)×3/4 + f1 = 47.5 Hz	**Pr.1484** = 60%
Load characteristics reference 5	f5: load characteristics maximum frequency (**Pr.1486**) = 60 Hz	**Pr.1485** = 100%

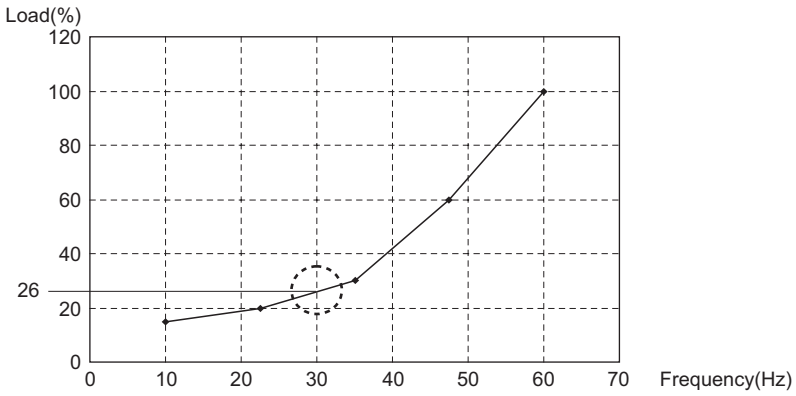

NOTE

- When the load reference is not set for five points, the load characteristics value is determined by linear interpolation of the set load reference values only. If there is only one load reference setting, the set load reference is used as the load reference all through the range.

Parameters referred to

Pr.41 Up-to-frequency sensitivity ☞ page 294

Pr.190 to Pr.196 (output terminal function selection) ☞ page 288

5.7.13 Motor overspeeding detection PM

The Overspeed occurrence (E.OS) is activated when the motor speed exceeds the overspeed detection level. This function prevents the motor from accidentally speeding over the specified value, due to an error in parameter setting, etc.

Pr.	Name	Initial value	Setting range	Description
374 **H800**	**Overspeed detection level**	9999	0 to 590 Hz	If the motor rotation speed exceeds the speed set in **Pr.374** during PM motor control, Overspeed occurrence (E.OS) occurs, and the inverter output is shut off.
			9999	During PM motor control, E.OS occurs when the speed exceeds the "maximum motor frequency + 10 Hz".*1

*1 The maximum motor frequency is set in **Pr.702 Maximum motor frequency**. When **Pr.702** = "9999 (initial value)", the **Pr.84 Rated motor frequency** setting is applied as the maximum motor frequency.

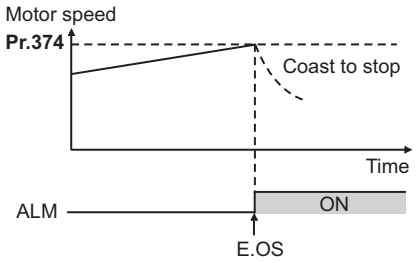

5.8 (M) Monitor display and monitor output signal

Purpose	Parameter to set			Refer to page
To display the motor speed. To set to rotations per minute.	Speed display and rotations per minute setting	P.M000 to P.M002	Pr.37, Pr.144, Pr.505	261
To change the monitored item on the operation panel and the parameter unit	Operation panel monitored item selection, clearing the cumulative monitor	P.M020 to P.M023, P.M030, P.M031, P.M044, P.M050 to P.M052, P.M100 to P.M104	Pr.52, Pr.170, Pr.171, Pr.268, Pr.290, Pr.563, Pr.564, Pr.774 to Pr.776, Pr.891, Pr.992 Pr.1106 to Pr.1108	263
To change the monitored item output from the terminal FM(CA) and AM	Terminal FM(CA) function selection	P.M040 to P.M042, P.M044, P.M300, P.M301, P.D100	Pr.54, Pr.55, Pr.56, Pr.158, Pr.290, Pr.291, Pr.866	273
To adjusting the terminal FM, terminal CA, and AM output	Terminal FM(CA), AM calibration	P.M310, P.M320, P.M321, P.M330 to P.M334	Pr.867, Pr.869, C0(Pr.900), C1(Pr.901), C8(Pr.930) to C11(Pr.931)	279
To check the effects of energy saving	Energy saving monitor	P.M023, P.M100, P.M200 to P.M207, P.M300, P.M301	Pr.52, Pr.54, Pr.158, Pr.891 to Pr.899	283
To assign functions to the output terminals	Output terminal function assignment	P.M400 to P.M406, P.M431	Pr.190 to Pr.196, Pr.289	288
To detect the output frequency	Up-to-frequency sensitivity Output frequency detection Low speed detection	P.M440 to P.M444	Pr.41 to Pr.43, Pr.50, Pr.870	294
To detect the output current	Output current detection Zero current detection	P.M460 to P.M464	Pr.150 to Pr.153, Pr.166, Pr.167	296
To detecting the output torque	Output torque detection	P.M470	Pr.864	298
To use the remote output function	Remote output	P.M500 to P.M502	Pr.495 to Pr.497	298
To use the analog remote output function	Analog remote output	P.M530 to P.M534	Pr.655 to Pr.659	300
To output the fault code from a terminal	Fault code output function	P.M510	Pr.76	302
To detect the specified output power	Pulse train output of output power	P.M520	Pr.799	303
To detect the control circuit temperature	Control circuit temperature monitor	P.M060	Pr.663	304

5.8.1 Speed display and rotations per minute setting

The monitor display unit and the frequency setting on the operation panel can be switched to motor speed and machine speed.

Pr.	Name	Initial value		Setting range	Description
		FM	CA		
37 **M000**	**Speed display**	0		0	Frequency display and setting
				1 to 9998*1	Set the machine speed for **Pr.505**.
505 **M001**	**Speed setting reference**	60 Hz	50 Hz	1 to 590 Hz	Set the reference speed for **Pr.37**.
144 **M002**	**Speed setting switchover**	4		0, 2, 4, 6, 8, 10, 12, 102, 104, 106, 108, 110, 112	Set the number of motor poles when displaying the motor speed.

*1 The maximum value of the setting range differs according to the **Pr.1 Maximum frequency**, **Pr.505 Speed setting reference**, and it can be calculated from the following formula.
The maximum value of **Pr.37** < 65535 × **Pr.505** / **Pr.1** setting value (Hz).
The maximum setting value of **Pr.37** is 9998 if the result of the above formula exceeds 9998.

◆Display in speed (Pr.37, Pr.144)

- Set the number of motor poles (2, 4, 6, 8, 10, 12) for **Pr.144**, or the number of motor poles + 100 (102, 104, 106, 108, 110, 112) to display the motor speed.
- The **Pr.144** setting will change automatically when setting the motor poles with **Pr.81 Number of motor poles**. **Pr.81** will not automatically change when **Pr.144** is changed.
  Example 1) Changing the initial value of **Pr.81** to "2" will change **Pr.144** from "4" to "2".
  Example 2) When setting **Pr.81** = "2" while **Pr.144** = "104", **Pr.144** will change from "104" to "102".

◆Display in motor speed (Pr.37, Pr.505)

- To display in the machine speed, set **Pr.37** to the machine speed at the frequency set in **Pr.505**.
- For example, when **Pr.505** = "60 Hz" and **Pr.37** = "1000", the running speed monitor will display "1000" at the running speed of 60 Hz.When running frequency is 30 Hz, "500" is displayed.

◆Monitor display (setting) increments

- When both **Pr.37** and **Pr.144** have been set, their priorities are as given below.
  Pr.144 = 102 to 112 > **Pr.37** = 1 to 9998 > **Pr.144** = 2 to 12
- The combination of the **Pr.37** and **Pr.144** settings as shown below determines the setting increment for each monitor. (The initial values are shown within the thick lines.)

Pr.37 Setting	Pr.144 Setting	Output frequency monitor	Set frequency monitor	Running speed monitor	Frequency setting parameter setting
0 (initial value)	0	0.01 Hz	0.01 Hz	1 r/min*1	0.01 Hz
	2 to 12	0.01 Hz	0.01 Hz	1 r/min*1	0.01 Hz
	102 to 112	1 r/min*1	1 r/min *1	1 r/min*1	1 r/min*1
1 to 9998	0	0.01 Hz	0.01 Hz	1 (machine speed*1)	0.01 Hz
	2 to 12	1 (machine speed*1)	1 (machine speed*1)	1 (machine speed*1)	1 (machine speed*1)
	102 to 112	0.01 Hz	0.01 Hz	1 r/min *1	0.01 Hz

*1 Motor speed r/min conversion formula: .... frequency × 120 / number of motor poles **(Pr.144)**
Machine speed conversion formula: ..... **Pr.37** × frequency / **Pr.505**
For **Pr.144** in the above formula, the value is "**Pr.144** - 100" when "102 to 112" is set in **Pr.144**; and the value is "4" when **Pr.37** = 0 and **Pr.144** = 0.
Pr.505 is always set as frequency (Hz).

NOTE

- The inverter's output frequency is displayed as synchronous speed under V/F control. The displayed value is "actual motor speed" + "motor slip." When Advanced magnetic flux vector control or PM motor control is selected, the actual motor speed (estimated value by motor slip calculation) is used.
- When **Pr.37** = "0" and **Pr.144** = "0", the running speed monitor is displayed with the number of motor poles 4. (Displays 1800 r/min at 60 Hz)
- To change the PU main monitor (PU main display), refer to **Pr.52**.
- When using the machine speed display for the parameter unit (FR-PU07), do not change the speed with the up/down key if a set speed above 65535 is being displayed. The set speed may become an undetermined value.
- When the FR-A8ND is connected, the frequency display (setting) will be used regardless of the **Pr.37, Pr.144** settings.

Caution

- **Make sure to set the running speed and the number of motor poles.**
  Otherwise, the motor might run at extremely high speed, damaging the machine.

Parameters referred to

Pr.1 Maximum frequency page 245
Pr.52 Operation panel main monitor selection page 263
Pr.81 Number of motor poles page 143
Pr.800 Control method selection page 143

5.8.2 Monitor indicator selection using operation panel or via communication

The monitored item to be displayed on the operation panel or the parameter unit can be selected.

Pr.	Name	Initial value	Setting range	Description
52 M100	**Operation panel main monitor selection**	0 (output frequency)	0, 5 to 14, 17, 18, 20, 23 to 25, 34, 38, 40 to 45, 50 to 57, 61, 62, 64, 67, 68, 81 to 96, 98, 100	Select the monitor to be displayed on the operation panel and the parameter unit. Refer to page 264 for the monitor description.
774 M101	**Operation panel monitor selection 1**	9999	1 to 3, 5 to 14, 17, 18, 20, 23 to 25, 34, 38, 40 to 45, 50 to 57, 61, 62, 64, 67, 68, 81 to 96, 98, 100, 9999	The output frequency, output current and output voltage monitor that are displayed in monitor mode on the operation panel and the parameter unit can be switched to a specified monitor. 9999: Follows the **Pr.52** setting.
775 M102	**Operation panel monitor selection 2**			
776 M103	**Operation panel monitor selection 3**			
992 M104	**Operation panel setting dial push monitor selection**	0 (Set frequency)	0 to 3, 5 to 14, 17, 18, 20, 23 to 25, 34, 38, 40 to 45, 50 to 57, 61, 62, 64, 67, 68, 81 to 96, 98, 100	Select the monitor to be displayed when the setting dial on the operation panel is pushed.
170 M020	**Watt-hour meter clear**	9999	0	Set "0" to clear the watt-hour meter monitor.
			10	Set the maximum value for monitoring via communication. Set it in the range of 0 and 9999 kWh.
			9999	Set the maximum value for monitoring via communication. Set it in the range of 0 and 65535 kWh.
563 M021	**Energization time carrying-over times**	0	(0 to 65535) (Read-only)	Displays the numbers of times that the cumulative energization time monitor exceeded 65535 h. Read-only.
268 M022	**Monitor decimal digits selection**	9999	0	Displays as integral value.
			1	Displays in 0.1 increments.
			9999	No function
891 M023	**Cumulative power monitor digit shifted times**	9999	0 to 4	Set the number of times to shift the cumulative power monitor digit. The monitor value is clamped at the maximum value.
			9999	No shift Monitor value is cleared when it exceeds the maximum value.
171 M030	**Operation hour meter clear**	9999	0	Set "0" to clear the operation hour monitor.
			9999	The read value is always 9999. Nothing happens when "9999" is set.
564 M031	**Operating time carrying-over times**	0	(0 to 65535) (Read-only)	Displays the numbers of times that the operating time monitor exceeded 65535 h. Read-only.
290 M044	**Monitor negative output selection**	0	0 to 7	Set the availability of output with a minus sign for the terminal AM, the operation panel display, or monitoring via communication. (Refer to page 272)
1106 M050	**Torque monitor filter**	9999	0 to 5 s	The filter time constant is selectable for monitoring of the torque. A larger setting results in slower response.
			9999	0.3 s filter
1107 M051	**Running speed monitor filter**	9999	0 to 5 s	The filter time constant is selectable for monitoring of the running speed. A larger setting results in slower response.
			9999	0.08 s filter
1108 M052	**Excitation current monitor filter**	9999	0 to 5 s	The filter time constant is selectable for monitoring of the motor excitation current. A larger setting results in slower response.
			9999	0.3 s filter

◆Monitor description list (Pr.52, Pr.774 to Pr.776, Pr.992)

- Set the monitor to be displayed on the operation panel and the parameter unit in **Pr.52, Pr.774 to Pr.776, Pr.992**.
- Refer to the following table and set the monitor to be displayed. (The monitor marked —— cannot be selected. ○ in the [Minus (-) display] indicates a display with a minus sign.)

Types of monitor	Unit	Pr.52, Pr.774 to Pr.776, Pr.992	RS-485 communication dedicated monitor (hexadecimal)	Modbus-RTU real time monitor	Minus (-) display	Description
Output frequency/ speed*16	0.01 Hz/1 *15	1/0/100	H01	40201		Displays the inverter output frequency.
Output current *6*8*16	0.01 A/ 0.1 A*5	2/0/100	H02	40202		Displays the inverter output current effective value.
Output voltage*6*16	0.1 V	3/0/100	H03	40203		Displays the inverter output voltage.
Fault display	—	0/100	—	—		Displays 8 past faults individually.
Frequency setting value/speed setting	0.01 Hz/1 *15	5*1	H05	40205		Displays the set frequency
Running speed	1 (r/min)	6*1	H06	40206		Displays the motor speed (by the **Pr.37, Pr.144** settings). (Refer to page 261)
Motor torque	0.1%	7*1	H07	40207	○	Displays motor torque as a percentage (0% under V/F control), considering the rated torque as 100%.
Converter output voltage*6	0.1 V	8*1	H08	40208		Displays the DC bus voltage value.
—	—	9	H09	40209		For manufacturer setteing. Do not set.
Electronic thermal O/L relay load factor	0.1%	10*1	H0A	40210		Displays the motor thermal cumulative value, considering the thermal operation level as 100%.
Output current peak value*6	0.01 A/ 0.1 A*5	11*1	H0B	40211		Saves and displays the output current monitor peak value. (Cleared with each start.)
Converter output voltage peak value*6	0.1 V	12*1	H0C	40212		Saves and displays the DC bus voltage peak value. (Cleared with each start.)
Input power	0.01 kW/ 0.1 kW*5	13*1	H0D	40213		Displays the power at the inverter input side.
Output power*8	0.01 kW/ 0.1 kW*5	14*1	H0E	40214		Displays the power at the inverter output side.
Load meter	0.1%	17	H11	40217		Displays torque current as a percentage, considering **Pr.56** setting value as 100%.
Motor excitation current*6	0.01 A/ 0.1 A*5	18	H12	40218		Displays the motor excitation current
Cumulative energization time*2	1 h	20	H14	40220		Displays the cumulative energization time since the inverter shipment. Check how many times the monitor value exceeded 65535 h with **Pr.563**.
Actual operation time*2*3	1 h	23	H17	40223		Displays the cumulative time since the inverter began running. The number of times the monitor value exceeded 65535 h can be checked with **Pr.564** This can be cleared with **Pr.171.** (Refer to page 271)
Motor load factor	0.1%	24	H18	40224		Displays the output current value as a percentage, considering the inverter rated current value as 100%. Monitor value = output current monitor value / inverter rated current × 100 [%]

Types of monitor	Unit	Pr.52, Pr.774 to Pr.776, Pr.992	RS-485 communication dedicated monitor (hexadecimal)	Modbus-RTU real time monitor	Minus (-) display	Description
Cumulative power*6	0.01 kWh/ 0.1 kWh *4*5	25	H19	40225		Displays the cumulative energy based on the output power monitor. This can be cleared with **Pr.170**. (Refer to page 271.)
Motor output	0.01 kW/ 0.1 kW*5	34	H22	40234		Multiplies the output torque at that time with the motor speed, and displays the machine output for the motor shaft end.
Trace status	1	38	H26	40238		Displays the trace status. (Refer to page 433)
PLC function user monitor 1	According to the SD1215 setting	40	H28	40240		Displays the arbitrary monitoring item using the PLC function. Displays the following special register values. SD1216: Displays in No.40 SD1217: Displays in No.41 SD1218: Displays in No.42 (Refer to the PLC Function Programming Manual.)
PLC function user monitor 2		41	H29	40241		
PLC function user monitor 3		42	H2A	40242		
Station number (RS-485 terminals)	1	43	H2B	40243		Displays which station number (0 to 31) can currently be used for communication from the RS-485 terminal block.
Station number (PU)	1	44	H2C	40244		Displays which station number (0 to 31) can currently be used for communication from the PU connector.
Station number (CC-Link)	1	45	H2D	40245		Displays which station number (0 to 31) can currently be used for CC-Link communication. Displays "0" when the FR-A8NC is not connected.
Energy saving effect	Changeable by parameter setting.	50	H32	40250		Displays the energy saving effect monitor. Conversion to power saving, average power saving, price display, and percentage display can be done using parameters. (Refer to page 283.)
Cumulative energy saving		51	H33	40251		
PID set point	0.1%	52	H34	40252		Displays the set point, measured value, and deviation under PID control. (Refer to page 389)
PID measured value	0.1%	53	H35	40253		
PID deviation	0.1%	54	H36	40254	o	
Input terminal status	—	55*17	H0F*10	40215*10		Displays input terminal ON/OFF state of the inverter. (Refer to page 270 for DU display.)
Output terminal status	—		H10*11	40216*11		Displays output terminal ON/OFF state of the inverter. (Refer to page 270 for DU display.)
Option input terminal status*9	—	56 —	—	—		Displays input terminal ON/OFF state of the digital input option (FR-A8AX) on the DU. (Refer to page 270 for details.)
Option output terminal status*9	—	57 —	—	—		Displays output terminal ON/OFF state of the digital output option (FR-A8AY) and the relay output option (FR-A8AR) on the DU. (Refer to page 270 for details.)
Option input terminal status 1 (for communication)*9	—	—	H3A*12	40258*12		Input terminal X0 to X15 ON/OFF state of the digital input option (FR-A8AX) can be monitored via RS-485 communication and the communication option.

(M) Monitor display and monitor output signal

Types of monitor	Unit	Pr.52, Pr.774 to Pr.776, Pr.992	RS-485 communication dedicated monitor (hexadecimal)	Modbus-RTU real time monitor	Minus (-) display	Description
Option input terminal status 2 (for communication)*9	—	—	H3B*13	40259*13		Input terminal DY ON/OFF state of the digital input option (FR-A8AX) can be monitored via RS-485 communication and the communication option.
Option output terminal status 1 (for communication)*9	—	—	H3C*14	40260*14		Output terminal ON/OFF state of the digital output option (FR-A8AY) and relay output option (FR-A8AR) can be monitored via RS-485 communication and the communication option.
Motor thermal load factor	0.1%	61	H3D	40261		Displays the accumulated heat value of the motor thermal O/L relay. The motor overload trip (E.THM) occurs at 100%.
Inverter thermal load factor	0.1%	62	H3E	40262		Displays the accumulated heat value of the inverter thermal O/L relay. The inverter overload trip (E.THT) occurs at 100%.
PTC thermistor resistance	0.01 kΩ	64	H40	40264		Displays the PTC thermistor resistance when **Pr.561 PTC thermistor protection level** ≠ 9999 (voltage monitor when **Pr.561** = 9999).
PID measured value 2	0.1%	67	H43	40267		Displays the PID control measured value even when PID control is disabled. (Refer to **page 389**)
Emergency drive status *7	1	68	H44	40268		Displays the emergency drive status (Refer to **page 238**)
32-bit cumulative power (lower 16 bits)	1 kWh	—	H4D	40277		Displays the 32-bit cumulative power value in multiplies of 16 bits. Monitoring can be performed via RS-485 communication and communication options. (To find the monitor codes for each communication option, refer to the Instruction Manual of each communication option.)
32-bit cumulative power (upper 16 bits)	1 kWh	—	H4E	40278		
32-bit cumulative power (lower 16 bits)	0.01 kWh/ 0.1 kWh*5	—	H4F	40279		
32-bit cumulative power (upper 16 bits)	0.01 kWh/ 0.1 kWh*5	—	H50	40280		
BACnet reception status	1	81	H51	40281		Displays the BACnet reception status.
BACnet token pass counter	1	82	H52	40282		Displays the count of received token.
BACnet valid APDU counter	1	83	H53	40283		Displays the count of valid APDU detection.
BACnet communication error counter	1	84	H54	40284		Displays the count of communication error detection.
BACnet terminal FM/CA output level	0.1%	85	H55	40285		Displays the value set in the Analog Output object (ID=0: Terminal FM/CA) for BACnet communication.
BACnet terminal AM output level	0.1%	86	H56	40286	O	Displays the value set in the Analog Output object (ID=1: Terminal AM) for BACnet communication. (A display without signs displays negative values as absolute values.)

Types of monitor	Unit	Pr.52, Pr.774 to Pr.776, Pr.992	RS-485 communication dedicated monitor (hexadecimal)	Modbus-RTU real time monitor	Minus (-) display	Description
Remote output value 1	0.1%	87	H57	40287	O	Displays the setting values of **Pr.656 to Pr.659** (analog remote output). (Refer to **page 300**.)
Remote output value 2	0.1%	88	H58	40288		
Remote output value 3	0.1%	89	H59	40289		
Remote output value 4	0.1%	90	H5A	40290		
PID manipulated variable	0.1%	91	H5B	40291	O	Displays the PID control manipulated amount. (Refer to **page 389**)
Second PID set point	0.1%	92	H5C	40292		Displays the set point, measured value, and deviation under second PID control. (Refer to **page 389**)
Second PID measured value	0.1%	93	H5D	40293		
Second PID deviation	0.1%	94	H5E	40294	O	
Second PID measured value 2	0.1%	95	H5F	40295		Displays the second PID control measured value even when the second PID control is disabled.(Refer to **page 389**)
Second PID manipulated variable	0.1%	96	H60	40296	O	Displays the second PID control manipulated amount. (Refer to **page 389**)
Control circuit temperature	1°C	98	H62	40298	O	Displays the temperature of the control circuit board. Without minus sign: 0 to 100°C With minus sign: -20 to 100°C

(M) Monitor display and monitor output signal

∗1 When using the item as the main monitor data on the LCD operation panel (FR-LU08) or the parameter unit (FR-PU07), use **Pr.774 to Pr.776** or the monitor function of the FR-LU08 or the FR-PU07 for setting.

∗2 The cumulative energization time and actual operation time are accumulated from 0 to 65535 hours, then cleared, and accumulated again from 0.

∗3 The actual operation time does not increase if the cumulative running time before power OFF is less than an hour.

∗4 When using the parameter unit (FR-PU07), "kW" is displayed.

∗5 Differs according to capacities. (FR-F820-02330(55K) or lower, FR-F840-01160(55K) or lower /FR-F820-03160(75K) or higher, FR-F840-01800(75K) or higher)

∗6 Since the voltage and current display on the operation panel (FR-DU08) is shown in four digits, a monitor value of more than "9999" is displayed as "----".

∗7 The setting is available only for standard models.

∗8 When the output current is less than the specified current level (5% of the rated inverter current), the output current is monitored as 0 A. Therefore, the monitored value of an output current and output power may be displayed as "0" when using a much smaller-capacity motor compared to the inverter or in other instances that cause the output current to fall below the specified value.

∗9 Available when the plug-in option is connected.

∗10 Input terminal monitor details ("1" denotes terminal ON, "0" denotes terminal OFF, and "—" denotes undetermined value.)

b15															b0
—	—	—	—	CS	RES	STP (STOP)	MRS	JOG	RH	RM	RL	RT	AU	STR	STF

∗11 Output terminal monitor details ("1" denotes terminal ON, "0" denotes terminal OFF, and "—" denotes undetermined value.)

b15															b0
—	—	—	—	—	—	—	—	SO	ABC2	ABC1	FU	OL	IPF	SU	RUN

∗12 Option input terminal monitor 1 details (FR-A8AX input terminal status, "1" denotes terminal ON and "0" denotes terminal OFF.) —— All are OFF when the option is not connected.

b15															b0
X15	X14	X13	X12	X11	X10	X9	X8	X7	X6	X5	X4	X3	X2	X1	X0

∗13 Option input terminal monitor 2 details (FR-A8AX input terminal status. "1" denotes terminal ON, "0" denotes terminal OFF, "—" denotes undetermined value.) —— All are OFF when the option is not connected.

b15															b0
—	—	—	—	—	—	—	—	—	—	—	—	—	—	—	DY

∗14 Option output terminal monitor details (FR-A8AY/A8AR output terminal status. "1" denotes terminal ON, "0" denotes terminal OFF, and "—" denotes undetermined value.)—— All are OFF when the option is not connected.

b15															b0
—	—	—	—	—	—	RA3	RA2	RA1	Y6	Y5	Y4	Y3	Y2	Y1	Y0

∗15 The increment is 1 when **Pr.37** = "1 to 9998" or when **Pr.144** = "2 to 12" or "102 to 112". (Refer to **page 261**.)

∗16 The monitored values are retained even if an inverter fault occurs. Resetting will clear the retained values.

∗17 Parameter setting is not available for setting the item as the main monitor data on the LCD operation panel (FR-LU08) or the parameter unit (FR-PU07). Use the monitor function of the FR-LU08 or the FR-PU07 for setting.

◆Monitor display for operation panel (Pr.52, Pr.774 to Pr.776)

- When Pr.52 = "0" (initial value), the monitoring of output frequency, output current, output voltage and fault display can be selected in sequence by pressing SET.
- The Load meter, Motor excitation current and Motor load factor are displayed on the second monitor (output current) position, among the monitors set in **Pr.52**. Other monitors are displayed in the third monitor (output voltage) position.
- The monitor displayed at power ON is the first monitor (the output frequency monitor, according to the initial value). Display the monitor that will be the first monitor, and continue pressing SET for 1 s. (To return to the output frequency monitor, display the output frequency monitor and press SET for 1 s.)

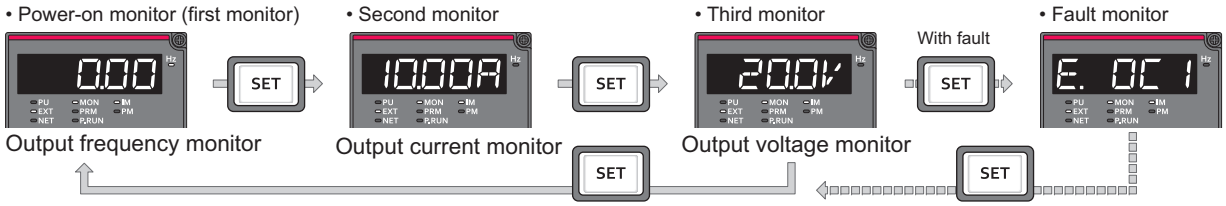

- For example, when **Pr.52** = "20" (cumulative energization time), the monitor is displayed on the operation panel as shown below.

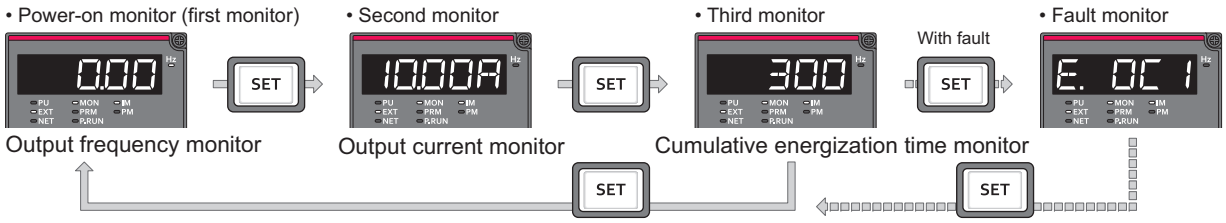

- **Pr.774** sets the output frequency monitor, **Pr.775** sets the output current monitor, and **Pr.776** sets the monitor description to be displayed at the output voltage monitor position. When **Pr.774 to Pr.776** = "9999" (initial value), the **Pr.52** setting value is used.

NOTE

- On the operation panel (FR-DU08), the "Hz" unit indicator is lit while displaying the output frequency, the "Hz" flickers when displaying the set frequency.

◆Displaying the set frequency during stop (Pr.52)

- When **Pr.52** = "100", the set frequency is displayed during stop, and output frequency is displayed during running. (LED of Hz flickers during stop and is lit during operation.)

Pr.52 setting	Status	Output frequency	Output current	Output voltage	Fault or alarm indication
0	During running/stop	Output frequency	Output current	Output voltage	Fault or alarm indication
100	During stop	Set frequency*1			
	Running	Output frequency			

*1 Displays the frequency that is output when the start command is ON. The value considers the maximum/minimum frequency and frequency jumps. It is different from the frequency setting displayed when **Pr.52** = "5".

NOTE

- During an error, the output frequency at error occurrence appears.
- During output shutoff by the MRS signal, the values displayed are the same as during a stop.
- During offline auto tuning, the tuning state monitor takes priority.

◆Operation panel setting dial push display (Pr.992)

- Use **Pr.992** to select the monitor that appears when the setting dial on the operation panel (FR-DU08) is pushed.
- When **Pr.992** = "0 (initial value)", keep pressing the setting dial when in PU operation mode or External/PU combined operation mode 1 (**Pr.79 Operation mode selection** = "3") to show the presently set frequency.
- When **Pr.992** = "100", the set frequency is displayed during stop, and output frequency is displayed during running.

Pr.992 setting	Status	Monitor displayed by the setting dial push
0	During running/stop	Set frequency (PU direct-in frequency)
100	During stop	Set frequency*1
	Running	Output frequency

*1 Displays the frequency that is output when the start command is ON. The value considers the maximum/minimum frequency and frequency jumps. It is different from the frequency setting displayed when **Pr.992** = "5".

◆Operation panel (FR-DU08) I/O terminal monitor (Pr.52)

- When **Pr.52** = "55 to 57", the I/O terminal state can be monitored on the operation panel (FR-DU08).
- The output terminal monitor is displayed on the third monitor.
- The LED is ON when the terminal is ON, and the LED is OFF when the terminal is OFF. The center line of LED is always ON.

Pr.52 setting	Monitor description
55	Displays the I/O terminal ON/OFF state of the inverter.
56*1	Displays input terminal ON/OFF state of the digital input option (FR-A8AX)
57*1	Displays output terminal ON/OFF state of the digital output option (FR-A8AY) or the relay output option (FR-A8AR).

*1 The setting values "56, 57" can be set even if the option is not installed. All are OFF when the option is not connected.

- On the I/O terminal monitor (**Pr.52** = "55"), the upper LEDs denote the input terminal state, and the lower LEDs denote the output terminal state.

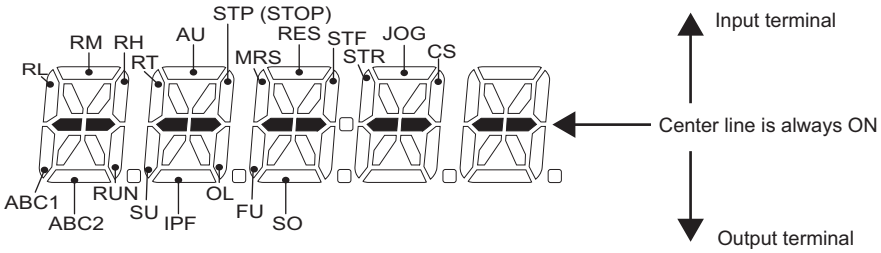

- Display example -
When signals STF, RH and RUN are on

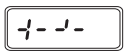

- The decimal point of the first digit on the LED will light for the input option terminal monitor (**Pr.52** = "56").

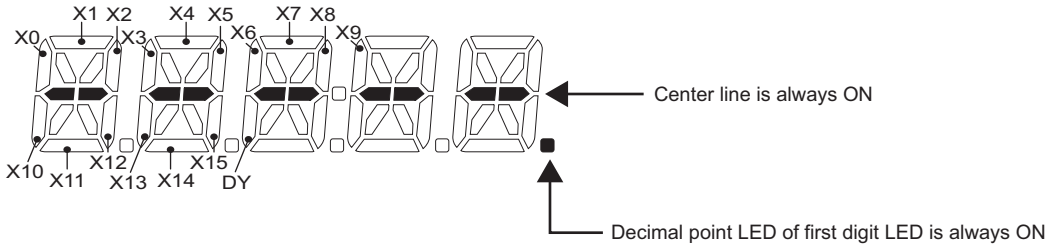

- The decimal point of the second digit on the LED will light for the output option terminal monitor (**Pr.52** = "57").

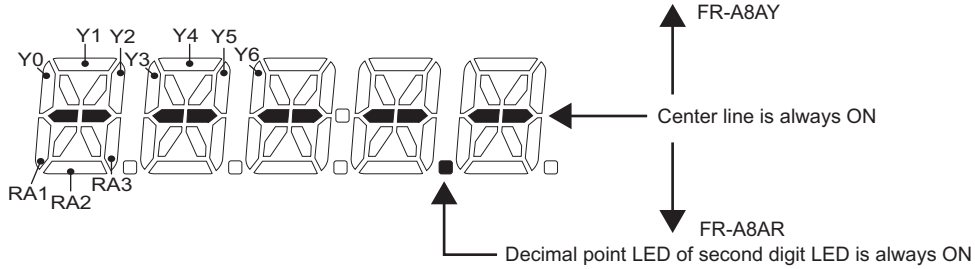

◆Cumulative power monitor and clear (Pr.170, Pr.891)

- On the cumulative power monitor (**Pr.52** = "25"), the output power monitor value is added up and updated in 100 ms increments. (The values are saved in EEPROM every hour.)
- Display increments and display ranges of the operation panel, parameter unit and communication (RS-485 communication, communication option) are as indicated below.

Operation panel, parameter unit*1		Communication		
Range	Unit	Range		Unit
		Pr.170 = 10	Pr.170 = 9999	
0 to 999.99 kWh	0.01 kWh	0 to 9999 kWh	0 to 65535 kWh (initial value)	1 kWh
1000.0 to 9999.9 kWh	0.1 kWh			
10000 to 99999 kWh	1 kWh			

*1 Power is measured in the range of 0 to 99999.99 kWh, and displayed in five digits.When the monitor value exceeds "999.99", a carry occurs, for example "1000.0", so the value is displayed in 0.1 kWh increments.

- The monitor data digit can be shifted to the right by the number of **Pr.891**.
  For example, if the cumulative power value is 1278.56 kWh when **Pr.891** = "2", the operation panel display is 12.78 (display in 100 kWh increments) and the communication data is 12.
- If the maximum value is exceeded at **Pr.891** = "0 to 4", the monitor value is clamped at the maximum value, indicating that a digit shift is necessary. If the maximum value is exceeded at **Pr.891** = "9999", the monitor value returns to 0, and the counting starts again.
- Writing "0" in **Pr.170** clears the cumulative power monitor.

NOTE

- If "0" is written to **Pr.170**, and **Pr.170** is read again, "9999" or "10" is displayed.

◆Cumulative energization time and actual operation time monitor (Pr.171, Pr.563, Pr.564)

- Cumulative energization time monitor (**Pr.52**= "20") accumulates energization time from shipment of the inverter every one hour.
- On the actual operation time monitor (**Pr.52** = "23"), the inverter running time is added up every hour. (Time is not added up during a stop.)
- If the number of monitor value exceeds 65535, it is added up from 0. **Pr.563** allows the user to check how many times the cumulative energization time monitor has exceeded 65535h. **Pr.564** allows the use to check how many times the actual operation time monitor has exceeded 65535h.
- Writing "0" in **Pr.171** clears the actual operation time monitor. (The cumulative energization time monitor cannot be cleared.)

NOTE

- The cumulative energization time does not increase if the power is turned OFF after less than an hour.
- The actual operation time does not increase if the cumulative running time before power OFF is less than an hour.
- If "0" is written to **Pr.171** and **Pr.171** is read again, "9999" is always displayed.Setting "9999" does not clear the actual operation time meter.

◆Hiding the decimal places for the monitors (Pr.268)

- As the operation panel (FR-DU08) display is 5 digits long, the decimal places may vary during analog input, etc. The decimal places can be hidden by selecting the decimal digits with **Pr.268**.

Pr.268 setting	Description
9999 (initial value)	No function
0	For the first or second decimal places (0.1 increments or 0.01 increments) of the monitor, numbers in the first decimal place and smaller are rounded to display an integral value (1 increments). The monitor value equal to or smaller than 0.99 is displayed as 0.
1	When monitoring with the second decimal place (0.01 increments), the 0.01 decimal place is dropped and the monitor displays the first decimal place (0.1 increments). When monitoring with the first decimal place, the display will not change.

NOTE

- The number of display digits on the cumulative energization time (**Pr.52** = "20"), actual operation time (**Pr.52** = "23"), cumulative power (**Pr.52** = "25") and cumulative energy saving (**Pr.52** = "51") does not change.

◆Minus sign display for the monitors (Pr.290)

- Values with minus signs can be output from the terminal AM (analog voltage output) and can be displayed on the operation panel. For a list of the monitors that can output values with minus signs, refer to the monitor description list (on page 264).

Pr.290 setting	Terminal AM output	Operation panel display	Monitoring via communication
0 (initial value)	—	—	—
1	Output with a minus sign	—	—
2	—	Displayed with minus sign.	—
3	Output with a minus sign	Displayed with minus sign.	—
4	—	—	Displayed with minus sign.
5	Output with a minus sign	—	Displayed with minus sign.
6	—	Displayed with minus sign.	Displayed with minus sign.
7	Output with a minus sign	Displayed with minus sign.	Displayed with minus sign.

—: Output without minus sign (positive values only)

NOTE

- When terminal AM (analog voltage output) is "output with a minus sign", the output will be within the -10V DC to +10V DC range. Connect the meter with which output level is matched.
- Parameter unit (FR-PU07) displays only positive values.

◆Monitor filter (Pr.1106 to Pr.1108)

- The response level (filter time constant) of the following monitor indicators can be adjusted.

Pr.	Monitor number	Monitor indicator name
1106	7	Motor torque
	17	Load meter
	32	Torque command
	33	Torque current command
1107	6	Running speed
1108	18	Motor excitation current

Parameters referred to

Pr.30 Regenerative function selection page 508

Pr.37 motor speed display, Pr.144 Speed setting switchover page 261

Pr.55 Frequency monitoring reference, Pr.56 Current monitoring reference, Pr.866 Torque monitoring reference page 273

5.8.3 Monitor display selection for terminals FM/CA and AM

The monitored statuses can be output as the following items: analog voltage (terminal AM), pulse train (terminal FM) for the FM-type inverter, analog current (terminal CA) for the CA-type inverter.
The signal (monitored item) to be output to terminal FM/CA and terminal AM can be selected.

Pr.	Name	Initial value		Setting range	Description	
		FM	CA			
54 **M300**	**FM/CA terminal function selection**	1 (output frequency)		1 to 3, 5 to 14, 17, 18, 21, 24, 34, 50, 52, 53, 61, 62, 67, 70, 85, 87 to 90, 92, 93, 95, 98	Select the monitored item to be output to the terminal FM and terminal CA.	
158 **M301**	**AM terminal function selection**			1 to 3, 5 to 14, 17, 18, 21, 24, 34, 50, 52 to 54, 61, 62, 67, 70, 86 to 96, 98	Select the monitored item to be output to the terminal AM.	
55 **M040**	**Frequency monitoring reference**	60 Hz	50 Hz	0 to 590 Hz	Set the full-scale value when outputting the frequency monitor value to terminals FM, CA and AM.	
56 **M041**	**Current monitoring reference**	Inverter Rated current		0 to 500 A*1	Set the full-scale value when outputting the output current monitor value to terminals FM, CA and AM.	
				0 to 3600 A*2		
866 **M042**	**Torque monitoring reference**	150%		0 to 400%	Set the full-scale value when outputting the torque monitor value to terminals FM, CA and AM.	
290 **M044**	**Monitor negative output selection**	0		0 to 7	Set the availability of output with a minus sign for the terminal AM, the operation panel display, or monitoring via communication. (Refer to page 272)	
291 **D100**	**Pulse train I/O selection**	0		0	**Pulse train input (terminal JOG)**	**Pulse train output (terminal FM)**
				0	JOG signal*3	FM output*4
				1	Pulse train input	FM output*4
				10*4	JOG signal*3	High-speed pulse train output (50% duty)
				11*4	Pulse train input	High-speed pulse train output (50% duty)
				20*4	JOG signal*3	High-speed pulse train output (ON width fixed)
				21*4	Pulse train input	High-speed pulse train output (ON width fixed)
				100*4	Pulse train input	High-speed pulse train output (ON width fixed) Output the pulse train input without changes.

*1 FR-F820-02330(55K) or lower and FR-F840-01160(55K) or lower.
*2 FR-F820-03160(75K) or more, FR-F840-01800(75K) or more.
*3 Function assigned to **Pr.185 JOG terminal function selection**.
*4 Valid only for the FM type inverters.

◆Monitor description list (Pr.54, Pr.158)

- Set **Pr.54 FM/CA terminal function selection** for the monitor to be output to the terminal FM (pulse train output) and terminal CA (analog current output).
- Set **Pr.158 AM terminal function selection** for the monitor to be output to the terminal AM (analog voltage output). Output with a negative sign can be made (-10 VDC to +10 VDC) from the terminal AM. **O** in the [Negative (-) output] indicates the output value is negative at the terminal AM. (For setting of the output with/without minus sign, refer to **page 263**.)
- Refer to the following table and set the monitor to be displayed. (Refer to **page 264** for the monitor description.)

Types of monitor	Unit	Pr.54 (FM/CA) Pr.158 (AM) setting	Terminal FM, CA, AM Full-scale value	Negative (-) output	REMARKS
Output frequency	0.01 Hz	1	**Pr.55**		
Output current*2	0.01 A/0.1 A*1	2	**Pr.56**		
Output voltage	0.1 V	3	200 V class: 400 V 400 V class: 800 V		
Frequency setting value	0.01 Hz	5	**Pr.55**		
Running speed	1 (r/min)	6	Value is **Pr.55** converted by **Pr.37, Pr.144**. (Refer to **page 261**.)		Refer to **page 261** for the running speed monitor.
Motor torque	0.1%	7	**Pr.866**	O	
Converter output voltage*2	0.1 V	8	200 V class: 400 V 400 V class: 800 V		
—	—	9	—		For manufacturer setting. Do not set.
Electronic thermal O/L relay load factor	0.1%	10	Electronic thermal O/L relay operation level (100%)		
Output current peak value	0.01 A/0.1 A*1	11	**Pr.56**		
Converter output voltage peak value	0.1 V	12	200 V class: 400 V 400 V class: 800 V		
Input power	0.01 kW/ 0.1 kW*1	13	Rated inverter power × 2		
Output power*2	0.01 kW/ 0.1 kW*1	14	Rated inverter power × 2		
Load meter	0.1%	17	**Pr.866**		
Motor excitation current	0.0 1 A/0.1 A*1	18	**Pr.56**		
Reference voltage output	—	21	—		Terminal FM: 1440 pulses/s is output when **Pr.291** = 0,1. 50k pulses/s is output when **Pr.291** ≠ 0,1. Terminal CA: output is 20 mA Terminal AM: output is 10 V.
Motor load factor	0.1%	24	200%		
Motor output	0.01 kW/ 0.1 kW*1	34	Rated motor capacity		
Energy saving effect	Changeable by parameter setting	50	Inverter capacity		Regarding the energy saving monitor, refer to **page 283**
PID set point	0.1%	52	100%		Refer to **page 389** for the PID control.
PID measured value	0.1%	53	100%		
PID deviation	0.1%	54*3	100%	O	Output with a negative sign (terminal AM)
Motor thermal load factor	0.1%	61	Motor thermal operation level (100%)		
Inverter thermal load factor	0.1%	62	Inverter thermal operation level (100%)		
PID measured value 2	0.1%	67	100%		
PLC function analog output	0.1%	70	100%	O	Refer to **page 431** for the PLC function.

Types of monitor	Unit	Pr.54 (FM/CA) Pr.158 (AM) setting	Terminal FM, CA, AM Full-scale value	Negative (-) output	REMARKS
BACnet terminal FM/CA output level	0.1%	85*4	100%		The value set in the Analog Output object (ID=0: Terminal FM/CA) for BACnet communication is output.
BACnet terminal AM output level	0.1%	86*3	100%	O	The value set in the Analog Output object (ID=1: Terminal AM) for BACnet communication is output. (The output is always negative regardless of the **Pr.290** setting when the monitored value is negative.)
Remote output value 1	0.1%	87	1000%	O	Refer to page 300 for the analog remote output.
Remote output value 2	0.1%	88	1000%		
Remote output value 3	0.1%	89	1000%		
Remote output value 4	0.1%	90	1000%		
PID manipulated variable	0.1%	91*3	100%	O	Output with a minus sign (terminal AM)
Second PID set point	0.1%	92	100%		Refer to page 389 for the PID control.
Second PID measured value	0.1%	93	100%		
Second PID deviation	0.1%	94*3	200%	O	
Second PID measured value 2	0.1%	95	100%		
Second PID manipulated variable	0.1%	96*3	100%	O	
Control circuit temperature	1°C	98	100°C	O	Terminal FM/CA: 0 to 100°C terminal AM: -20 to 100°C

*1 Differs according to capacities. (FR-F820-02330(55K) or lower, FR-F840-01160(55K) or lower /FR-F820-03160(75K) or higher, FR-F840-01800(75K) or higher)

*2 When the output current is less than the specified current level (5% of the rated inverter current), the output current is monitored as 0 A. Therefore, the monitored value of an output current and output power may be displayed as "0" when using a much smaller-capacity motor compared to the inverter or in other instances that cause the output current to fall below the specified value.

*3 The setting is available only with terminal AM (**Pr.158**).

*4 The setting is available only with terminal FM/CA (**Pr.54**).

◆Frequency monitor reference (Pr.55)

- Set the full-scale value for outputting the monitored items of output frequency, frequency setting value to the terminals FM, CA and AM.

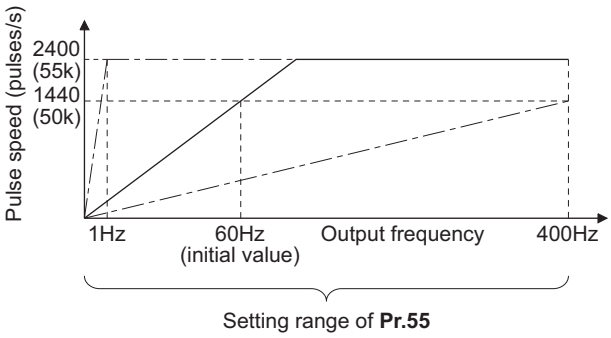

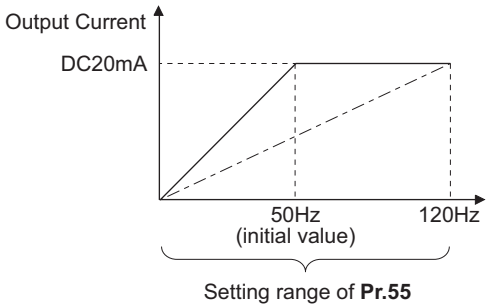

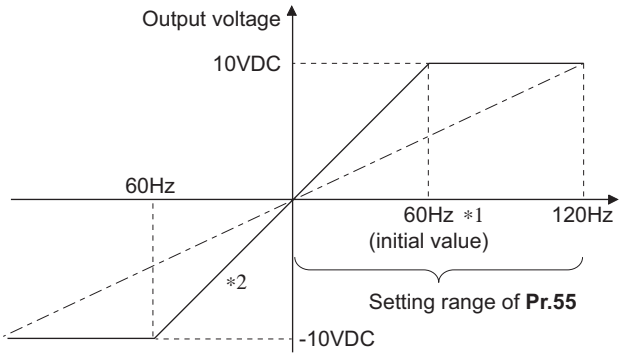

- For the FM-type inverters, set the full-scale value of the connected meter when the pulse speed of terminal FM is 1440 pulses/s (50k pulses/s). Set the frequency to be indicated as the full scale value on the frequency meter (1 mA analog meter) connected between terminal FM and SD. (For example, 60 Hz or 120 Hz.) Pulse speed is proportional to the output frequency of the inverter. (Maximum pulse train output is 2400 pulses/s (55k pulses/s).)
- For the CA-type inverters, set the full-scale value of the connected meter when output current of terminal CA is 20 mA. Set the frequency to be indicated as the full scale value on the meter (20 mA DC ammeter connected between terminal CA and 5; for example, 60 Hz or 120 Hz. Output current is proportional to the frequency. (The maximum output current is 20 mA DC.)
- For the calibration of terminal AM, set the full-scale value of the connected meter when output voltage of terminal FM is 10 VDC. Set the frequency to be indicated as the full scale value on the meter (10 VDC voltmeter) connected between terminal AM and 5. (For example, 60 Hz or 120 Hz) Output voltage is proportional to the frequency. (The maximum output voltage is 10 VDC.)

∗1 FM type: 60 Hz; CA type: 50 Hz
∗2 Output with a negative sign available when **Pr.290 Monitor negative output selection** = "1, 3"

◆Current monitor reference (Pr.56)

- Output current, Output current peak value, Motor excitation current and monitor from the terminals FM, CA and AM.
- For the FM-type inverters, set the full-scale value of the connected meter when the pulse speed of terminal FM is 1440 pulses/s (50k pulses/s).
  Set the current to be indicated as the full scale value to the meter (1 mA analog meter) connected between terminal FM and SD.
  Pulse speed is proportional to the monitored value of output current. (Maximum pulse train output is 2400 pulses/s (55k pulses/s).)
- For the CA-type inverters, set the full-scale value of the connected current meter when output current of terminals CA is 20 mA. Set the current to be indicated as the full scale value on the meter (20 mADC ammeter) connected between terminals CA and 5.Output current is proportional to the monitored value of output current. (The maximum output current is 20 mADC.)
- For the calibration of terminal AM, set the full-scale value of the connected current meter when the output voltage of terminal AM is 10 VDC.
  Set the current to be indicated as the full scale value on the meter (10 VDC voltmeter) connected between terminal AM and 5.
  Output voltage is proportional to the monitored value of output current. (The maximum output voltage is 10 VDC.)

◆Torque monitor reference (Pr.866)

- Set the full scale value when outputting the current monitor from terminal the FM, CA or AM.
- For the FM-type inverters, set the full-scale value of the connected torque meter when the pulse speed of terminal FM is 1440 pulses/s (50k pulses/s). Set the torque to be indicated as the full scale value on the meter (1 mA analog meter) connected between terminals FM and SD.
  Pulse speed is proportional to the monitored value of torque. (Maximum pulse train output is 2400 pulses/s (55k pulses/s).)
- For the CA-type inverters, set the full-scale value of the connected torque meter when output current of the terminal CA is 20 mADC.
  Set the torque to be indicated as the full scale value on the meter (20 mADC ammeter) connected between terminals CA and 5.
  Output current is proportional to the monitored value of torque. (The maximum output voltage is 20 mADC.)
- For the calibration of terminal AM, set the full-scale value of the connected torque meter when the output voltage of terminal AM is at 10 VDC.
  Set the torque to be indicated as the full scale value on the meter (10 VDC voltmeter) connected between terminal AM and 5.
  Output voltage is proportional to the monitored value of torque. (The maximum output voltage is 10 VDC.)

◆Terminal FM pulse train output (Pr.291)

- Two kinds of pulse trains can be output to the terminal FM.

FM output circuit

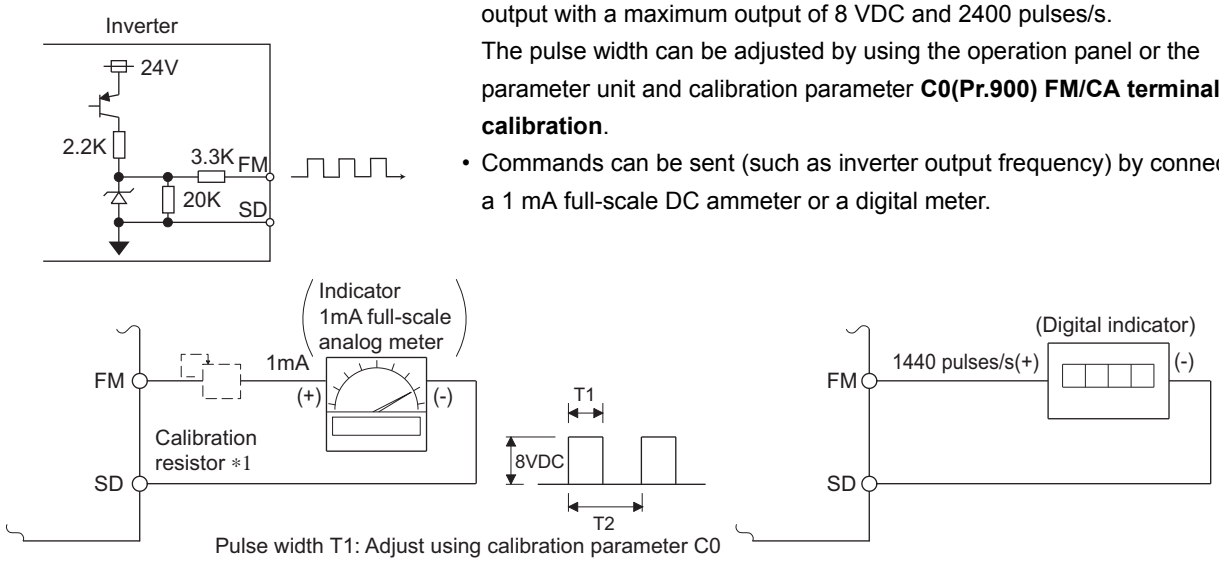

Pulse width T1: Adjust using calibration parameter C0
Pulse cycle T2: Set with **Pr.55** (frequency monitor)
Set with **Pr.56** (current monitor)

- When **Pr.291 Pulse train I/O selection** = "0 (initial value) or 1", this is FM output with a maximum output of 8 VDC and 2400 pulses/s.
  The pulse width can be adjusted by using the operation panel or the parameter unit and calibration parameter **C0(Pr.900) FM/CA terminal calibration**.
- Commands can be sent (such as inverter output frequency) by connecting a 1 mA full-scale DC ammeter or a digital meter.

∗1 Not needed when the operation panel or the parameter unit is used for calibration.
Use a calibration resistor when the indicator (frequency meter) needs to be calibrated by a neighboring device because the indicator is located far from the inverter.
However, the frequency meter needle may not deflect to full-scale if the calibration resistor is connected. In this case, calibrate additionally with the operation panel or the parameter unit.

∗2 In the initial setting, 1 mA full-scale and 1440 pulses/s terminal FM are used at 60 Hz.

High-speed pulse train output circuit (example of connection to pulse counter)

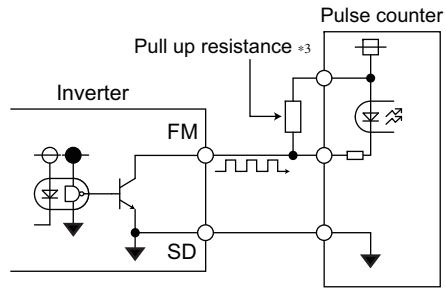

- When **Pr.291 Pulse train I/O selection** = "10, 11, 20, 21, 100", this is high-speed pulse train output for open collector output. A maximum pulse train of 55k pulses/s is outputted.
  There are two types of pulse width: "50% duty" and "fixed ON width"; this cannot be adjusted with the calibration parameter **C0 (Pr.900) FM/CA terminal calibration.**

*3 The pulses may weaken due to stray capacitance in the wiring if the wiring is long, and the pulse counter will be unable to recognize the pulses. Connect the open collector output to the power source with a pull-up resistor if the wiring is too long.
Check the pulse counter specs for the pull-up resistance. The resistance should be at 80 mA of the load current or less.

Pulse of Pr.291 = "10, 11"

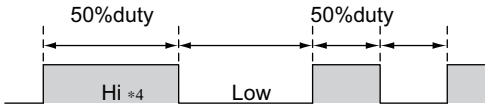

- When **Pr.291** = "10, 11", the pulse cycle is 50% duty (ON width and OFF width are the same).

Pulse of Pr.291 = "20, 21, 100"

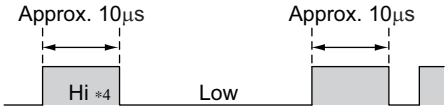

- When **Pr.291** = "20, 21, 100", the pulse ON width is output at a fixed width (approx. 10 μs).
- At the "100" setting, the same pulse train from the pulse train input (terminal JOG) will be outputted. This is used when running at a synchronized speed with more than one inverter. (Refer to page 218.)

*4 "HIGH" indicates when the open collector output transistor is OFF.

Item	High-speed pulse train output specifications
Output method	NPN open collector output
Voltage between collector-emitter	30 V (max.)
Maximum permissible load current	80 mA
Output pulse rate	0 to 55 kpps*1
Output resolution	3 pps (excluding jitter)

*1 50 kpps when the monitor output value is 100%.

NOTE

- Terminal JOG input specifications (pulse train input or contact input) can be selected with **Pr.291**. When changing the setting value, be careful not to change the terminal JOG input specifications. (Refer to page 218 for pulse train input.)
- Connect a meter between the terminals FM and SD after changing the **Pr.291** setting value. When using the pulse train of FM output (voltage output), be careful that voltage is not added to terminal FM.
- A connection cannot be made to the pulse input of a source logic type.
- If all parameter clear is performed when selecting the high-speed pulse train output (**Pr.291** = "10, 11, 20, 21, 100"), the terminal FM output can be changed from high-speed pulse train output to FM output (voltage output), since the **Pr.291** setting value returns to the initial value of "0". Perform all parameter clear after removing the device connected to the terminal FM.

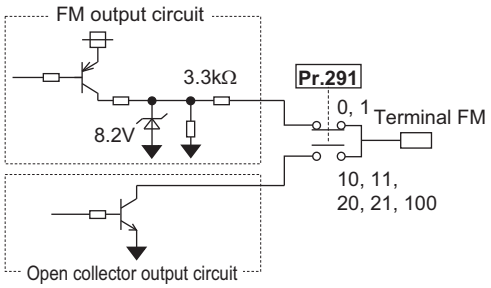

5.8.4 Monitor display selection for terminals FM/CA and AM

By using the operation panel or the parameter unit, terminals FM, CA and AM can be adjusted (calibrated) to the full scale.

Pr.	Name	Initial value	Setting range	Description
C0 (900)*1 M310	**FM/CA terminal calibration**	—	—	Calibrates the scale of the meter connected to terminals FM and CA.
C1 (901)*1 M320	**AM terminal calibration**	—	—	Calibrates the scale of the analog meter connected to terminal AM.
C8 (930)*1 M330	**Current output bypass signal**	0%	0 to 100%	Set the signal value at the minimum analog current output.
C9 (930)*1 M331	**Current output bypass current**	0%	0 to 100%	Set the current value at the minimum analog current output.
C10 (931)*1 M332	**Current output gain signal**	100%	0 to 100%	Sets the signal value when the analog current output is at maximum.
C11 (931)*1 M333	**Current output gain current**	100%	0 to 100%	Set the current value at the maximum analog current output.
867 M321	**AM output filter**	0.01 s	0 to 5 s	Set the terminal AM output filter.
869 M334	**Current output filter**	0.01 s	0 to 5 s	Set the terminal AM output filter.

*1 The parameter number in parentheses ( ) is the one for use with the LCD operation panel and the parameter unit (FR-PU07).

◆Terminal FM calibration (C0 (Pr.900))

- The terminal FM is preset to output pulses. By setting **C0 (Pr.900)**, the meter connected to the inverter can be calibrated by parameter setting without use of a calibration resistor.
- Using the pulse train output of the terminal FM, a digital display can be provided to connect a digital counter.The monitor value is 1440 pulses/s output at the full-scale value of the monitor description list (on page 264) **(Pr.54 FM/CA terminal function selection)**.

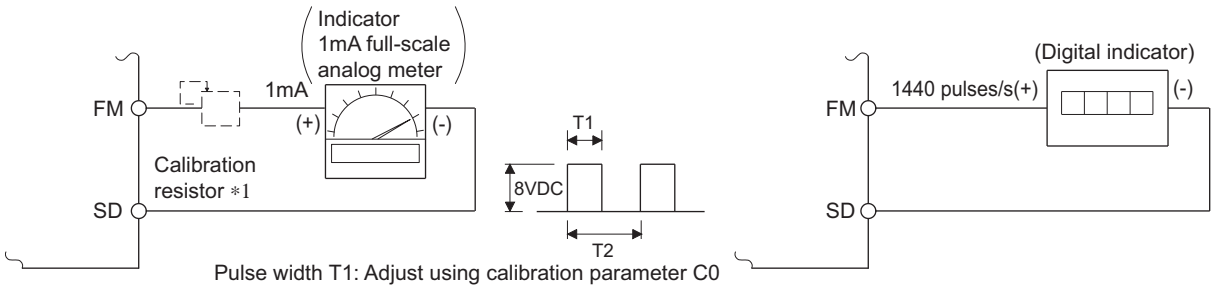

Pulse width T1: Adjust using calibration parameter C0
Pulse cycle T2: Set with **Pr.55** (frequency monitor)
Set with **Pr.56** (current monitor)

*1 Not needed when the operation panel or the parameter unit is used for calibration.
Use a calibration resistor when the indicator (frequency meter) needs to be calibrated by a neighboring device because the indicator is located far from the inverter.
However, the frequency meter needle may not deflect to full-scale if the calibration resistor is connected.In this case, perform calibration using the operation panel or the parameter unit.

*2 In the initial setting, 1 mA full-scale and 1440 pulses/s terminal FM are used at 60 Hz.

- Calibrate the terminal FM in the following procedure.
  1) Connect an indicator (frequency meter) across terminals FM and SD of the inverter. (Note the polarity. The terminal FM is positive.)
  2) When a calibration resistor has already been connected, adjust the resistance to "0" or remove the resistor.
  3) Refer to the monitored item list (page 264) and set **Pr.54**.
     When the running frequency or inverter output current is selected on the monitor, set the running frequency or current value at which the output signal will be 1440 pulses/s, using **Pr.55 Frequency monitoring reference** or **Pr.56 Current monitoring reference** beforehand. Normally, at 1440 pulses/s the meter deflects to full-scale.
  4) If the meter needle does not point to maximum even at maximum output., calibrate it with **C0(Pr.900)**.

NOTE

- When outputting such an item as the output current, which cannot reach a 100% value easily by operation, set **Pr.54** to "21" (reference voltage output) and calibrate. 1440 pulses/s are output from the terminal FM.
- When **Pr.310 Analog meter voltage output selection** = "21", the terminal FM calibration cannot be performed. For the details of **Pr.310**, refer to the Instruction Manual of FR-A8AY.
- The wiring length of the terminal FM should be 200 m at maximum.
- The initial value of the calibration parameter **C0(Pr.900)** is set to 1 mA full-scale and 1440 pulses/s terminal FM pulse train output at 60 Hz. The maximum pulse train output of terminal FM is 2400 pulses/s.
- When connecting a frequency meter between terminals FM-SD and monitoring the running frequency, it is necessary to change **Pr.55** to the maximum frequency, since the FM terminal output will be saturated at the initial value when the maximum frequency reaches 100 Hz or greater.
- Calibration with the calibration parameter **C0(Pr.900)** cannot be done when **Pr.291** Pulse train I/O selection = "10, 11, 20, 21, 100" (high-speed pulse train output).

◆Calibration procedure for terminal FM when using the operation panel (FR-DU08)

	Operation
1.	Screen at power-ON The monitor display appears.
2.	Changing the operation mode Press PU/EXT to choose the PU operation mode. [PU] indicator is lit. Calibration is also possible in the External operation mode.
3.	Parameter setting mode Press MODE to choose the parameter setting mode. (The parameter number read previously appears.)
4.	Calibration parameter selection Turn the dial until C. . . . appears. Press SET to display C -- -- -- -- .
5.	Selecting the parameter number Turn the dial until C 0 (**C0(Pr.900) FM/CA terminal calibration**) appears. Press SET to enable the parameter setting. The monitored value of the item (initially the output frequency) selected by **Pr.54 FM/CA terminal function selection** will appear.
6.	Pulse output via terminal FM If stopped, press FWD or REV to start the inverter operation. (To monitor the output frequency, motor connection is not required. Calibration is also possible in a stop status.
7.	Scale adjustment Turn the dial to move the meter needle to a desired position.
8.	Setting completed Press SET to enter the setting. The monitored value and C 0 flicker alternately. • Turn the dial to read another parameter. • Press SET to return to the C -- -- -- -- display. • Press SET twice to show the next parameter.

NOTE

- Calibration can also be made for the External operation.Set the frequency in the External operation mode, and make calibration in the above procedure.
- Calibration can be performed during operation.
- For the operation from the parameter unit, refer to the Instruction Manual of the parameter unit.

◆Terminal CA calibration (C0 (Pr.900), C8 (Pr.930) to C11 (Pr.931))

- Terminal CA is initially set to provide a 20 mADC output in the full-scale state of the corresponding monitor item. **Calibration parameter C0 (Pr.900)** allows the output current ratio (gains) to be adjusted according to the meter scale.Note that the maximum output current is 20 mADC.
- Set a value at the minimum current output in the calibration parameters **C8 (Pr.930)** and **C9 (Pr.930)**. Calibration parameter **C10 (Pr.931)** and **C11 (Pr.931)** are used to set a value at the maximum current output.
- Set the output signal values (output monitor set with **Pr.54**) at zero and at the maximum current output from the terminal CA (using calibration parameters **C8 (Pr.930)** and **C10 (Pr.931)**. The full scale for each monitor is 100% at this time.
- Set the output current values (output monitor set with **Pr.54**) at zero and at the maximum current output from the terminal CA (using calibration parameters **C9 (Pr.930)** and **C11 (Pr.931)**. The output current calibrated by calibration parameter **C0 (Pr.900)** is 100% at this time.

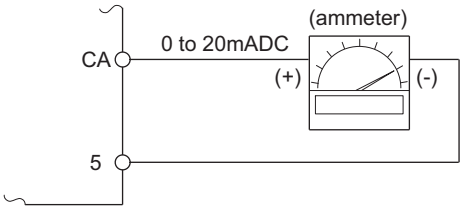

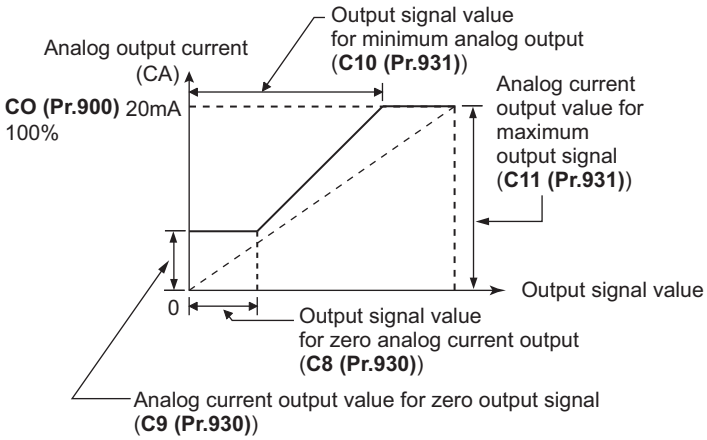

- Calibrate the terminal CA in the following procedure.
  1) Connect a 0-20 mADC indicator (frequency meter) across terminals CA and 5 of the inverter. (Note the polarity.The terminal CA is positive.)
  2) Set the initial value of calibration parameter **C8 (Pr.930)** to **C11 (Pr.931)**. If the meter needle does not indicate zero when the current input is at zero, calibrate the meter using **C8 (Pr.930)** and **C9 (Pr.930)**.
  3) Refer to the monitor description list (page 274) and set **Pr.54**.
     When the running frequency or inverter output current is selected on the monitor, set the running frequency or current value at which the output signal will be 20 mA, using **Pr.55** or **Pr.56** beforehand.
  4) If the meter needle does not point to maximum even at maximum output, calibrate it with **C0 (Pr.900)**.

NOTE

- When outputting such an item as the output current, which cannot reach a 100% value easily by operation, set **Pr.54** to "21" (reference voltage output) and calibrate.20 mADC is output from the terminal CA.
- When **Pr.310 Analog meter voltage output selection** = "21", the terminal CA calibration cannot be performed. For the details of **Pr.310**, refer to the Instruction Manual of FR-A8AY.
- Output is possible from terminal CA even if **C8 (Pr.930)** ≥ **C10 (Pr.931)**, **C9 (Pr.930)** ≥ **C11 (Pr.931)**.

◆Adjusting the response of terminal CA (Pr.869)

- Using **Pr.869**, the output voltage response of the terminal CA can be adjusted in the range of 0 to 5 s.
- Increasing the setting stabilizes the terminal CA output more but reduces the response level. (Setting "0" sets the response level to 7 ms.)

◆Calibration of terminal AM (C1 (Pr.901))

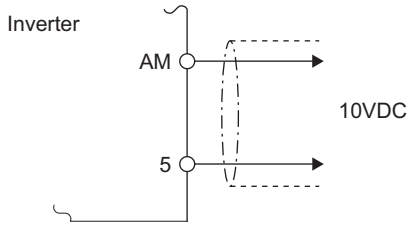

- Terminal AM is initially set to provide a 10 VDC output in the full-scale state of the corresponding monitor item. **Calibration parameter C1 (Pr.901)** allows the output voltage ratio (gains) to be adjusted according to the meter scale. Note that the maximum output voltage is 10 VDC.

- Calibrate the AM terminal in the following procedure.
  1) Connect a 0-10 VDC indicator (frequency meter) across terminals AM and 5 of the inverter.(Note the polarity. The terminal AM is positive.)
  2) Refer to the monitor description list (page 264) and set **Pr.158 AM terminal function selection**.
     When the running frequency or inverter output current is selected on the monitor, set the running frequency or current value at which the output signal will be 10 V, using **Pr.55** or **Pr.56** beforehand.
  3) If the meter needle does not point to maximum even at maximum output., calibrate it with **C1 (Pr.901)**.

NOTE

- When outputting such an item as the output current, which cannot reach a 100% value easily by operation, set **Pr.158** to "21" (reference voltage output) and calibrate.10 VDC is output from the terminal AM.
- When **Pr.306 Analog output signal selection** = "21", the terminal AM calibration cannot be performed. For the details of **Pr.306**, refer to the Instruction Manual of FR-A8AY.
- Use **Pr.290 Monitor negative output selection** to enable negative output from the terminal AM. When this is set, the output voltage range will be -10 VDC to +10 VDC. Calibrate the terminal AM with the maximum positive output value.

◆Adjusting the response of terminal AM (Pr.867)

- Using **Pr.867**, the output voltage response of the terminal AM can be adjusted in the range of 0 to 5 s.
- Increasing the setting stabilizes the terminal AM output more but reduces the response level. (Setting "0" sets the response level to 7 ms.)

Parameters referred to

Pr.54 FM/CA terminal function selection page 273
Pr.55 Frequency monitoring reference page 273
Pr.56 Current monitoring reference page 273
Pr.158 AM terminal function selection page 273
Pr.290 Monitor negative output selection page 273
Pr.291 Pulse train I/O selection page 218

5.8.5 Energy saving monitor

From the estimated consumed power during commercial power supply operation, the energy saving effect by use of the inverter can be monitored and output.

Pr.	Name	Initial value	Setting range	Description
52 **M100**	**Operation panel main monitor selection**	0 (output frequency)	Refer to page 263	50: Power saving monitor 51: Cumulative power saving monitor
774 **M101**	**Operation panel monitor selection 1**	9999		
775 **M102**	**Operation panel monitor selection 2**			
776 **M103**	**Operation panel monitor selection 3**			
992 **M104**	**Operation panel setting dial push monitor selection**	0 (set frequency)		
54 **M300**	**FM/CA terminal function selection**	1 (output frequency)	Refer to page 273	50: Power saving monitor
158 **M301**	**AM terminal function selection**			
891 **M023**	**Cumulative power monitor digit shifted times**	9999	0 to 4	Set the number of times to shift the cumulative power monitor digit. The monitored value is clamped at the maximum value.
			9999	No shift. The monitored value is cleared when it exceeds the maximum value.
892 **M200**	**Load factor**	100%	30 to 150%	Set the load factor for the commercial power supply operation. This is multiplied by the power consumption rate (page 286) during commercial power supply operation.
893 **M201**	**Energy saving monitor reference (motor capacity)**	Rated inverter current	0.1 to 55 kW*1	Set the motor capacity (pump capacity). Set when calculating the power saving power rate, average power saving rate, and power during commercial power supply operation.
			0 to 3600 kW*2	
894 **M202**	**Control selection during commercial power-supply operation**	0	0	Discharge damper control (fan)
			1	Inlet damper control (fan)
			2	Valve control (pump)
			3	Commercial power supply drive (fixed value)
895 **M203**	**Power saving rate reference value**	9999	0	Consider the value during commercial power supply operation as 100%.
			1	Consider **Pr.893** setting as 100%.
			9999	No function
896 **M204**	**Power unit cost**	9999	0 to 500	Set the power unit cost. The power cost savings are displayed on the energy saving monitor.
			9999	No function
897 **M205**	**Power saving monitor average time**	9999	0	Average of 30 minutes
			1 to 1000 h	Average of the set time
			9999	No function
898 **M206**	**Power saving cumulative monitor clear**	9999	0	Cumulative monitor value clear
			1	Cumulative monitor value hold
			10	Continue accumulation (communication data upper limit 9999)
			9999	Continue accumulation (communication data upper limit 65535)
899 **M207**	**Operation time rate (estimated value)**	9999	0 to 100%	This value is used for calculating the annual power saving amount. Set the annual operation ratio (consider 365 days × 24h as 100%).
			9999	No function

*1 For the FR-F820-02330(55K) or lower, and FR-F840-01160(55K) or lower.

*2 For the FR-F820-03160(75K) or higher, and FR-F840-01800(75K) or higher.

◆Energy saving monitor list

- The items that can be monitored on the power saving monitor (**Pr.52, Pr.54, Pr.158, Pr.774 to Pr.776, Pr.992** = "50") are indicated below.
  (Only [1 Power saving] and [3 Average power saving] can be set to **Pr.54** (terminal FM, terminal CA) **and Pr.158** (terminal AM).)

	Energy saving monitored item	Description and formula	Increment	Parameter setting			
				Pr.895	Pr.896	Pr.897	Pr.899
1	Power saving	The difference between the estimated value of the required power during commercial power supply operation and the input power calculated with the inverter. Power supply during commercial power supply operation - input power monitor	0.01 kW/ 0.1 kW*3	9999	—	9999	—
2	Power saving rate	The power saving ratio with the commercial power supply operation as 100%. **[1 Power saving]** / **Power during commercial power supply operation** × 100	0.1%	0			
		The power saving ratio with **Pr.893** as 100%. **[2 Power saving]** / **Pr.893** × 100		1			
3	Average power saving	The average power saving per hour during a predetermined time **(Pr.897)**. ∑ **([1 Power saving]** × Δt**)** / **Pr.897**	0.01 kWh/ 0.1 kWh*3	9999	9999	0 to 1000 h	
4	Average power saving rate	The average power saving ratio with the commercial power supply operation as 100%. ∑ **([2 Power saving rate]** × Δt**)** / **Pr.897** × 100	0.1%	0			
		The average power saving ratio with **Pr.893** as 100%. **[3 Average power saving]** / **Pr.893** × 100		1			
5	Average power cost savings	The average power saving in terms of cost. **[3 Average power saving]** × **Pr.896**	0.01/0.1*3	-	0 to 500		

- The items that can be monitored on the cumulative energy saving monitor (**Pr.52, Pr.774 to Pr.776, Pr.992** = "51") are indicated below.
  (The monitor value of the cumulative monitor can be shifted to the right with **Pr.891 Cumulative power monitor digit shifted times**.)

	Energy saving monitored item	Description and formula	Increment	Parameter setting			
				Pr.895	Pr.896	Pr.897	Pr.899
6	Power saving amount	The cumulative power saving is added up per hour. ∑([1 Power saving] × Δt)	0.01 kWh/ 0.1 kWh *1*2*3	—	9999	—	9999
7	Power cost saving	The power saving amount in terms of cost. **[6 Power saving amount]** × **Pr.896**	0.01/0.1 *1*3	—	0 to 500		
8	Annual power saving amount	Estimated value of annual power saving amount. **[6 Power saving amount]** / **Operation time during power saving accumulation** × 24 × 365 × **Pr.899** / **100**	0.01 kWh/ 0.1 kWh *1*2*3	—	9999		0 to 100%
9	Annual power cost savings	Annual power saving amount in terms of cost. **[8 Annual power saving amount]** × **Pr.896**	0.01/0.1 *1*3	—	0 to 500		

*1 For communication, (RS-485 communication, communication option), the display increments are 1. For example, "10.00 kWh" is displayed as "10" for communication data.

*2 When using the LCD operation panel or the parameter unit, "kW" is displayed

*3 The increment differs according to capacities. (FR-F820-02330(55K) or lower, FR-F840-01160(55K) or lower / FR-F820-03160(75K) or higher, FR-F840-01800(75K) or higher.)

NOTE

- The operation panel and the parameter unit has a 5-digit display. This means, for example, that when a monitor value in 0.01 units exceeds "999.99", the decimal place is moved up as in "1000.0" and the display changes to 0.1 units. The maximum display number is "99999".
- The maximum value for communication (RS-485 communication, communication option) when **Pr.898 Power saving cumulative monitor clear** = "9999" is "65535". The maximum value for the 0.01-unit monitor is "655.35", and the maximum value for the 0.1-unit monitor is "6553.5".

◆Power saving real-time monitor ([1 Power saving] and [2 Power saving rate])

- On the [1 Power saving monitor], an energy saving effect as compared to the consumed power during commercial power supply operation (estimated value) is calculated and displays on the main monitor.
- In the following cases, the [1 Power saving monitor] indicates "0".
  - Calculated values of the power saving monitor are negative values.
  - During DC injection brake operation.
  - The motor is not connected (output current monitor is 0A).
- On the [2 Power saving rate monitor], the power saving rate considering the consumed power during the power supply operation (estimated value) as 100% is displayed. **Pr.895 Power saving rate reference value** needs to be set to "0".
  Energy saving monitor reference (motor capacity)

◆Average power saving monitor ([3 Average power saving], [4 Average power saving rate], [5 Average power cost savings])

- The average power saving monitors are displayed by setting a value other than 9999 in **Pr.897 Power saving monitor average time**.
- On the [3 Average power saving monitor], average power saving amount for each average time period s displayed.
- When **Pr.897** is set, the average value is updated each time the average time period elapses, with the power-ON or inverter reset as the starting point.
  The power savings average value update timing signal (Y92) is inverted every time the average value is updated.

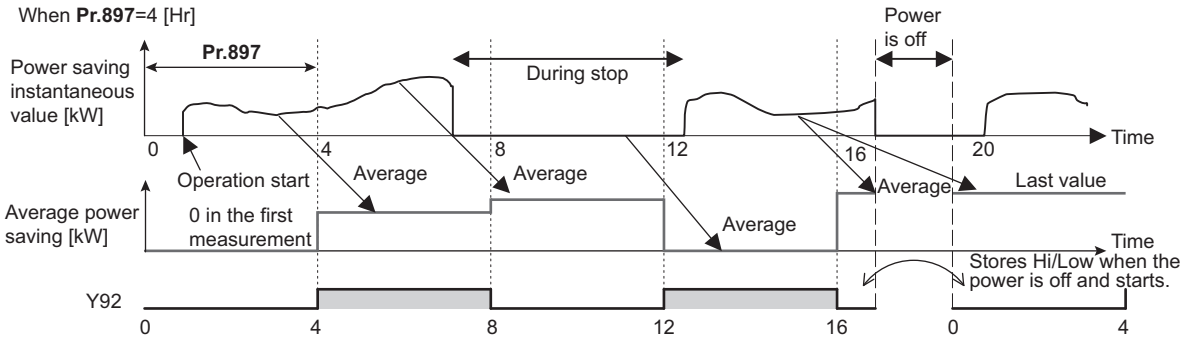

- When **Pr.895 Power saving rate reference value** the [2 Average power saving rate] for the averaging time period is displayed on the [4 Average power saving rate] monitor.
- When the power cost per 1 kWh power amount is set in **Pr.896 Power unit cost**, the cost of the saved power ([3 Average power saving] × **Pr.896**) is displayed on the [5 Average power cost savings].

◆Cumulative energy saving monitors ([6 Power saving amount], [7 Power cost saving], [8 Annual power saving amount], [9 Annual power saving savings]).

- On the cumulative energy saving cumulative monitors, the monitor data digit can be shifted to the right by the number of **Pr.891 Cumulative power monitor digit shifted times**. setting. For example, if the cumulative power value is 1278.56 kWh when **Pr.891** = "2", the PU/DU display is 12.78 (display in 100 kWh increments) and the communication data is 12. If the maximum value is exceeded when **Pr.891** = "0 to 4", the value is clamped at the maximum value, indicating that a digit shift is necessary. If the maximum value is exceeded when **Pr.891** = "9999", the value returns to 0, and the counting starts again. In other monitors, the value is clamped at the displayed maximum value.
- The [6 Cumulative power saving amount] monitor (6)] can measure the power during a predetermined period. Measure with the following procedure.
  1) Write "9999" or "10" in **Pr.898 Power saving cumulative monitor clear**.
  2) Write "0" in **Pr.898** at the measurement start time to clear the power saving cumulative monitor value and start power saving accumulation.
  3) Write "1" in **Pr.898** at the measurement end time to hold the power saving cumulative monitor value.

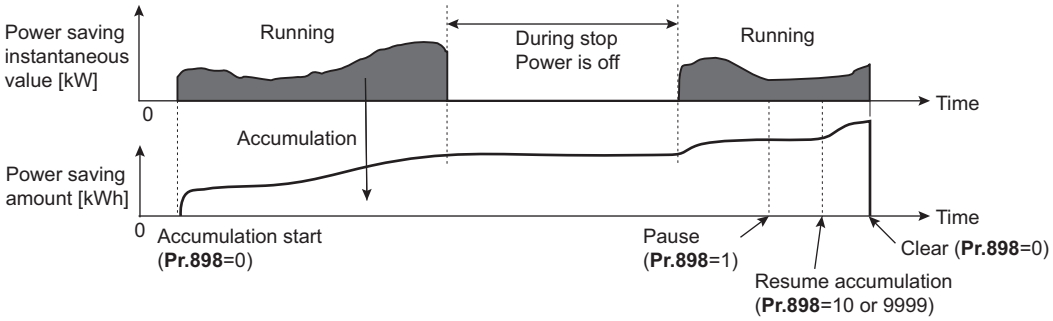

NOTE

- The power saving cumulative monitor value is saved every hour. This means that if the power is turned OFF after less than an hour, when then the power is turned ON again, the previously saved monitor value is displayed, and accumulation starts. (In some cases, the cumulative monitor value may go down.)

◆Estimated power value in commercial power supply operation (Pr.892, Pr.893, Pr.894)

- Select the pattern for commercial power supply operation from the four patterns of discharge damper control (fan), suction damper control (fan), valve control (pump) and commercial power driving, and set it in **Pr.894 Control selection during commercial power-supply operation**.
- Set the motor capacity (pump capacity) in **Pr.893 Energy saving monitor reference (motor capacity)**.
- As shown below, the consumed power ratio (%) during commercial power supply operation is estimated from the rotations per minute ratio for each operation pattern and rating (current output frequency/**Pr.3 Base frequency**).

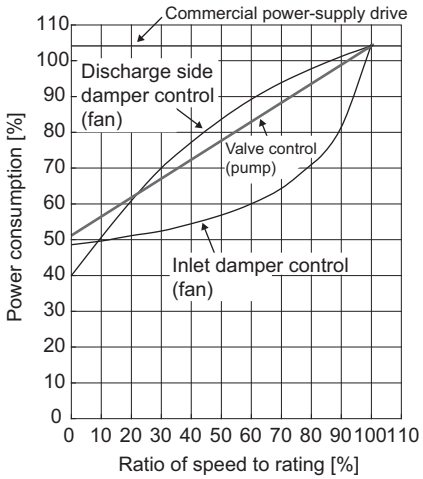

- The estimated value of the consumed power during commercial power supply operation (kW) is calculated from the motor capacity set in **Pr.893** and **Pr.892 Load factor** with the following formula.

$$\text{Estimated consumed power during commercial power supply operation (kW)} = \text{Pr.893 (kW)} \times \frac{\text{Consumed power (\%)}}{100} \times \frac{\text{Pr.892 (\%)}}{100}$$

NOTE

- In commercial power supply operation, because the rotations per minute cannot rise higher than the power supply frequency, if the output frequency rises to **Pr.3 Base frequency** or higher, it stays at a constant value.

◆Annual power saving amount and power cost savings (Pr.899)

- When the operation time rate [%] (ratio of time in year that the inverter actually drives the motor) is set in **Pr.899**, the annual energy saving effect can be estimated.
- When the operation pattern is determined to a certain extent, the estimated value of the annual power saving amount can be calculated by measuring the power saving in a certain measurement period.
- Refer to the following to set the operation time rate.

1)Estimate the average time of operation per day [h/day].

2)Calculate the number of operation days per year [days/year]. (Average number of operation days per month × 12 months)

3)Calculate the annual operation time [h/year] from **1)** and **2)**.

$$\text{Annual operation time (h/year)} = \text{average time (h/day)} \times \text{number of operation days (days/year)}$$

4)Calculate the operation time rate and set it in **Pr.899**.

$$\text{Operation time rate (\%)} = \frac{\text{Annual operation time (h/year)}}{\text{24 (h/day)} \times \text{365 (days/year)}} \times 100\ (\%)$$

NOTE

- Setting example for operation time rate: When operation is performed about 21h per day for an average 16 operation days per month,

  Annual operation time = 21 (h/day) × 16 (days/month) × 12 months = 4032 (h/year)

  $$\text{Operation time rate (\%)} = \frac{4032\ \text{(h/year)}}{24\ \text{(h/day)} \times 365\ \text{(days/year)}} \times 100(\%) = 46.03\%$$

  Set 46.03% in **Pr.899**.

- Calculate the annual power saving amount from **Pr.899 Operation time rate (estimated value)** and the average power saving monitor.

$$\text{Annual power saving amount (kWh/year)} = \text{With Pr.898 = 10 or 9999, average power saving (kW) during cumulative period} \times \text{24h} \times \text{365 days} \times \frac{\text{Pr.899}}{100}$$

- When the power cost per hour is set in **Pr.896 Power unit cost**, the annual power cost savings can be monitored.

$$\text{Annual power cost saving} = \text{annual power saving amount (kWh/year)} \times \text{Pr.896}$$

NOTE

- During regenerative driving, make calculation on the assumption that "power saving = power during commercial power supply operation (input power = 0)".

Parameters referred to

Pr.3 Base frequency page 497

Pr.52 Operation panel main monitor selection page 263

Pr.54 FM/CA terminal function selection page 273

Pr.158 AM terminal function selection page 273

5.8.6 Output terminal function selection

Use the following parameters to change the functions of the open collector output terminals and relay output terminals.

Pr.	Name		Initial value	Initial set signal	Setting range
190 M400	RUN terminal function selection	Open collector output terminal	0	RUN (Inverter running)	0 to 5, 7, 8, 10 to 19, 25, 26, 35, 39, 40, 45 to 54, 57, 64 to 68, 70 to 79, 82, 85, 90 to 96, 98 to 105, 107, 108, 110 to 116, 125, 126, 135, 139, 140, 145 to 154, 157, 164 to 168, 170 to 179, 182, 185, 190 to 196, 198 to 208, 211 to 213, 215, 300 to 308, 311 to 313, 315
191 M401	SU terminal function selection		1	SU (Up to frequency)	
192 M402	IPF terminal function selection		2*1	IPF (Instantaneous power failure/undervoltage)	
			9999*2	No function	
193 M403	OL terminal function selection		3	OL (Overload warning)	
194 M404	FU terminal function selection		4	FU (Output frequency detection)	
195 M405	ABC1 terminal function selection	Relay output terminal	99	ALM (Fault)	0 to 5, 7, 8, 10 to 19, 25, 26, 35, 39, 40, 45 to 54, 57, 64 to 68, 70 to 79, 82, 85, 90, 91, 94 to 96, 98 to 105, 107, 108, 110 to 116, 125, 126, 135, 139, 140, 145 to 154, 157, 164 to 168, 170 to 179, 182, 185, 190, 191, 194 to 196, 198 to 208, 211 to 213, 215, 300 to 308, 311 to 313, 315
196 M406	ABC2 terminal function selection		9999	No function	

Pr.	Name	Initial value	Setting range	Description
289 M431	Inverter output terminal filter	9999	5 to 50 ms	Set the time delay for the output terminal response.
			9999	No output terminal filter.

*1 The initial value is for standard models.

*2 The initial value is for separated converter types.

◆Output signal list

- The functions of the output terminals can be set.
- Refer to the following table and set each parameter. (0 to 99: Positive logic, 100 to 199: Negative logic)

Setting		Signal name	Function	Operation	Related parameter	Refer to page
Positive logic	Negative logic					
0	100	RUN	Inverter running	Output during operation when the inverter output frequency reaches **Pr.13 Starting frequency** or higher.	—	292
1	101	SU	Up to frequency *1	Output when the output frequency reaches the set frequency.	**Pr.41**	294
2	102	IPF	Instantaneous power failure/ undervoltage *2	Output when an instantaneous power failure or undervoltage protection operation occurs.	**Pr.57**	414, 420
3	103	OL	Overload warning	Output during operation of the stall prevention function.	**Pr.22, Pr.23, Pr.66, Pr.148, Pr.149, Pr.154**	248
4	104	FU	Output frequency detection	Output when the output frequency reaches the frequency set in **Pr.42** (**Pr.43** during reverse rotation) or higher.	**Pr.42, Pr.43**	294
5	105	FU2	Second output frequency detection	Output when the output frequency reaches the frequency set in **Pr.50** or higher.	**Pr.50**	294
7	107	For manufacturer setting. Do not set.				
8	108	THP	Electronic thermal O/L relay pre-alarm	Output when the cumulative electronic thermal O/L relay value reaches 85% of the trip level. (Electronic thermal O/L relay protection (E.THT/ E.THM) is activated when the value reaches 100%.)	**Pr.9**	225
10	110	PU	PU operation mode	Output when PU operation mode is selected.	**Pr.79**	200

Setting		Signal name	Function	Operation	Related parameter	Refer to page
Positive logic	Negative logic					
11	111	RY	Inverter operation ready	Output when the reset process is completed after powering ON the inverter (when starting is possible by switching the start signal ON or during operation).	—	292
12	112	Y12	Output current detection	Output when the output current is higher than the **Pr.150** setting for the time set in **Pr.151** or longer.	**Pr.150, Pr.151**	296
13	113	Y13	Zero current detection	Output when the output current is lower than the **Pr.152** setting for the time set in **Pr.153** or longer.	**Pr.152, Pr.153**	296
14	114	FDN	PID lower limit	Output when the value is lower than the lower limit of PID control.	**Pr.127 to Pr.134, Pr.575 to Pr.577**	378
15	115	FUP	PID upper limit	Output when the value is higher than the upper limit of PID control.		
16	116	RL	PID forward/reverse rotation output	Output during forward rotation under PID control.		
17	—	MC1	Electronic bypass MC1	Used when using the electronic bypass function.	**Pr.135 to Pr.139, Pr.159**	363
18	—	MC2	Electronic bypass MC2			
19	—	MC3	Electronic bypass MC3			
25	125	FAN	Fan fault output	Output when a fan fault occurs.	**Pr.244**	233
26	126	FIN	Heatsink overheat pre-alarm	Output when the heatsink temperature reaches about 85% of the heatsink overheat protection operation temperature.	—	543
35	135	TU	Torque detection	Output when the motor torque is higher than the **Pr.864** setting.	**Pr.864**	298
39	139	Y39	Start time tuning completion	Output when tuning is completed during start-up.	**Pr.95, Pr.574**	359
40	140	Y40	Trace status	Output during trace operation.	**Pr.1020 to Pr.1047**	433
45	145	RUN3	Inverter running and start command is ON	Output while the inverter is running and the start command is ON.	—	292
46	146	Y46	During deceleration at occurrence of power failure (retained until release)	Output after the power-failure deceleration function operates. (Retained until canceled.)	**Pr.261 to Pr.266**	426
47	147	PID	During PID control activated	Output during PID control.	**Pr.127 to Pr.134, Pr.575 to Pr.577**	378
48	148	Y48	PID deviation limit	Output when the absolute deviation value exceeds the limit value.	**Pr.127 to Pr.134, Pr.553, Pr.554**	378
49	149	Y49	During pre-charge operation	Output during pre-charge operation.	**Pr.127 to Pr.134, Pr.241, Pr.553, Pr.554, Pr.575 to Pr.577, Pr.753 to Pr.769, C42 to C45**	402
50	150	Y50	During second pre-charge operation			
51	151	Y51	Pre-charge time over	Output when the pre-charge operation reaches the time limit set in **Pr.764** or **Pr.769**.		
52	152	Y52	Second pre-charge time over			
53	153	Y53	Pre-charge level over	Output when the measured value before reaching the ending time during pre-charge operation is higher than the detection level set in **Pr.763** or **Pr.768**.		
54	154	Y54	Second pre-charge level over			
57	157	IPM	During PM motor control	Output while the control method is PM motor control.	**Pr.71, Pr.80, Pr.998**	149
64	164	Y64	Control circuit capacitor life	Output during retry processing.	**Pr.65 to Pr.69**	236
65	165	Y65	Emergency drive in operation *2	Output during emergency drive operation.	**Pr.514, Pr.515, Pr.523, Pr.524, Pr.1013**	238
66	166	ALM3	Fault output during emergency drive *2	Output when a fault occurs during emergency drive operation.		
67	167	Y67	Power failed signal *3	Output when the power failure time deceleration-to-stop function is activated during output shutoff due to power failure or undervoltage.	**Pr.261 to Pr.266**	426
68	168	EV	24 V external power supply operation	Output while operating with a 24 V power supply input from an external source.	—	57
70	170	SLEEP	PID output interruption	Output during PID output suspension function operation.	**Pr.127 to Pr.134, Pr.575 to Pr.577**	378

(M) Monitor display and monitor output signal

Setting		Signal name	Function	Operation	Related parameter	Refer to page
Positive logic	Negative logic					
71	171	RO1	Commercial power supply side motor 1 connection RO1	Output depending on the motor drive conditions when the multi-pump function is used.	**Pr.575 to Pr.591**	406
72	172	RO2	Commercial power supply side motor 2 connection RO2			
73	173	RO3	Commercial power supply side motor 3 connection RO3			
74	174	RO4	Commercial power supply side motor 4 connection RO4			
75	175	RIO1	Inverter side motor 1 connection RIO1			
76	176	RIO2	Inverter side motor 2 connection RIO2			
77	177	RIO3	Inverter side motor 3 connection RIO3			
78	178	RIO4	Inverter side motor 4 connection RIO4			
79	179	Y79	Pulse train output of output power	Output in pulses every time the accumulated output power of the inverter reaches the **Pr.799** setting.	**Pr.799**	303
82	182	Y82	BACnet binary output	Enables output from the Binary Output object for BACnet communication.	**Pr.549**	480
85	185	Y85	DC current feeding *2	Output when there is a power failure or undervoltage for the AC current.	**Pr.30**	508
86	186	Y86	Control circuit capacitor life (for FR-A8AY, FR-A8AR) *4	Output when the control circuit capacitor approaches the end of its life.	**Pr.255 to Pr.259**	180
87	187	Y87	Main circuit capacitor life (for FR-A8AY, FR-A8AR) *2*4	Output when the main circuit capacitor approaches the end of its life.		
88	188	Y88	Cooling fan life (for FR-A8AY, FR-A8AR) *4	Output when the cooling fan approaches the end of its life.		
89	189	Y89	Inrush current limit circuit life (for FR-A8AY, FR-A8AR) *2*4	Output when the inrush current limit circuit approaches the end of its life.		
90	190	Y90	Life alarm	Output when any of the control circuit capacitor, main circuit capacitor and inrush current limit circuit or the cooling fan approaches the end of its life.		
91	191	Y91	Fault output 3(power-OFF signal)	Output when an error occurs due to an inverter circuit fault or connection fault.	—	293
92	192	Y92	Energy saving average value updated timing	Switches between ON and OFF each time the average power saving is updated when using the power saving monitor. This cannot be set in **Pr.195 or Pr.196**, **Pr.320 to Pr.322** (relay output terminal).	**Pr.52, Pr.54, Pr.158, Pr.891 to Pr.899**	283
93	193	Y93	Current average monitor signal	Outputs the average current and maintenance timer value as a pulse. This cannot be set in **Pr.195 or Pr.196**, **Pr.320 to Pr.322** (relay output terminal).	**Pr.555 to Pr.557**	185
94	194	ALM2	Fault output 2	Output when the inverter's protective function is activated to stop the output (at fault occurrence). The signal output continues even during an inverter reset, and the signal output stops after the reset release. *5	—	293
95	195	Y95	Maintenance timer signal	Output when **Pr.503** reaches the **Pr.504** setting or higher.	**Pr.503, Pr.504**	184
96	196	REM	Remote output	Output via terminals when certain parameters are set.	**Pr.495 to Pr.497**	298
98	198	LF	Alarm	Output when an alarm (fan fault or communication error warning) occurs.	**Pr.121, Pr.244**	233, 446
99	199	ALM	Fault	Output when the inverter's protective function is activated to stop the output (at fault occurrence). The signal output is stopped after a reset.	—	293

Setting		Signal name	Function	Operation	Related parameter	Refer to page
Positive logic	Negative logic					
200	300	FDN2	Second PID lower limit	Output when the value is lower than the lower limit of second PID control.	Pr.753 to Pr.758 Pr.753 to Pr.758	378
201	301	FUP2	Second PID upper limit	Output when the value is higher than the upper limit of second PID control.		
202	302	RL2	Second PID forward/reverse rotation output	Output during forward rotation under second PID control.		
203	303	PID2	Second During PID control activated	Output during second PID control.		
204	304	SLEEP 2	During second PID output shutoff	Output during second PID output suspension function operation.	Pr.753 to Pr.758, Pr.1147 to Pr.1149	
205	305	Y205	Second PID deviation limit	Output when the absolute deviation value during second PID control exceeds the limit value.	Pr.753 to Pr.758, Pr.1145, Pr.1146	
206	306	Y206	Cooling fan operation command signal	Output when the cooling fan operation is commanded.	Pr.244	233
207	307	Y207	Control circuit temperature signal	Output when the temperature of the control circuit board reaches the detection level or higher.	Pr.663	304
208	308	PS	PU stopped signal	Output while the PU is stopped.	Pr.75	162
211	311	LUP	Upper limit warning detection	Output when the load fault upper limit warning is detected.	Pr.1480 to Pr.1492	255
212	312	LDN	Lower limit warning detection	Output when the load fault lower limit warning is detected.		
213	313	Y213	During load characteristics measurement	Output during measurement of the load characteristics.		
215	315	Y215	During cleaning	Output during operation of the cleaning function.	Pr.1469 to Pr.1479	375
9999		—	No function	—	—	—

*1 Take caution when changing the frequency setting with an analog signal or the setting dial of the operation panel (FR-DU08), because this change speed and the timing of the change speed determined by the acceleration/deceleration time setting may cause the output of the SU (up to frequency) signal to switch repeatedly between ON and OFF. (This repeating does not occur when the acceleration/deceleration time setting is "0 s".)

*2 The setting is available only for standard models.

*3 This signal cannot be assigned to the output terminals for plug-in options (FR-A8AY, FR-A8AR).

*4 Available when the plug-in option is connected.

*5 When the power is reset, the fault output 2 signal (ALM2) turns OFF at the same time as the power turns OFF.

NOTE

- The same function may be set to more than one terminal
- The terminal conducts during function operation when the setting is "0 to 99, 200 to 299", and does not conduct when the setting is "100 to 199, 300 to 399".
- When **Pr.76 Fault code output selection** = "1", the output signals of terminals SU, IPF, OL and FU operate according to **Pr.76** setting. (When the inverter's protective function is activated, the signal output switches to fault code output.)
- The outputs of terminal RUN and the fault output relay are assigned according to the settings above, regardless of **Pr.76**.
- Changing the terminal assignment using **Pr.190 to Pr.196 (output terminal function selection)** may affect the other functions. Set parameters after confirming the function of each terminal.
- Do not assign signals which repeat frequently between ON and OFF to terminals A1B1C1 or A2B2C2. The life of the relay contacts will be shortened.

◆Adjusting the output terminal response level (Pr.289)

- The response level of the output terminals can be delayed in a range of 5 to 50 ms. (Operation example for the RUN signal.)

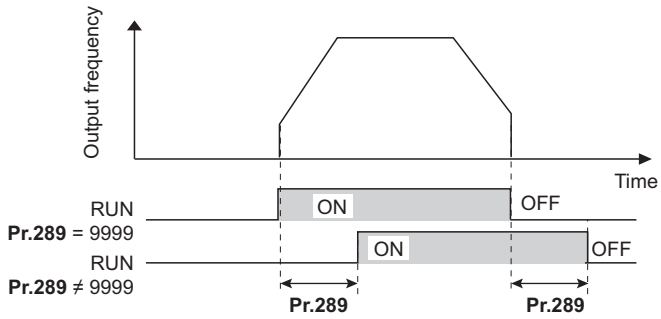

NOTE

- When **Pr.157 OL signal output timer** is set for the Overload warning (OL) signal output, the OL signal is output when the set time of (**Pr.157** + **Pr.289**) elapses.
- For the output signal and the fault code output (on page 300) used in the PLC function (on page 431), the **Pr.289** setting is invalid (no filter).

◆Inverter operation ready signals (RY signal) and inverter running signals (RUN, RUN3 signals)

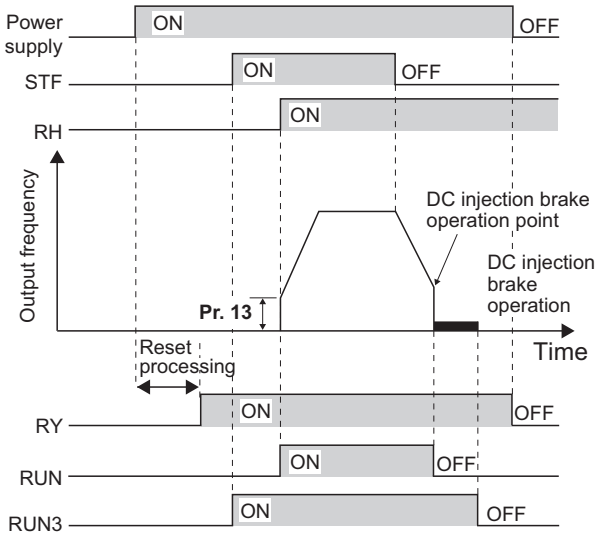

- When the inverter is ready for operation, the Inverter operation ready (RY) signal turns ON (stays ON during operation.)
- When the inverter output frequency reaches **Pr.13 Starting frequency** or higher, the Inverter running (RUN) signals turn ON. The signal is OFF while the inverter is stopped and during DC injection brake operation. Inverter
- The Inverter running and start command is ON (RUN3) signal is ON while the inverter is running or the start signal is ON. (When the start command is ON, the RUN3 signal output turns ON even while the inverter's protective function is activated or the MRS is ON.) During DC injection brake operation as well, the output is ON, and when the inverter stops, it turns OFF.

- According to the inverter condition, the ON/OFF operation of each signal is as shown below.

Output signal	Start signal OFF (during stop)	Start signal ON (during stop)	Start signal ON (running)	DC injection brake operation	Output shutoff*2		Automatic restart after instantaneous power failure		
							Coasting		Restarting
					Start signal ON	Start signal OFF	Start signal ON	Start signal OFF	
RY*3	ON	ON	ON	ON	OFF		ON*1		ON
RUN	OFF	OFF	ON	OFF	OFF		OFF		ON
RUN3	OFF	ON	ON	ON	ON	OFF	ON	OFF	ON

*1 OFF during power failure or undervoltage.
*2 Output is shutoff in conditions like a fault and when the MRS signal is ON.
*3 OFF while power is not supplied to the main circuit power supply.

- When using the RY, RUN and RUN3 signals, refer to the following and assign the functions by **Pr.190 to Pr.196 (output terminal function selection)**.

Output signal	Pr.190 to Pr.196 settings	
	Positive logic	Negative logic
RY	11	111
RUN	0	100
RUN3	45	145

NOTE

- The RUN signal (positive logic) is assigned to the terminal RUN in the initial status.

◆Fault output signals (ALM, ALM2)

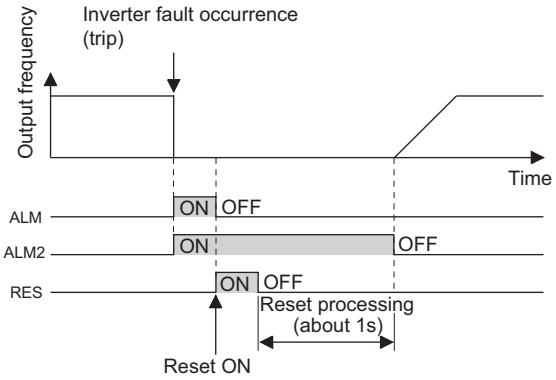

- The Fault (ALM, ALM2) signals are output when the inverter protective function is activated.
- The ALM2 signal stays ON during the reset period after the fault occurs.
- To use the ALM2 signal, set "94 (positive logic) or 194 (negative logic)" in any of **Pr.190 to Pr.196 (output terminal function selection)** to assign the function to the output terminal.
- The ALM signal is assigned to the A1B1C1 contacts in the initial status.

NOTE

- For the inverter fault details, refer to page 535.

◆Input MC shutoff signal (Y91)

- The Fault output 3 (Y91) signal is output when a fault originating in the inverter circuit or a connection fault occurs.
- To use the Y91 signal, set "91 (positive logic) or 191 (negative logic)" in any of **Pr.190 to Pr.196 (output terminal function selection)** to assign the function to the output terminal.
- The following table shows the faults that output the Y91 signal. (For the fault details, refer to page 535.)

Fault record
Inrush current limit circuit fault (E.IOH)
CPU fault (E.CPU)
CPU fault (E.6)
CPU fault (E.7)
Parameter storage device fault (E.PE)
Parameter storage device fault (E.PE2)
24 VDC power fault (E.P24)
Operation panel power supply short circuit/RS-485 terminals power supply short circuit (E.CTE)
Output side earth (ground) fault overcurrent (E.GF)
Output phase loss (E.LF)
Brake transistor alarm detection (E.BE)
Internal circuit fault (E.13/E.PBT)

Parameters referred to

Pr.13 Starting frequency page 197, page 198

Pr.76 Fault code output selection page 302

5.8.7 Output frequency detection

The inverter output frequency is detected and output as output signals.

Pr.	Name	Initial value		Setting range	Description
		FM	CA		
41 **M441**	**Up-to-frequency sensitivity**	10%		0 to 100%	Set the level where the SU signal turns ON.
42 **M442**	**Output frequency detection**	6 Hz		0 to 590 Hz	Set the frequency where the FU signal turns ON.
43 **M443**	**Output frequency detection for reverse rotation**	9999		0 to 590 Hz	Set the frequency where the FU signal turns ON in reverse rotation.
				9999	Same as the **Pr.42** setting.
50 **M444**	**Second output frequency detection**	30 Hz		0 to 590 Hz	Set the frequency where the FU2 signal turns ON.
870 **M400**	**Speed detection hysteresis**	0 Hz		0 to 5 Hz	Set the hysteresis width for the detected frequency.

◆Output up-to-frequency sensitivity (SU signal, Pr.41)

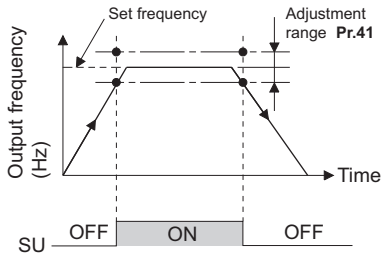

- Up to frequency (SU) is output when the output frequency reaches the set frequency.
- The **Pr.41** value can be adjusted within the range ±1% to ±100% considering the set frequency as 100%.
- This parameter can be used to check that the set frequency has been reached, and provide signals such as the operation start signal for related equipment.

◆Output frequency detection (FU signal, FU2 signal, Pr.42, Pr.43, Pr.50)

- Output frequency detection (FU) is output when the output frequency reaches the **Pr.42** setting or higher.
- The FU (FU2) signals can be used for electromagnetic brake operation, opening, etc.
- Frequency detection that is dedicated to reverse rotation can be set by setting the detection frequency in **Pr.43**. This is useful for changing the timing of the electromagnetic brake operation during forward rotation (lifting) and reverse rotation (lowering) in operations such as lift operation.
- When **Pr.43** ≠ "9999", forward rotation uses the **Pr.42** setting and reverse rotation uses the **Pr.43** setting.
- When outputting a frequency detection signal separately from the FU signal, set the detection frequency in **Pr.50**. When the output frequency reaches the **Pr.50** setting or higher, the FU2 signal is output.

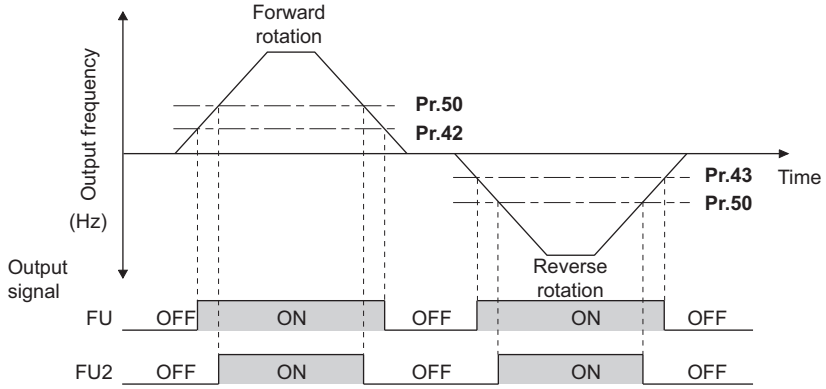

- For each signal, refer to the following table and assign the function by **Pr.190 to Pr.196 (output terminal function selection)**.

Pr.	Output signal	Pr.190 to Pr.196 settings	
		Positive logic	Negative logic
42, 43	FU	4	104
50	FU2	5	105

◆Speed detection hysteresis (Pr.870)

- This function prevents chattering of the speed detection signals. When an output frequency fluctuates, the up to frequency signal (SU) may repeat ON/OFF (chatter).
  Setting hysteresis to the detected frequency prevents chattering of these signals.

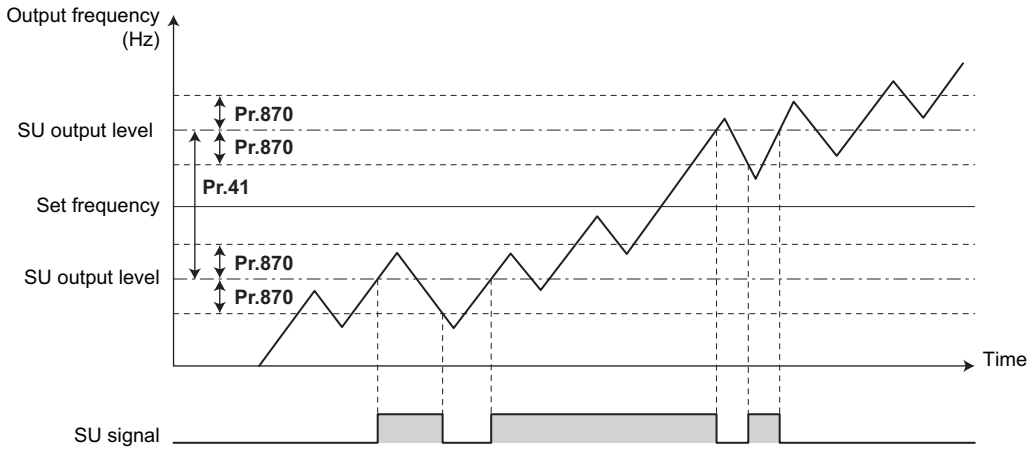

NOTE

- In the initial setting, the FU signal is assigned to the terminal FU, and the SU signal is assigned to the terminal SU.
- All signals turn OFF during DC injection brake, tuning at start-up.
- Each signal's reference frequency differs by the control method.

Control method	Compared frequency	
	FU, FU2	SU
V/F control	Output frequency	Output frequency
Advanced magnetic flux vector control	Output frequency before the slip compensation	Output frequency before the slip compensation
PM motor control	Frequency command value	Estimated frequency (actual motor speed)

- Setting a higher value in **Pr.870** slows the response of frequency detection signals (SU).
- Changing the terminal assignment using **Pr.190 to Pr.196 (output terminal function selection)** may affect the other functions. Set parameters after confirming the function of each terminal.

Parameters referred to

Pr.190 to Pr.196 (output terminal function selection) ☞ page 288

5.8.8 Output current detection function

The output current during inverter running can be detected and output to the output terminal.

Pr.	Name	Initial value		Setting range	Description
		FM	CA		
150 **M460**	**Output current detection level**	120%	110%	0 to 220%	Set the output current detection level. 100% is the rated inverter current.
151 **M461**	**Output current detection signal delay time**	0 s		0 to 10 s	Set the output current detection time. Set the time from when the output current reaches the setting or higher until the output current detection (Y12) signal is output.
152 **M462**	**Zero current detection level**	5%		0 to 220%	Set the zero current detection level. The rated inverter current is regarded as 100%.
153 **M463**	**Zero current detection time**	0.5 s		0 to 10 s	Set the time from when the output current drops to the **Pr.152** setting or lower until the zero current detection (Y13) signal is output.
166 **M433**	**Output current detection signal retention time**	0.1 s		0 to 10 s	Set the retention time when the Y12 signal is ON.
				9999	Retain the Y12 signal ON status. The signal is turned OFF at the next start.
167 **M464**	**Output current detection operation selection**	0		0, 1, 10, 11	Select the operation when Y12 and Y13 signals turn ON.

◆Output current detection (Y12 signal, Pr.150, Pr.151, Pr.166, Pr.167)

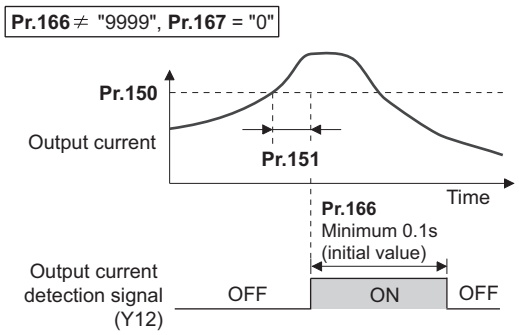

- The output current detection function can be used for purposes such as overtorque detection.
- If the output during inverter running remains higher than the **Pr.150** setting for the time set in **Pr.151** or longer, the Output current detection (Y12) signal is output from the inverter's open collector or relay output terminal.
- When the Y12 signal turns ON, the ON state is retained for the time set in **Pr.166**.
- When **Pr.166** = "9999", the ON state is retained until the next start.
- Setting **Pr.167** = "1" while the Y12 signal is ON does not cause E.CDO. The **Pr.167** setting becomes valid after the Y12 signal is turned OFF.
- For the Y12 signal, set "12 (positive logic) or 112 (negative logic)" in any of **Pr.190 to Pr.196 (output terminal function selection)** to assign the function to the output terminal.
- Select whether the inverter output stops or the inverter operation continues when Y12 signal turns ON, by setting **Pr.167**.

Pr.167 setting	When Y12 signal turns ON	When Y13 signal truns ON
0 (Initial value)	Continuous operation	Continuous operation
1	Inverter trip (E.CDO)	Continuous operation
10	Continuous operation	Inverter trip (E.CDO)
11	Inverter trip (E.CDO)	Inverter trip (E.CDO)

◆Zero current detection (Y13 signal, Pr.152, Pr.153)

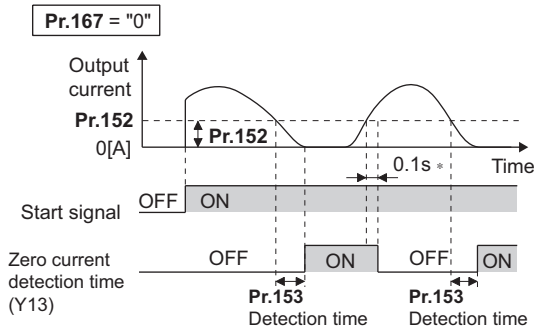

* When the output is restored to the **Pr.152** level, the Y13 signal is turned OFF after 0.1 s.

- If the output during inverter running remains higher than the **Pr.152** setting for the time set in **Pr.153** or longer, the Zero current detection (Y13) signal is output from the inverter's open collector or relay output terminal.
- Once turned ON, the zero current detection time signal (Y13) is held ON for at least 0.1s.
- If the inverter output current drops to "0", because torque is not generated, slippage due to gravity may occur, especially in a lift application.
  To prevent this, the Y13 signal, which closes the mechanical brake at "0" output current, can be output from the inverter.
- For the Y13 signal, set "13 (positive logic) or 113 (negative logic)" in any of **Pr.190 to Pr.196 (output terminal function selection)** to assign the function to the output terminal.
- Select whether the inverter output stops or the inverter operation continues when Y13 signal turns ON, by setting **Pr.167**.

NOTE

- The signals are enabled even when online or offline auto tuning is being executed.
- The response time of the Y12 and Y13 signals is approximately 0.1 s. Note that the response time varies with the load.
- When **Pr.152** = "0", detection is disabled.
- Changing the terminal assignment using **Pr.190 to Pr.196 (output terminal function selection)** may affect the other functions. Set parameters after confirming the function of each terminal.

Caution

- **The zero current detection level setting should not be too low, and the zero current detection time setting not too long. When the output current is low and torque is not generated, the detection signal may not be output.**
- **Even when using the zero current detection signal, a safety backup such as an emergency brake must be provided to prevent hazardous machine or equipment conditions.**

Parameters referred to

Online auto tuning ☞ page 359
Offline auto tuning ☞ page 341, page 351
Pr.190 to Pr.196 (output terminal function selection) ☞ page 288

5.8.9 Output torque detection Magnetic flux PM

A signal is output when the motor torque is higher than the setting.
This function can be used for electromagnetic brake operation, open signal, etc.

Pr.	Name	Initial value	Setting range	Description
864 **M470**	**Torque detection**	150%	0 to 400%	Set the torque value where the TU signal turns ON.

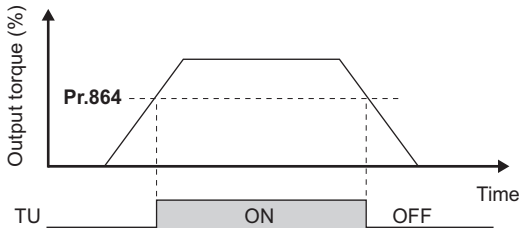

- The Torque detection (TU) signal turns ON when the output torque reaches the detection torque value set in **Pr.864** or higher.
- **Pr.864** is not available under V/F control.
- For the TU signal, set "35 (positive logic) or 135 (negative logic)" in one of **Pr.190 to Pr.196 (output terminal function selection)** to assign the function to the output terminal.

NOTE

- Changing the terminal assignment using **Pr.190 to Pr.196 (output terminal function selection)** may affect the other functions. Set parameters after confirming the function of each terminal.

Parameters referred to

Pr.190 to Pr.196 (output terminal function selection) page 288

5.8.10 Remote output function

The inverter output signals can be turned ON/OFF like the remote output terminals of a programmable controller.

Pr.	Name	Initial value	Setting range	Description	
495 **M500**	**Remote output selection**	0	0	Remote output data is cleared when the power supply is turned OFF	Remote output data is cleared during an inverter reset
			1	Remote output data is retained when the power supply is turned OFF	
			10	Remote output data is cleared when the power supply is turned OFF	Remote output data is retained during an inverter reset
			11	Remote output data is retained when the power supply is turned OFF	
496 **M501**	**Remote output data 1**	0	0 to 4095	Set values for the bits corresponding to each output terminal of the inverter output terminal. (Refer to the diagram below.)	
497 **M502**	**Remote output data 2**	0	0 to 4095	Set values for the bits corresponding to each output terminal of options FR-A8AY and FR-A8AR. (Refer to the diagram below.)	

◆Remote output setting (REM signal, Pr.496, Pr.497)

Pr.496

b11											b0
*1	*1	*1	*1	*1	ABC2	ABC1	FU	OL	IPF	SU	RUN

Pr.497

b11											b0
*1	*1	RA3 *3	RA2 *3	RA1 *3	Y6 *2	Y5 *2	Y4 *2	Y3 *2	Y2 *2	Y1 *2	Y0 *2

*1 Any value.
*2 Y0 to Y6 are available when the extension output option (FR-A8AY) is installed.
*3 RA1 to RA3 are available hen the relay output option (FR-A8AR) is installed.

- The output terminal can be turned ON/OFF with the **Pr.496 and Pr.497** settings. ON/OFF control can be performed for the remote output terminal via the PU connector, RS-485 terminals and communication option.
- To assign the Remote output (REM) signal to the terminal to be used for remote output, set "96 (positive logic) or 196 (negative logic)" in any of **Pr.190 to Pr.196 (output terminal function selection)**.
- Refer to the left figure, and set "1" in the terminal bit (terminal with the REM signal assigned) of **Pr.496 or Pr.497** to turn ON the output terminal (OFF when using negative logic). Set "0" to turn OFF the output terminal (ON when using negative logic).
- For example, when **Pr.190 RUN terminal function selection** = "96" (positive logic) and "1" (H01) is set in **Pr.496**, the terminal RUN turns ON.

◆Remote output data retention (REM signal, Pr.495)

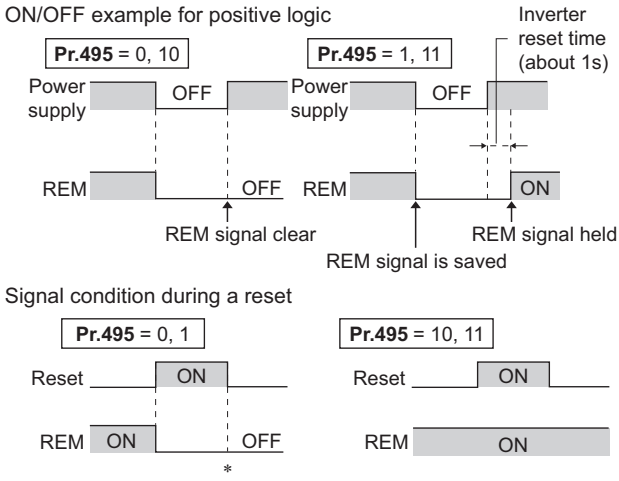

* When **Pr.495** = "1", the signal condition saved in EEPROM (condition of the last power OFF) is applied.

- If the power supply is reset (including a power failure) while **Pr.495** = "0 (initial value) or 10", t the REM signal output is cleared. (The terminal ON/OFF status is determined by the settings in **Pr.190 to Pr.196**.) "0" is also set in **Pr.496 and Pr.497**.
- When **Pr.495** = "1 or 11", the remote output data is saved in EEPROM before the power supply is turned OFF. This means that the signal output after power restoration is the same as before the power supply was turned OFF. However, when **Pr.495** = "1", the data is not saved during an inverter reset (terminal reset, reset request via communication).
- When **Pr.495** = "10 or 11", the signal before the reset is saved even during an inverter reset.

NOTE

- The output terminals that have not been assigned with a REM signal by **Pr.190 to Pr.196** do not turn ON/OFF even if "0 or 1" is set in the terminal bits of **Pr.496 and Pr.497**. (ON/OFF is performed with the assigned functions.)
- When **Pr.495** = "1 or 11" (remote output data retention at power OFF), take measures such as connecting R1/L11 with P/+, and S1/L21 with N/- so that the control power is retained. If the control power is not retained, the output signal after turning ON the power is not guaranteed to work. When connecting the high power factor converter (FR-HC2) or the converter unit (FR-CC2), assign the instantaneous power failure detection (X11) signal to an input terminal to input the IPF signal from the FR-HC2/FR-CC2 to the terminal for X11 signal.

Parameters referred to

Pr.190 to Pr.196 (output terminal function selection) page 288

5.8.11 Analog remote output function

An analog value can be output from the analog output terminal.

Pr.	Name	Initial value	Setting range	Description	
655 M530	**Analog remote output selection**	0	0	Remote output data is cleared when the power supply is turned OFF	Remote output data is cleared during an inverter reset
			1	Remote output data is retained when the power supply is turned OFF	
			10	Remote output data is cleared when the power supply is turned OFF	Remote output data is retained during an inverter reset
			11	Remote output data is retained when the power supply is turned OFF	
656 M531	**Analog remote output 1**	1000%	800 to 1200%	Value output from the terminal set as "87" in terminal function selection **(Pr.54, Pr.158)**	Set the analog value for outputting from the analog output terminals FM/CA and AM and option FR-A8AY.
657 M532	**Analog remote output 2**	1000%	800 to 1200%	Value output from the terminal set as "88" in terminal function selection **(Pr.54, Pr.158)**	
658 M533	**Analog remote output 3**	1000%	800 to 1200%	Value output from the terminal set as "89" in terminal function selection **(Pr.54, Pr.158)**	
659 M534	**Analog remote output 4**	1000%	800 to 1200%	Value output from the terminal set as "90" in terminal function selection **(Pr.54, Pr.158)**	

◆Analog remote output (Pr.656 to Pr.659)

- The terminals FM/CA, AM and the analog output terminal of the option FR-A8AY can output the values set in **Pr.656** to **Pr.659 (Analog remote output)**.
- When **Pr.54 FM/CA terminal function selection** = "87, 88, 89, or 90" (remote output), the FM type inverter can output a pulse train from the terminal FM.
- For FM output (**Pr.291 Pulse train I/O selection** = "0 (initial value) or 1"):
  Terminal FM output [pulses/s] = 1440[Hz] × (analog remote output value - 1000)/100
  Where the output range is 0 to 2400 pulses/s.
- For high-speed pulse output (**Pr.291 Pulse train I/O selection** = "10, 11, 20, or 21"):
  Terminal FM output [pulses/s] = 50K[Hz] × (analog remote output value - 1000)/100
  Where the output range is 0 to 55K pulses/s.

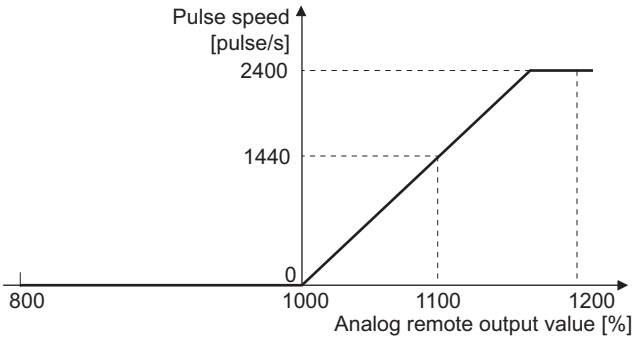

Terminal FM (FM output)

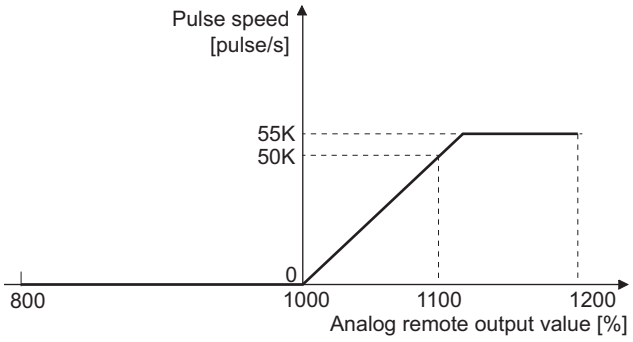

Terminal FM (High-speed pulse train output)

- When **Pr.54 FM/CA terminal function selection** = "87, 88, 89, or 90" (remote output), the CA type inverter can output any analog current from the terminal CA.

- Terminal CA output [mA] = 20 [mA] × (analog remote output value - 1000)/100
  Where the output range is 0 to 20 mA.

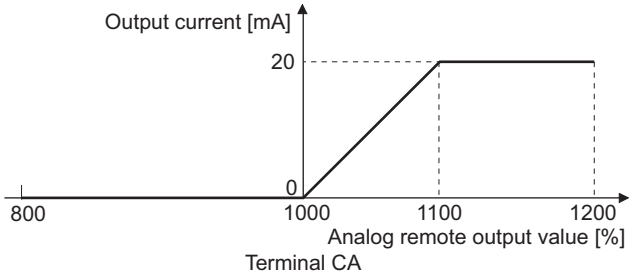

- When **Pr.158 AM terminal function selection** = "87, 88, 89, or 90", an analog voltage can be output from the terminal AM.
- Terminal AM output [V] = 10 [V] × (analog remote output value - 1000)/100
  The output range is -10 V to +10 V regardless of the **Pr.290 Monitor negative output selection** setting.

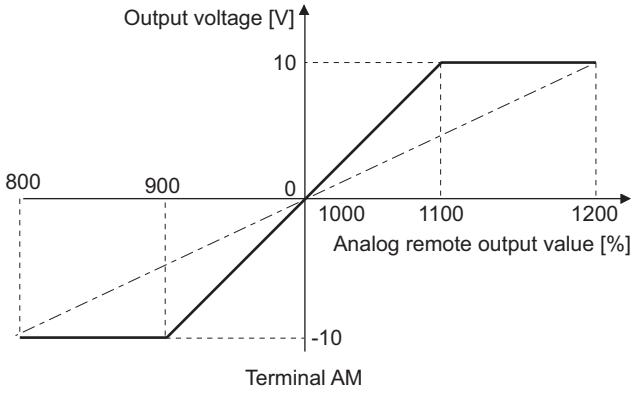

◆Analog remote output data retention (Pr.655)

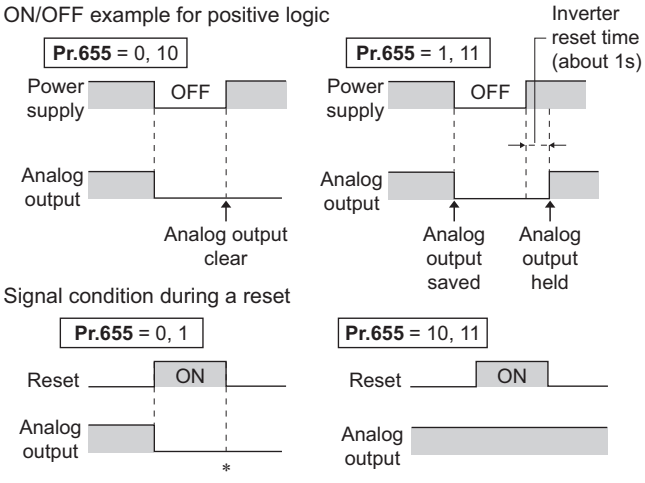

∗ When **Pr.655** = "1", the signal condition saved in EEPROM (condition of the last power OFF) is applied.

- When the power supply is reset (including a power failure) while **Pr.655 Analog remote output selection** = "0" (initial value) or 10" and , the remote analog output (**Pr.656 to Pr.659**) returns to its initial value (1000%).
- When **Pr.655** = "1 or 11", the analog remote output data is saved in EEPROM before the power supply is turned OFF. This means that the analog value output after power restoration is the same as before the power supply was turned OFF. However, when **Pr.655** = "1", the data is not saved during an inverter reset (terminal reset, reset request via communication).
- When **Pr.655** = "10 or 11", the analog output before the reset is saved even during an inverter reset.
- When the setting in **Pr.655** is changed, the remote analog output (**Pr.656 to Pr.659**) returns to its initial value (1000%).

NOTE

- When **Pr.655** = "1 or 11" (remote analog output data retention at power OFF), take measures such as connecting R1/L11 with P/+, and S1/L21 with N/- so that the control power is retained (While power is supplied to R/L1, S/L2 and T/L3). If the control power is not retained, the analog output after turning ON the power is not guaranteed to work. When connecting the high power factor converter FR-HC2, assign the instantaneous power failure detection (X11) signal to an input terminal to input the IPF signal from the FR-HC2 to the terminal for X11 signal.

Parameters referred to

Pr.54 FM/CA terminal function selection page 273
Pr.158 AM terminal function selection page 273
Pr.290 Monitor negative output selection page 273
Pr.291 Pulse train I/O selection page 273

5.8.12 Fault code output selection

When a fault occurs, the corresponding data can be output as a 4-bit digital signal using via an open collector output terminal.
The fault code can be read using an input module of programmable controller, etc.

Pr.	Name	Initial value	Setting range	Description
76 **M510**	**Fault code output selection**	0	0	Without fault code output
			1	With fault code output **(Refer to the table below.)**
			2	Fault code is output only when a fault occurs. **(Refer to the table below.)**

- Fault codes can be output to the output terminals by setting **Pr.76 Fault code output selection** = "1 or 2".
- When the setting is "2", a fault code is only output when a fault occurs. In normal operation the terminal outputs the signal assigned in **Pr.191 to Pr.194 (output terminal function selection)**.
- The fault codes that can be output are shown in the table below. (0: Output transistor OFF, 1: Output transistor ON)

Operation panel indication (FR-DU08)	Output terminal operation				Fault code
	SU	IPF	OL	FU	
Normal *1	0	0	0	0	0
E.OC1	0	0	0	1	1
E.OC2	0	0	1	0	2
E.OC3	0	0	1	1	3
E.OV1 to E.OV3	0	1	0	0	4
E.THM	0	1	0	1	5
E.THT	0	1	1	0	6
E.IPF	0	1	1	1	7
E.UVT	1	0	0	0	8
E.FIN	1	0	0	1	9
E.BE	1	0	1	0	A
E. GF	1	0	1	1	B
E.OHT	1	1	0	0	C
E.OLT	1	1	0	1	D
E.OPT E.OP1	1	1	1	0	E
Other than the above	1	1	1	1	F

*1 When **Pr.76** = "2", the terminal outputs the signal assigned by **Pr.191 to Pr.194**.

NOTE

- If an error occurs while **Pr.76** ≠ "0", the output terminals SU, IPF, OL, and FU output the signals in the table above regardless of the settings in **Pr.191 to Pr.194 (output terminal function selection)**. Take caution when controlling the inverter with the output signals set by **Pr.191 to Pr.194**.

Parameters referred to

Pr.190 to Pr.196 (output terminal function selection) page 288

5.8.13 Pulse train output of output power

After power ON or inverter reset, output signal (Y79 signal) is output in pulses every time accumulated output power, which is counted after the **Pr.799 Pulse increment setting for output power** is set, reaches the specified value (or its integral multiples).

Pr.	Name	Initial value	Setting range	Description
799 **M520**	**Pulse increment setting for output power**	1 kWh	0.1 kWh, 1 kWh, 10 kWh, 100 kWh, 1000 kWh	Pulse train output of output power (Y79) is output in pulses at every output power (kWh) that is specified.

◆Pulse increment setting for output power (Y79 signal, Pr.799)

- After power ON or inverter reset, output signal (Y79 signal) is output in pulses every time accumulated output power of the inverter exceeds **Pr.799 Pulse increment setting for output power**.
- The inverter continues to count the output power at retry function or when automatic restart after instantaneous power failure function works without power OFF of output power (power failure that is too short to cause an inverter reset), and it does not reset the count.
- If power failure occurs, output power is counted from 0kWh again.
- Assign pulse output of output power (Y79: setting value 79 (positive logic), 179 (negative logic)) to any of **Pr.190 to Pr.196 (Output terminal function selection)**.

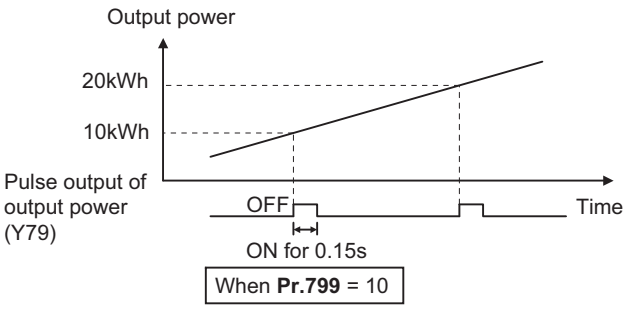

NOTE

- Because the accumulated data in the inverter is cleared when control power is lost by power failure or at an inverter reset, the value on the monitor cannot be used to charge electricity bill.
- Changing the terminal assignment using **Pr. 190 to Pr. 196 (output terminal function selection)** may affect the other functions. Set parameters after confirming the function of each terminal. (Refer to page 288)
- In an application where the pulse outputs are frequently turned ON/OFF, do not assign the signal to the terminal ABC1 or ABC2.
  Otherwise, the life of the relay contact decreases.

Parameters referred to

Pr.190 to Pr.196 (output terminal function selection) ☞ page 288

5.8.14 Detection of control circuit temperature

The temperature of the control circuit board can be monitored, and a signal can be output according to a predetermined temperature setting.

Pr.	Name	Initial value	Setting range	Description
663 **M060**	**Control circuit temperature signal output level**	0°C	0 to 100°C	Set the temperature where the Y207 signal turns ON.

◆Control circuit temperature monitor

- The operation panel, terminal FM/CA, or terminal AM can be used to monitor the temperature of the control circuit board within the range of 0 to 100°C.
- When monitoring with the operation panel or terminal AM, the range becomes -20 to 100°C by setting the display/output with a minus sign in **Pr.290 Monitor negative output selection**.

◆Control circuit temperature detection (Pr.663, Y207 signal)

- The Y207 signal can be output when the control circuit temperature reaches the **Pr.663** setting or higher.
- For the Y207 signal, set "207 (positive logic) or 307 (negative logic)" in one of **Pr.190 to Pr.196 (output terminal function selection)** to assign the function to the output terminal.

NOTE

- The Y207 signal is turned OFF when the control circuit temperature becomes 5°C or more lower than the **Pr.663** setting.
- Changing the terminal assignment using **Pr.190 to Pr.196 (output terminal function selection)** may affect the other functions. Set parameters after confirming the function of each terminal.

Parameters referred to

Pr.54 FM/CA terminal function selection ☞ page 273
Pr.158 AM terminal function selection ☞ page 273
Pr.190 to Pr.196 (output terminal function selection) ☞ page 288
Pr.290 Monitor negative output selection ☞ page 273

5.9 (T) Multi-Function Input Terminal Parameters

Purpose	Parameter to set			Refer to page
To inverse the rotation direction with the voltage/current analog input selection (terminals 1, 2, and 4)	Analog input selection	P.T000, P.T001	Pr.73, Pr.267	306
To assign functions to analog input terminals	Terminal 1 and terminal 4 function assignment	P.T010, P.T040	Pr.858, Pr.868	310
To adjust the main speed by the analog auxiliary input	Analog auxiliary input and compensation (addition compensation and override functions)	P.T021, P.T031, P.T050, P.T051	Pr.73, Pr.242, Pr.243, Pr.252, Pr.253	311
To eliminate noise on analog inputs	Analog input filter	P.T002, P.T003, P.T005, P.T007	Pr.74, Pr.822, Pr.832, Pr.849	313
To adjust analog input frequency/ voltage (current) (calibration)	Frequency setting voltage (current) bias and gain	P.T100 to P.T103, P.T200 to P.T203, P.T400 to P.T403, P.M043	Pr.125, Pr.126, Pr.241, C2 to C7 (Pr.902 to Pr.905), C12 to C15 (Pr.917 to Pr.918)	314
To adjust voltage (current) of stall prevention operation level (calibration)	Stall prevention operation level setting voltage (current) bias and gain	P.T110 to P.T113, P.T410 to P.T413, P.M043	Pr.241, C16 to C19 (Pr.919 to Pr.920), C38 to C41 (Pr.932 to Pr.933)	320
To continue operating at analog current input loss	4-mA input check	P.T052 to P.T054	Pr.573, Pr.777, Pr.778	325
To assign functions to input terminals	Input terminal function selection	P.T700 to P.T711, P.T740	Pr.178 to Pr.189, Pr.699	329
To change the input specification (NO/NC contact) of input signals	Output stop signal (MRS) input selection	P.T720	Pr.17	332
	Inverter run enable signal (X10) input selection	P.T721	Pr.599	510
	Power failure stop external signal (X48) input selection	P.T722	Pr.606	429
To enable the second function only during the constant speed	RT signal application period selection	P.T730	Pr.155	333
To assign start and forward/ reverse commands to different signals	Start signal (STF/STR) operation selection	P.G106	Pr.250	335

5.9.1 Analog input selection

The functions to switch the analog input terminal specifications, override function, forward/reverse rotation by the input signal polarity are selectable.

Pr.	Name	Initial value	Setting range		Description
73 **T000**	**Analog input selection**	1	0 to 5, 10 to 15	Switch 1 - OFF (initial status)	The terminal 2 input specification (0 to 5 V, 0 to 10 V, 0 to 20 mA) and terminal 1 input specification (0 to ±5 V, 0 to ±10 V) are selectable. Also the override and reversible operation settings are selectable.
			6, 7, 16, 17	Switch 1 - ON	
267 **T001**	**Terminal 4 input selection**	0	0	Switch 2 - ON (initial status)	Terminal 4 input, 4 to 20 mA
			1	Switch 2 - OFF	Terminal 4 input, 0 to 5 V
			2		Terminal 4 input, 0 to 10 V

◆Analog input specification selection

- Concerning the terminals 2 and 4 used for analog input, the voltage input (0 to 5 V, 0 to 10 V) and current input (0 to 20 mA) are selectable. To change the input specification, change the parameters **(Pr.73, Pr.267)** and voltage/current input switch settings (switches 1, 2).

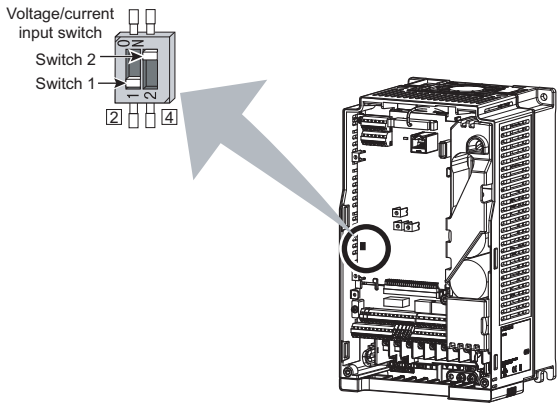

Switch 1: Terminal 2 input
ON: Current input
OFF: Voltage input (initial status)

Switch 2: Terminal 4 input
ON: Current input (initial status)
OFF: Voltage input

- The terminal 2/4 rating specifications change depending on the voltage/current input switch settings.
  Voltage input: input resistance 10 kΩ ±1 kΩ, permissible maximum voltage 20 VDC
  Current input: input resistance 245 Ω ±5 Ω, permissible maximum current 30 mA
- Correctly set **Pr.73, Pr.267** and voltage/current input switch settings so that the analog signal appropriate for the settings is input. The incorrect settings shown in the table below cause a failure. Other incorrect settings result in an incorrect operation.

Setting causing a failure		Operation
Switch setting	**Terminal input**	
ON (current input)	Voltage input	Causes an analog signal output circuit failure in an external device (due to increased loads on the signal output circuit of the external device).
OFF (voltage input)	Current input	Causes an input circuit failure in the inverter (due to an increased output power in the analog signal output circuit of an external device).

NOTE

- Check the voltage/current input switch number indication before setting, because it is different from the FR-F700(P) series switch number indication.

- Set the **Pr.73** and voltage/current input switch settings according to the table below. ( ) indicates the main speed setting.)

Pr.73 setting	Terminal 2 input	Switch 1	Terminal 1 input	Compensation input terminal compensation method	Polarity reversible
0	0 to 10 V	OFF	0 to ±10 V	Terminal 1 Addition compensation	Not applied (state in which a negative polarity frequency command signal is not accepted)
1 (initial value)	0 to 5 V	OFF	0 to ±10 V		
2	0 to 10 V	OFF	0 to ±5 V		
3	0 to 5 V	OFF	0 to ±5 V		
4	0 to 10 V	OFF	0 to ±10 V	Terminal 2 Override	
5	0 to 5 V	OFF	0 to ±5 V		
6	0 to 20 mA	ON	0 to ±10 V	Terminal 1 Addition compensation	Applied
7	0 to 20 mA	ON	0 to ±5 V		
10	0 to 10 V	OFF	0 to ±10 V		
11	0 to 5 V	OFF	0 to ±10 V		
12	0 to 10 V	OFF	0 to ±5 V		
13	0 to 5 V	OFF	0 to ±5 V		
14	0 to 10 V	OFF	0 to ±10 V	Terminal 2 Override	
15	0 to 5 V	OFF	0 to ±5 V		
16	0 to 20 mA	ON	0 to ±10 V	Terminal 1 Addition compensation	
17	0 to 20 mA	ON	0 to ±5 V		

- Turning the Terminal 4 input selection(AU) signal ON sets terminal 4 to the main speed. With this setting, the main speed setting terminal is invalidated.
- Set the **Pr.267** and voltage/current input switch setting according to the table below.

Pr.267 setting	Terminal 4 input	Switch 2
0 (initial value)	4 to 20 mA	ON
1	0 to 5 V	OFF
2	0 to 10 V	OFF

NOTE

- To enable the terminal 4, turn the AU signal ON.
- Set the parameters and the switch settings so that they agree. Incorrect setting may cause a fault, failure or malfunction.
- Terminal 1 (frequency setting auxiliary input) is added to the terminal 2 or 4 main speed setting signal.
- When the override setting is selected, terminal 1 or 4 is set to the main speed setting, and terminal 2 is set to the override signal (0 to 5 V or 0 to 10 V, and 50% to 150%). (If the main speed of terminal 1 or 4 is not input, the compensation by terminal 2 is disabled.)
- Use **Pr.125 (Pr.126) (frequency setting gain)** to change the maximum output frequency at the input of the maximum output frequency command voltage (current). At this time, the command voltage (current) need not be input.
  The acceleration/deceleration time inclines up/down to the acceleration/deceleration reference frequency, so it is not affected by change of **Pr.73**.
- When **Pr.858 Terminal 4 function assignment and Pr.868 Terminal 1 function assignment** = "4", the terminal 1 and terminal 4 values are set to the stall prevention operation level.
- After the voltage/current input signal is switched with **Pr.73, Pr.267**, and voltage/current input switches, be sure to let calibration performed.
- When **Pr.561 PTC thermistor protection level** ≠ "9999", terminal 2 does not function as an analog frequency command.

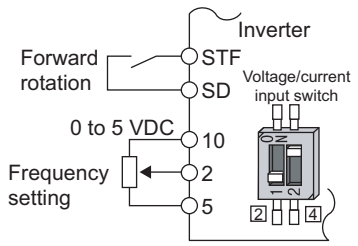

Connection diagram using terminal 2 (0 to 5 VDC)

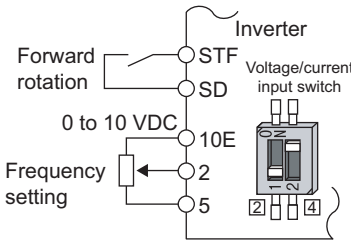

Connection diagram using terminal 2 (0 to 10 VDC)

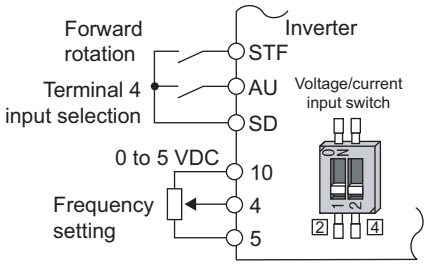

Connection diagram using terminal 4 (0 to 5 VDC)

◆To run with an analog input voltage

- Concerning the frequency setting signal, input 0 to 5 VDC (or 0 to 10 VDC) to terminals 2 and 5. The 5 V (10 V) input is the maximum output frequency.
- The power supply 5 V (10 V) can be input by either using the internal power supply or preparing an external power supply. The internal power source is 5 VDC output between terminals 10 and 5, and 10 VDC output between terminals 10E and 5.

Terminal	Inverter internal power source voltage	Frequency setting resolution	Pr.73 (terminal 2 input voltage)
10	5 VDC	0.030 Hz/60 Hz	0 to 5 VDC input
10E	10 VDC	0.015 Hz/60 Hz	0 to 10 VDC input

- To supply the 10 VDC input to terminal 2, set "0, 2, 4, 10, 12, or 14" in **Pr.73**. (The initial value is 0 to 5 V.)
- Setting "1 (0 to 5 VDC)" or "2 (0 to 10 VDC)" in **Pr.267** and turning the voltage/current input switches OFF sets the terminal 4 to the voltage input specification. Turning ON the AU signal activates terminal 4 input.

NOTE

- The wiring length of the terminal 10, 2, 5 should be 30 m at maximum.

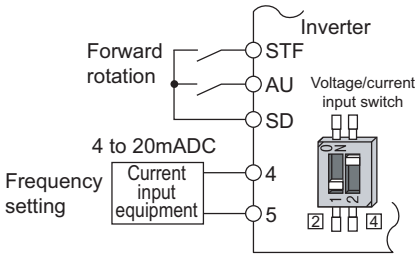

Connection diagram using terminal 4 (4 to 20mADC)

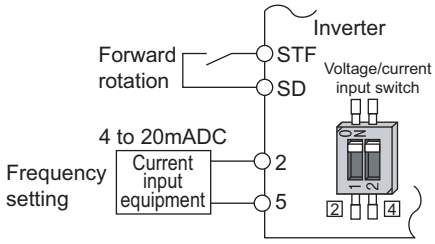

Connection diagram using terminal 2 (4 to 20mADC)

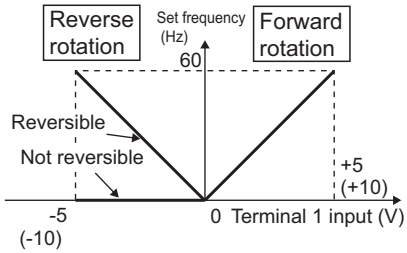

Compensation input characteristics when STF is ON

◆Running with analog input current

- For constant pressure or temperature control with fans, pumps, or other devices, automatic operation is available by setting the regulator output signal 4 to 20 mADC to between terminals 4 and 5.
- To use the terminal 4, the AU signal needs to be turned ON.

- Setting "6, 7, 16, or 17" in **Pr.73** and turning the voltage/current input switches ON sets terminal 2 to the current input specification. Concerning the settings, the AU signal does not need to be turned ON.

◆To perform forward/reverse rotation with the analog input (polarity reversible operation)

- Setting **Pr.73** to a value of "10 to 17" enables the polarity reversible operation.
- Setting ±input (0 to ±5 V or 0 to ±10 V) to the terminal 1 allows the operation of forward/reverse rotation by the polarity.

Parameters referred to

Pr.22 Stall prevention operation level page 248

Pr.125 Terminal 2 frequency setting gain frequency, Pr.126 Terminal 4 frequency setting gain frequency page 314

Pr.252, Pr.253 override bias/gain page 311

Pr.561 PTC thermistor protection level page 225

Pr.858 Terminal 4 function assignment, Pr.868 Terminal 1 function assignment page 310

5.9.2 Analog input terminal (terminal 1, 4) function assignment

The analog input terminal 1 and terminal 4 functions are set and changeable with parameters.

Pr.	Name	Initial value	Setting range	Description
868 T010	**Terminal 1 function assignment**	0	0, 4, 9999	Select the terminal 1 function (Refer to the table below.)
858 T040	**Terminal 4 function assignment**	0	0, 4, 9999	Select the terminal 4 function (Refer to the table below.)

- Concerning terminal 1 and terminal 4 used for analog input, the frequency (speed) command, stall prevention operation level input, and other similar commands are usable. The functions available are different depending on **Pr.868 Terminal 1 function assignment, Pr.858 Terminal 4 function assignment** as shown in the table below.

Setting value	Terminal 1 function (Pr.868)	Terminal 4 function (Pr.858)
0 (initial value)	Frequency setting auxiliary	Frequency command (AU signal-ON)
4	Stall prevention operation level input	Stall prevention operation level input *1
9999	—	—

—: No function

*1 Invalid when **Pr.868** = "4"

NOTE

- When **Pr.868** = "4" (stall prevention), the terminal 4 function is enabled whether the AU terminal is turned ON/OFF.

5.9.3 Analog input compensation

Addition compensation or fixed ratio analog compensation (override) with terminal 2 set to auxiliary input is applicable to the multi-speed operation or terminal 2/terminal 4 speed setting signal (main speed).

Pr.	Name	Initial value	Setting range	Description
73 **T000**	**Analog input selection**	1	0 to 3, 6, 7, 10 to 13, 16, 17	Addition compensation
			4, 5, 14, 15	Override compensation
242 **T021**	**Terminal 1 added compensation amount (terminal 2)**	100%	0 to 100%	Set the percentage of addition compensation when terminal 2 is set to the main speed.
243 **T041**	**Terminal 1 added compensation amount (terminal 4)**	75%	0 to 100%	Set the percentage of addition compensation when terminal 4 is set to the main speed.
252 **T050**	**Override bias**	50%	0 to 200%	Set the percentage of override function bias side compensation.
253 **T051**	**Override gain**	150%	0 to 200%	Set the percentage of override function gain side compensation.

◆Addition compensation (Pr.242, Pr.243)

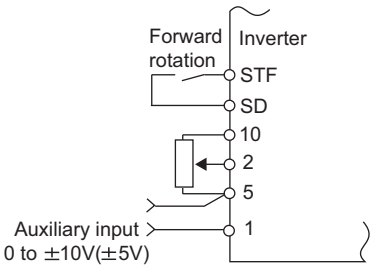

Example of addition compensation connection

- A compensation signal is addable to the main speed setting for such as synchronous or continuous speed control operation.
- Setting a value of "0 to 3, 6, 7, 10 to 13, 16, and 17" to **Pr.73** adds the voltage between terminals 1 and 5 to the voltage signal of the terminals 2 and 5.
- When **Pr.73**= "0 to 3, 6, or 7", and if the result of addition is negative, it is regarded as 0 and the operation is stopped. When **Pr.73** = "10 to 13, 16, or 17", the operation is reversed (polarity reversible operation) with STF signal ON.
- The terminal 1 compensation input is addable to the multi-speed setting or terminal 4 (initial value: 4 to 20 mA).
- The degree of addition compensation to terminal 2 is adjustable with **Pr.242**. The degree of addition compensation to terminal 4 is adjustable with **Pr.243**.

$$\text{Analog command value with use of terminal 2} = \text{terminal 2 input} + \text{terminal 1 input} \times \frac{\textbf{Pr.242}}{100\ (\%)}$$

$$\text{Analog command value with use of terminal 4} = \text{terminal 4 input} + \text{terminal 1 input} \times \frac{\textbf{Pr.243}}{100\ (\%)}$$

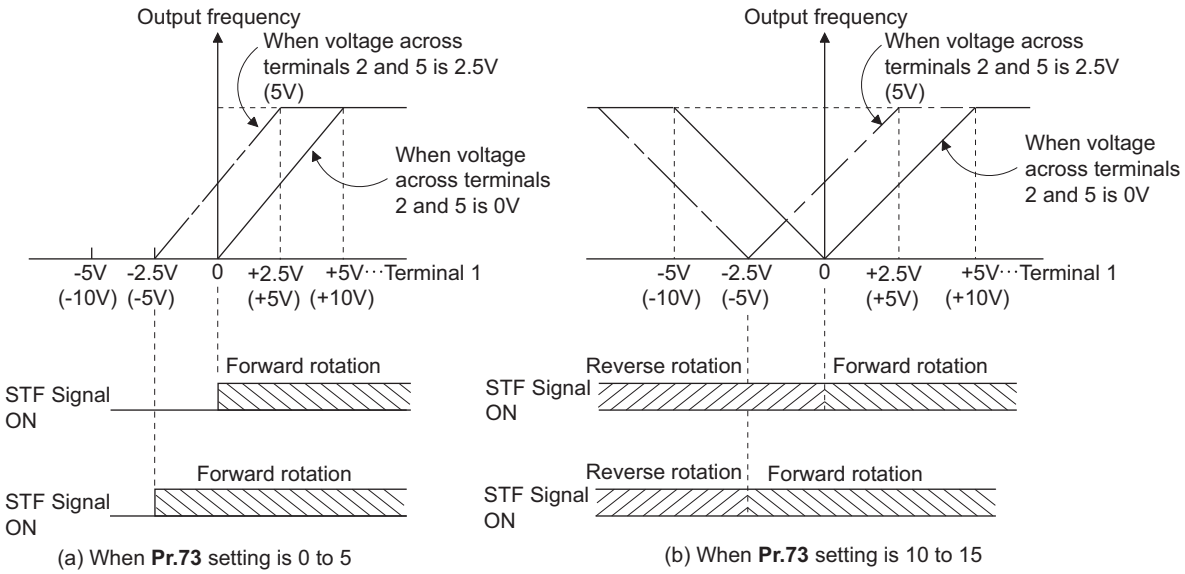

(a) When **Pr.73** setting is 0 to 5

(b) When **Pr.73** setting is 10 to 15

Auxiliary input characteristics

NOTE

- After changing the **Pr.73** setting, check the voltage/current input switch setting. Incorrect setting may cause a fault, failure or malfunction. (For the settings, refer to page 306.)

◆Override function (Pr.252, Pr.253)

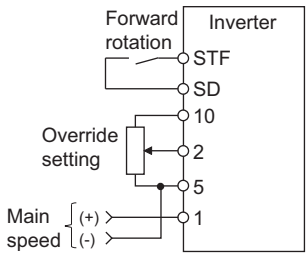

Connection example for the override function

- Use the override function to make the main speed changed at a specified rate.
- Set **Pr.73** = "4, 5, 14, or 15" to select the override function.
- When the override function is selected, terminal 1 or 4 is used for the main speed setting, and terminal 2 is used for the override signal. (if the main speed is not input to the terminal 1 or 4, the compensation by terminal 2 is disabled.)
- Specify the scope of override by using **Pr.252 and Pr.253**.
- How to calculate the set frequency for override:

$$\text{Set frequency (Hz)} = \text{main speed setting frequency (Hz)} \times \frac{\text{compensation (\%)}}{100\ (\%)}$$

Main speed setting frequency (Hz): Terminals 1 or 4 input, multi-speed setting
Compensation (%): Terminal 2 input

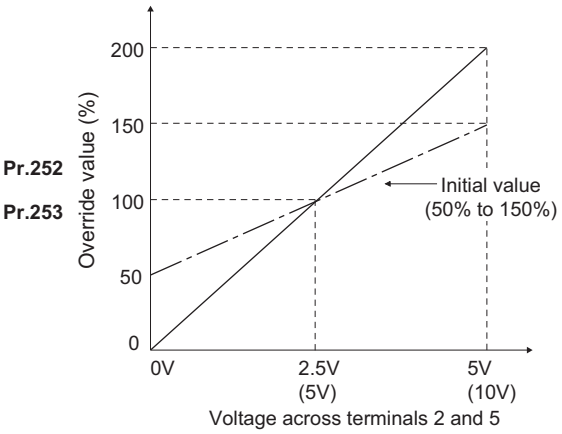

- Example) When **Pr.73** = "5"
  By the terminal 1 (main speed) and terminal 2 (auxiliary) input, the setting frequency is set as shown in the figure below.

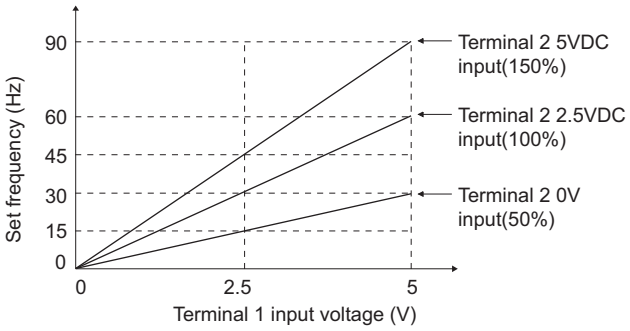

NOTE

- To use terminal 4, the AU signal needs to be turned ON.
- To make compensation input for the multi-speed operation or remote setting, set **Pr.28 Multi-speed input compensation selection** = "1" (with compensation) (initial value "0").
- After changing the **Pr.73** setting, check the voltage/current input switch setting. Incorrect setting may cause a fault, failure or malfunction. (For the settings, refer to page 306.)

Parameters referred to

Pr.28 Multi-speed input compensation selection page 222

Pr.73 Analog input selection page 306

5.9.4 Analog input responsiveness and noise elimination

The frequency command responsiveness and stability are adjustable by using the analog input (terminals 1, 2, and 4) signal.

Pr.	Name	Initial value	Setting range	Description
74 **T002**	**Input filter time constant**	1	0 to 8	The primary delay filter time constant to the analog input is selectable. The higher the value, the lower the responsiveness.
822 **T003**	**Speed setting filter 1**	9999	0 to 5 s	Set the primary delay filter time constant to the external speed command (analog input command).
			9999	Use the **Pr.74** setting.
832 **T005**	**Speed setting filter 2**	9999	0 to 5 s, 9999	Second function of **Pr.822** (enabled when the RT signal is ON)
849 **T007**	**Analog input offset adjustment**	100%	0 to 200%	Make the analog speed input (terminal 2) have an offset. This prevents the motor from rotating by noise to the analog input or another cause on the speed 0 command.

◆Analog input time constant (Pr.74)

- It is effective to eliminate noise on the frequency setting circuit.
- Increase the filter time constant if steady operation cannot be performed due to noise, etc.
  A larger setting results in slower response. (The time constant can be between 0 and 8, which are about 5 ms to 1 s.)

◆Analog speed command input time constant (Pr.822, Pr.832)

- Set the primary delay filter time constant to the external speed command (analog input command) by using **Pr.822 Speed setting filter 1**.
- To change the time constant, for example, in a case where only one inverter is used to switch between more than one motor, use **Pr.832 Speed setting filter 2**.
- **Pr.832 Speed setting filter 2** is enabled when the RT signal is ON.

◆Analog speed command input offset adjustment (Pr.849)

- This is used to set a range in which the motor is stopped for prevention of incorrect motor operation in a very low speed rotation by the analog input speed command.
- Regarding the **Pr.849 Analog input offset adjustment** value 100% is 0, the offset voltage is set as described below:
  100% < **Pr.849** ..... Positive side
  100% > **Pr.849** ..... Negative side

  The detailed calculation of the offset voltage is as described below:
  Offset voltage [V] = Voltage at the time of 100% (5 V or 10 V*1) × (**Pr.849** - 100)/100

  *1 It depends on the **Pr.73** setting.

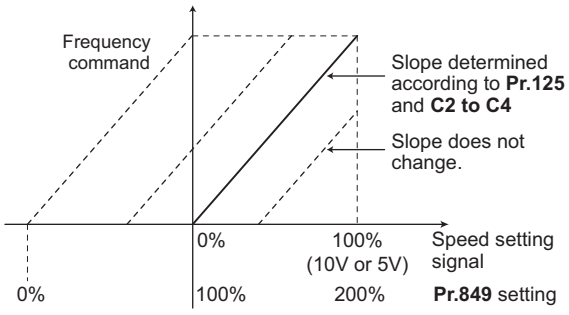

NOTE

- Under PID control, the analog input filter is invalid (no filter).

Parameters referred to

Pr.73 Analog input selection page 306

Pr.125, C2 to C4 (bias and gain of the terminal 2 frequency setting) page 314

5.9.5 Frequency setting voltage (current) bias and gain

The degree (incline) of the output frequency to the frequency setting signal (0 to 5 VDC, 0 to 10 V or 4 to 20 mA) is selectable to a desired amount.

Use **Pr.73 Analog input selection**, **Pr.267 Terminal 4 input selection**, or the voltage/current input switch to switch among input 0 to 5 VDC, 0 to 10 V, and 4 to 20 mA. (Refer to page 306)

Pr.	Name	Initial value		Setting range	Description	
		FM	CA			
C2 (902)*1 T200	Terminal 2 frequency setting bias frequency	0 Hz		0 to 590 Hz	Set the terminal 2 input bias side frequency.	
C3 (902)*1 T201	Terminal 2 frequency setting bias	0%		0 to 300%	Set the converted % on the bias side voltage (current) of the terminal 2 input.	
125 (903)*1 T202 T022	Terminal 2 frequency setting gain frequency	60 Hz	50 Hz	0 to 590 Hz	Set the terminal 2 input gain (maximum) frequency.	
C4 (903)*1 T203	Terminal 2 frequency setting gain	100%		0 to 300%	Set the converted % on the gain side voltage (current) of the terminal 2 input.	
C5 (904)*1 T400	Terminal 4 frequency setting bias frequency	0 Hz		0 to 590 Hz	Set the terminal 4 input bias side frequency.	
C6 (904)*1 T401	Terminal 4 frequency setting bias	20%		0 to 300%	Set the converted % on the bias side current (voltage) of terminal 4 input.	
126 (905)*1 T402 T042	Terminal 4 frequency setting gain frequency	60 Hz	50 Hz	0 to 590 Hz	Set the terminal 4 input gain (maximum) frequency.	
C7 (905)*1 T403	Terminal 4 frequency setting gain	100%		0 to 300%	Set the converted % on gain side current (voltage) of terminal 4 input.	
C12 (917)*1 T100	Terminal 1 bias frequency (speed)	0 Hz		0 to 590 Hz	Set the terminal 1 input bias side frequency (speed). (speed limit)	
C13 (917)*1 T101	Terminal 1 bias (speed)	0%		0 to 300%	Set the converted % on bias side voltage of terminal 1 input. (speed limit)	
C14 (918)*1 T102	Terminal 1 gain frequency (speed)	60 Hz	50 Hz	0 to 590 Hz	Set the terminal 1 input gain (maximum) frequency (speed). (speed limit)	
C15 (918)*1 T103	Terminal 1 gain (speed)	100%		0 to 300%	Set the converted % on the gain side voltage of terminal 1 input. (speed limit)	
241 M043	Analog input display unit switchover	0		0	% display	Select the unit for analog input display
				1	V/mA display	

*1 The parameter number in parentheses is the one for use with the LCD operation panel and the parameter unit.

◆Relationship between the analog input terminal function and the calibration parameter

• Calibration parameter according to the terminal 1 function

Pr.868 Setting	Terminal function	Calibration parameter	
		Bias setting	Gain setting
0 (initial value)	Frequency (speed) setting auxiliary	**C2 (Pr.902) Terminal 2 frequency setting bias frequency** **C3 (Pr.902) Terminal 2 frequency setting bias** **C5 (Pr.904) Terminal 4 frequency setting bias frequency** **C6 (Pr.904) Terminal 4 frequency setting bias**	**Pr.125 Terminal 2 frequency setting gain frequency** **C4 (Pr.903) Terminal 2 frequency setting gain** **Pr.126 Terminal 4 frequency setting gain frequency** **C7 (Pr.905) Terminal 4 frequency setting gain**
4	Stall prevention operation level*1 /torque limit	**C16 (Pr.919) Terminal 1 bias command (torque)** **C17 (Pr.919) Terminal 1 bias (torque)**	**C18 (Pr.920) Terminal 1 gain command (torque)** **C19 (Pr.920) Terminal 1 gain (torque)**
9999	No function	—	—

• Calibration parameter according to the terminal 4 function

Pr.858 setting	Terminal function	Calibration parameter	
		Bias setting	Gain setting
0 (initial value)	Frequency command	**C5 (Pr.904) Terminal 4 frequency setting bias frequency** **C6 (Pr.904) Terminal 4 frequency setting bias**	**Pr.126 Terminal 4 frequency setting gain frequency** **C7 (Pr.905) Terminal 4 frequency setting gain**
4	Stall prevention operation level *1 /torque limit	**C38 (Pr.932) Terminal 4 bias command (torque)** **C39 (Pr.932) Terminal 4 bias (torque)**	**C40 (Pr.933) Terminal 4 gain command (torque)** **C41 (Pr.933) Terminal 4 gain (torque)**
9999	No function	—	—

*1 Use **Pr.148 Stall prevention level at 0 V input** and **Pr.149 Stall prevention level at 10 V input** to adjust the bias and gain for stall prevention operation level under V/F control and Advanced magnetic flux vector control.

◆To change the frequency for the maximum analog input (Pr.125, Pr.126)

• To change only the frequency setting (gain) for the maximum analog input voltage (current), set **Pr.125 (Pr.126)**. (**C2 (Pr.902) to C7 (Pr.905)** settings do not need to be changed.)

◆Analog input bias/gain calibration (C2 (Pr.902) to C7 (Pr.905), C12 (Pr.917) to C15 (Pr.918))

- The "bias" and "gain" functions serve to adjust the relationship between a setting input signal and the output frequency. A setting input signal is such as 0 to 5 VDC/0 to 10 V or 4 to 20 mADC externally input to set the output frequency.
- Set the terminal 2 input bias frequency by using **C2 (Pr.902)**. (It is initially set to the frequency at 0 V.)
- Set the output frequency to the frequency command voltage (current) set by the **Pr.73 Analog input selection** by using **Pr.125**.
- Set the bias frequency of the terminal 1 input using **C12 (Pr.917)**. (It is initially set to the frequency at 0 V.)
- Set the gain frequency of the terminal 1 input using **C14 (Pr.918)**. (It is initially set to the frequency at 10 V.)
- Set the bias frequency of the terminal 4 input using **C5 (Pr.904)**. (It is initially set to the frequency at 4 mA.)
- Set the output frequency for 20 mA of the frequency command current (4 to 20 mA) by using **Pr.126**.

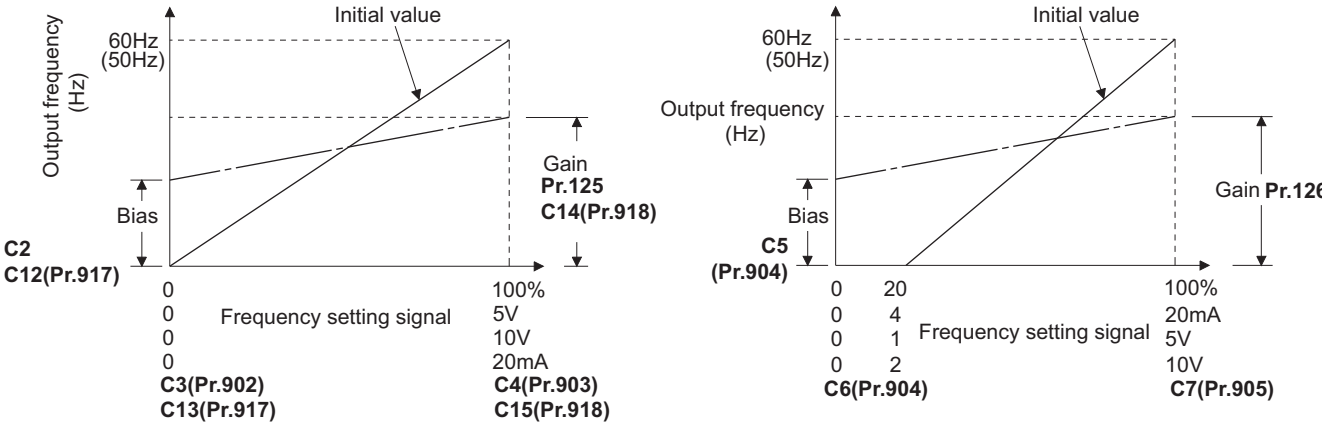

- There are three methods to adjust the frequency setting voltage (current) bias/gain.
  - Adjust any point with application of a voltage (current) between terminals 2 and 5 (4 and 5).☞page 317
  - Adjust any point without application of a voltage (current) between terminals 2 and 5 (4 and 5).☞page 318
  - Adjust frequency only without adjustment of voltage (current).☞page 319

NOTE

- Performing terminal 2 calibration that includes a change of the setting frequency incline changes terminal 1 setting.
- Calibration with voltage input to terminal 1 sets (terminal 2 (4) analog value + terminal 1 analog value) as the analog calibration value.
- Always calibrate the input after changing the voltage/current input signal with **Pr.73, Pr.267**, and the voltage/current input selection switch.

◆Analog input display unit changing (Pr.241)

- The analog input display unit (%/V/mA) for analog input bias and gain calibration can be changed.
- Depending on the terminal input specification set to **Pr.73, Pr.267**, and voltage/current input switches, the display unit of **C3 (Pr.902), C4 (Pr.903), C6 (Pr.904), and C7 (Pr.905)** change as described below:

Analog command (terminals 2, 4) (depending on Pr.73, Pr.267, and voltage/current input switch)	Pr.241 = 0 (initial value)	Pr.241 = 1
0 to 5 V input	0 to 5 V → 0 to 100% (0.1%)	0 to 100% → 0 to 5 V (0.01 V)
0 to 10 V input	0 to 10 V → 0 to 100% (0.1%)	0 to 100% → 0 to 5 V (0.01 V) display
0 to 20 mA input	0 to 20 mA → 0 to 100% (0.1%)	0 to 100% → 0 to 20 mA (0.01 mA)

NOTE

- When the terminal 1 input specification (0 to ±5 V, 0 to ±10 V) does not agree with the main speed (terminal 2, terminal 4 input) specification (0 to 5 V, 0 to 10 V, 0 to 20 mA), and if the voltages are applied to terminal 1, the analog input is not correctly displayed. (For example, in the initial status, when 0 V is applied to terminal 2 and 10 V is applied to terminal 1, and the analog value is displayed as 5 V (100%).)
  Use the inverter with the **Pr.241** = "0 (initial value)" setting. (0% display).

◆Frequency setting voltage (current) bias/gain adjustment method

(a) Adjust any point with application of a voltage (current) between terminals 2 and 5 (4 and 5). (Frequency setting gain adjustment example)

	Operation
1.	Screen at power-ON The monitor display appears.
2.	Changing the operation mode Press PU/EXT to choose the PU operation mode. [PU] indicator is on. Calibration is also possible in the External operation mode.
3.	Parameter setting mode Press MODE to choose the parameter setting mode. (The parameter number read previously appears.)
4.	Calibration parameter selection Turn until C. . . . appears. Press SET to display C -- -- -- -- .
5.	Selecting the parameter number Turn to choose C 4 **C4(Pr.903) Terminal 2 frequency setting gain** for the terminal 1. and C 7 **C7(Pr.905) Terminal 4 frequency setting gain** for the terminal 4.
6.	Analog voltage (current) display Press SET to display the analog voltage (current) % currently applied to the terminal 1 (4). Do not touch until calibration is completed.
7.	Voltage (current) application Apply a 5 V (20 mA) . (Turn the external potentiometer connected across terminals 1 and 5 (terminals 4 and 5) to a desired position.)
8.	Setting completed Press SET to enter the setting. The analog voltage (current) % and C 4 (C 7) flicker alternately. • Press to read another parameter. • Press SET to return to the C -- -- -- -- display. • Press SET twice to show the next parameter.

(b) Adjust any point without application of a voltage (current) between terminals 2 and 5 (4 and 5). (Frequency setting gain adjustment example)

	Operation
1.	Screen at power-ON The monitor display appears.
2.	Changing the operation mode Press PU/EXT to choose the PU operation mode. [PU] indicator is on. Calibration is also possible in the External operation mode.
3.	Parameter setting mode Press MODE to choose the parameter setting mode. (The parameter number read previously appears.)
4.	Calibration parameter selection Turn dial until C. . . . appears. Press SET to display C -- -- -- -- .
5.	Selecting the parameter number Turn dial to choose C 4 **C4(Pr.903) Terminal 2 frequency setting gain** for the terminal 1. and C 7 **C7(Pr.905) Terminal 4 frequency setting gain** for the terminal 4.
6.	Analog voltage (current) display Press SET to display the analog voltage (current) % currently applied to the terminal 1 (4).
7.	Analog voltage (current) adjustment When dial is turned, the gain voltage (current) % currently set to the parameter is displayed. When dial until the desired gain voltage (current) % is displayed.
8.	Setting completed Press SET to enter the setting. The analog voltage (current) % and C 4 (C 7) flicker alternately. • Turn dial to read another parameter. • Press SET to return to the C -- -- -- -- display. • Press SET twice to show the next parameter.

NOTE

- By pressing dial after step 6, the present frequency setting bias/gain setting can be confirmed. Confirmation is not possible after executing step 7.

(c) Adjust only frequency without adjustment of gain voltage (current)
(When changing the gain frequency from 60 Hz to 50 Hz)

Operation

1. Parameter selection

Turn to choose P. 125 **(Pr.125)** for the terminal 2, and P. 126 **(Pr.126)** for the terminal 4.

Press SET to show the present set value. (150.00%)

2. Torque setting change

Turn to change the set value to "50.00". (130.00%)

Press SET to enter the setting. "50.00" and "P. 125 (P. 126)" flicker alternately.

3. Checking the mode/monitor

Press MODE three times to change to the monitor / frequency monitor.

4. Start

Turn ON the start switch (STF or STR) to apply a voltage across terminals 1 and 5 (4 and 5),
Operation is performed with 130% torque.

NOTE

- If the frequency meter (display meter) connected across the terminals FM and SD (CA and 5) does not indicate exactly 60 Hz, set the **calibration parameter C0 FM/CA terminal calibration**. (Refer to page 279.)
- If the gain and bias of voltage (current) setting voltage are too close, an error (Er3) may be displayed at setting.
- Changing **C4 (Pr.903) or C7 (Pr.905) (gain adjustment)** will not change **Pr.20**.
  Input to the terminal 1 (frequency setting auxiliary input) is added to the frequency setting signal.
- For operation outline of the parameter unit (FR-PU07), refer to the Instruction Manual of the FR-PU07.
- To set the value to 120 Hz or higher, the **Pr.18 High speed maximum frequency** needs to be 120 Hz or higher. (Refer to page 245.)
- Make the bias frequency setting using the **calibration parameter C2 (Pr.902) and C5 (Pr.904)**. (Refer to page 316.)

⚠ Caution

- **Be cautious when setting any value other than "0" as the bias frequency at 0 V (0 mA). Even if a speed command is not given, simply turning ON the start signal will start the motor at the preset frequency.**

Parameters referred to

Pr.1 Maximum frequency, Pr.18 High speed maximum frequency page 245
Pr.20 Acceleration/deceleration reference frequency page 187
Pr.73 Analog input selection, Pr.267 Terminal 4 input selection page 306
Pr.79 Operation mode selection page 200
Pr.858 Terminal 4 function assignment, Pr.868 Terminal 1 function assignment page 310

5.9.6 Bias and gain for voltage (current) setting of stall prevention operation level PM

The magnitude (slope) of the stall prevention operation level can be set as desired in relation to the analog signal (0 to 5 VDC, 0 to 10 VDC, or 4 to 20 mA).
Use **Pr.73 Analog input selection** or **Pr.267 Terminal 4 input selection** to switch among input 0 to 5 VDC, 0 to 10 V, and 4 to 20 mA. (Refer to page 306.)

Pr.	Name	Initial value	Setting range	Description	
C16 (919)*1 T110	**Terminal 1 bias command (torque)**	0%	0 to 400%	Set the stall prevention operation level of the bias side of terminal 1 input.	
C17 (919)*1 T111	**Terminal 1 bias (torque)**	0%	0 to 300%	Set the converted % on bias side voltage of terminal 1 input.	
C18 (920)*1 T112	**Terminal 1 gain command (torque)**	150%	0 to 400%	Set the stall prevention operation level of the gain (maximum) of terminal 1 input..	
C19 (920)*1 T113	**Terminal 1 gain (torque)**	100%	0 to 300%	Set the converted % on the gain side voltage of terminal 1 input.	
C38 (932)*1 T410	**Terminal 4 bias command (torque)**	0%	0 to 400%	Set the stall prevention operation level of the bias side of terminal 4 input.	
C39 (932)*1 T411	**Terminal 4 bias (torque)**	20%	0 to 300%	Set the converted % on bias side current (voltage) of terminal 4 input.	
C40 (933)*1 T412	**Terminal 4 gain command (torque)**	150%	0 to 400%	Set the stall prevention operation level of the gain (maximum) of terminal 4 input.	
C41 (933)*1 T413	**Terminal 4 gain (torque)**	100%	0 to 300%	Set the converted % on gain side current (voltage) of terminal 4 input.	
241 M043	**Analog input display unit switchover**	0	0	% display	Select the unit for analog input display.
			1	V/mA display	

*1 The parameter number in parentheses is the one for use with the LCD operation panel and the parameter unit.

◆Changing the function of analog input terminal

- The initial value for terminal 1 used as analog input is set to speed setting auxiliary (speed limit auxiliary), and terminal 4 is set to speed command. To use the analog input terminal to input the stall prevention operation level, set **Pr.868 Terminal 1 function assignment** and **Pr.858 Terminal 4 function assignment** to change the function. (Refer to page 310.)

◆Relationship between the analog input terminal function and the calibration parameter

• Calibration parameter according to the terminal 1 function

Pr.868 setting	Terminal function	Calibration parameter	
		Bias setting	Gain setting
0 (initial value)	Frequency (speed) setting auxiliary	**C2 (Pr.902) Terminal 2 frequency setting bias frequency** **C3 (Pr.902) Terminal 2 frequency setting bias** **C5 (Pr.904) Terminal 4 frequency setting bias frequency** **C6 (Pr.904) Terminal 4 frequency setting bias**	**Pr.125 Terminal 2 frequency setting gain frequency** **C4 (Pr.903) Terminal 2 frequency setting gain** **Pr.126 Terminal 4 frequency setting gain frequency** **C7 (Pr.905) Terminal 4 frequency setting gain**
4	Stall prevention operation level *1	**C16 (Pr.919) Terminal 1 bias command (torque)** **C17 (Pr.919) Terminal 1 bias (torque)**	**C18 (Pr.920) Terminal 1 gain command (torque)** **C19 (Pr.920) Terminal 1 gain (torque)**
9999	No function	—	—

*1 Use **Pr.148 Stall prevention level at 0 V input** and **Pr.149 Stall prevention level at 10 V input** to adjust the bias and gain for stall prevention operation level under V/F control and Advanced magnetic flux vector control.

• Calibration parameter according to the terminal 4 function

Pr.858 setting	Terminal function	Calibration parameter	
		Bias setting	Gain setting
0 (initial value)	Frequency (speed) command	**C5 (Pr.904) Terminal 4 frequency setting bias frequency** **C6 (Pr.904) Terminal 4 frequency setting bias**	**Pr.126 Terminal 4 frequency setting gain frequency** **C7 (Pr.905) Terminal 4 frequency setting gain**
4	Stall prevention operation level *2	**C38 (Pr.932) Terminal 4 bias command (torque)** **C39 (Pr.932) Terminal 4 bias (torque)**	**C40 (Pr.933) Terminal 4 gain command (torque)** **C41 (Pr.933) Terminal 4 gain (torque)**
9999	No function	—	—

*2 Use **Pr.148 Stall prevention level at 0 V input** and **Pr.149 Stall prevention level at 10 V input** to adjust the bias and gain for stall prevention operation level under V/F control and Advanced magnetic flux vector control.

◆Change the stall prevention operation level at maximum analog input. (C18 (Pr.920), C40 (Pr.933))

• To only change the stall prevention operation level setting (gain) of the maximum analog input voltage (current), set to **C18 (Pr.920), C40 (Pr.933)**.

◆Calibration of analog input bias and gain (C16 (Pr.919) to C19 (Pr.920), C38 (Pr.932) to C41 (Pr.933))

- "Bias"/"gain" function can adjust the relation between the stall prevention operation level and the setting input signal. Examples of setting input signals are 0 to 5 VDC, 0 to 10 VDC, or 4 to 2 mADC, and they are externally input.
- Set the bias value of the terminal 1 input using **C16 (Pr.919)**. (Shipped from factory with the stall prevention operation level for 0 V)
- Set the stall prevention operation level against the input voltage set by **Pr.73 Analog input selection** with **C18 (Pr.920)**. (Initial value is 10 V.)
- Set the bias value of the terminal 4 input using **C38 (Pr.932)**. (The initial value is the stall prevention operation level for 4 mA.)
- Set the stall prevention operation level against the 20 mA for input current (4 to 20 mA) with **C40 (Pr.933)**.

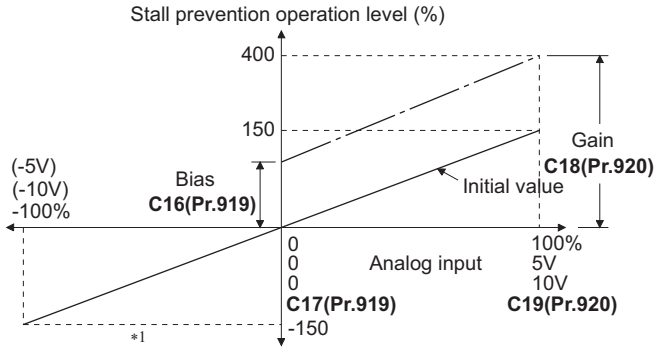

Calibration example of terminal 1

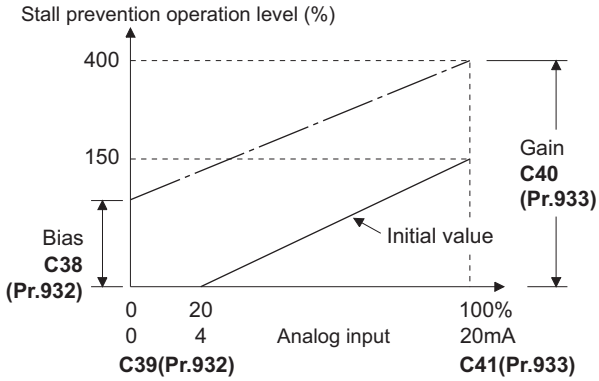

Calibration example of terminal 4

*1 If a negative command is given, the stall prevention operation level is regarded as "0".

- There are three methods to adjust the torque setting voltage (current) bias and gain.
  - Method to adjust arbitrary point with application of a voltage (current) between terminals 1 and 5 (4 and 5). ☞page 323
  - Method to adjust arbitrary point without application of a voltage (current) between terminals 1 and 5 (4 and 5). ☞page 324
  - Method to adjust only stall prevention operation level without adjusting voltage (current). ☞page 325

NOTE

- Always calibrate the input after changing the voltage/input signal with **Pr.73, Pr.267**, and the voltage/current input selection switch.

◆Analog input display unit changing (Pr.241)

- The analog input display unit (%/V/mA) for analog input bias and gain calibration can be changed.
- Depending on the terminal input specification set to **Pr.73 and Pr.267**, the display units of **C17 (Pr.919), C19 (Pr.920), C39 (Pr.932), and C41 (Pr.933)** will change as shown below.

Analog command (terminals 1 and 4) (Depends on Pr.73, Pr.267)	Pr.241 = 0 (initial value)	Pr.241 = 1
0 to 5 V input	0 to 5 V → 0 to 100% (0.1%) display	0 to 100% → 0 to 5 V (0.01 V) display
0 to 10 V input	0 to 10 V → 0 to 100% (0.1%) display	0 to 100% → 0 to 10 V (0.01 V) display
0 to 20 mA input	0 to 20 mA → 0 to 100% (0.1%) display	0 to 100% → 0 to 20 mA (0.01 mA)

◆Adjust method for the stall prevention operation level setting voltage (current) bias and gain

(a) Adjust any point with application of a voltage (current) between terminals 1 and 5 (4 and 5).

	Operation
1.	Screen at power-ON The monitor display appears.
2.	Changing the operation mode Press PU/EXT to choose the PU operation mode. [PU] indicator is on. Calibration is also possible in the External operation mode.
3.	Parameter setting mode Press MODE to choose the parameter setting mode. (The parameter number read previously appears.)
4.	Calibration parameter selection Turn dial until C. . . . appears. Press SET to display C -- -- -- -- .
5.	Selecting the parameter number Turn dial to choose C 19 (**C19(Pr.920) Terminal 1 gain (torque)**) for the terminal 1, and C 41 (**C41(Pr.933) Terminal 4 gain (torque)**) for the terminal 4.
6.	Analog voltage (current) display Press SET to display the analog voltage (current) % currently applied to the terminal 1 (4). Do not touch dial until calibration is completed.
7.	Voltage (current) application Apply a 5 V (20 mA). (Turn the external potentiometer connected across terminals 1 and 5 (terminals 4 and 5) to a desired position.)
8.	Setting completed Press SET to enter the setting. The analog voltage (current) % and C 19 (C 41) flicker alternately. • Turn dial to read another parameter. • Press SET to return to the C -- -- -- -- display. • Press SET twice to show the next parameter.

(b) Adjust any point without application of a voltage (current) between terminals 1 and 5 (4 and 5).

	Operation
1.	Screen at power-ON The monitor display appears.
2.	Changing the operation mode Press [PU/EXT] to choose the PU operation mode. [PU] indicator is on. Calibration is also possible in the External operation mode.
3.	Parameter setting mode Press [MODE] to choose the parameter setting mode. (The parameter number read previously appears.)
4.	Calibration parameter selection Turn until C. . . . appears. Press [SET] to display C -- -- -- -- .
5.	Selecting the parameter number Turn to choose C 19 **C19(Pr.920) Terminal 1 gain (torque)** for the terminal 1, and C 41 **C41(Pr.933) Terminal 4 gain (torque)** for the terminal 4.
6.	Analog voltage (current) display Press [SET] to display the analog voltage (current) % currently applied to the terminal 1 (4).
7.	Analog voltage (current) adjustment When is turned, the gain voltage (current) % currently set to the parameter is displayed. Turn until the desired gain voltage (current) % is displayed.
8.	Setting completed Press [SET] to enter the setting. The analog voltage (current) % and C 19 (C 41) flicker alternately. • Turn to read another parameter. • Press [SET] to return to the C -- -- -- -- display. • Press [SET] twice to show the next parameter.

NOTE

• By pressing after step 6, the bias/gain setting at the present stall prevention operation level can be confirmed. Confirmation is not possible after executing step 7.

(c) Method to adjust only stall prevention operation level without adjusting gain voltage (current).
(When changing the gain value from 150% to 130%.)

Operation

1. Parameter selection

Turn to choose C 18 **(Pr.920)** for the terminal 2, and C 40 **(Pr.933)** for the terminal 4.

Press SET to show the present set value. (150.00%)

2. Changing the stall prevention operation level

Turn to change the set value to "130.00". (130.00%)

Press SET to enter the setting. "130.00" and "C 18 (C 40)" flicker alternately.

3. Checking the mode/monitor

Press MODE three times to change to the monitor / frequency monitor.

4. Start

Turn ON the start switch (STF or STR) to apply a voltage across terminals 1 and 5 (4 and 5),
Operation is performed with 130% stall prevention operation level.

NOTE

- If the gain and bias of the stall prevention operation level are too close, an error (Er3) may displayed at setting.
- For operation outline of the parameter unit (FR-PU07), refer to the Instruction Manual of the FR-PU07.
- Set the bias setting using the **calibration parameter C16 (Pr.919)** or **C38 (Pr.932)**. (Refer to page 322.)

Parameters referred to

Pr.73 Analog input selection, Pr.267 Terminal 4 input selection page 306
Pr.79 Operation mode selection page 200
Pr.858 Terminal 4 function assignment, Pr.868 Terminal 1 function assignment page 310

5.9.7 Checking of current input on analog input terminal

When current is input to the analog input terminal 2 and terminal 4, operation when the current input has gone below the specified level (loss of analog current input) can be selected. It is possible to continue the operation even when the analog current input is lost.

Pr.	Name	Initial value	Setting range	Description
573 T052	**4 mA input check selection**	9999	1	Continues the operation with output frequency before the current input loss.
			2	4 mA input fault is activated when the current input loss is detected.
			3	Decelerates to stop when the current input loss is detected. After it is stopped, 4 mA input fault (E.LCI) is activated.
			4	Continues operation with the **Pr.777** setting.
			9999	No current input check
777 T053	**4 mA input fault operation frequency**	9999	0 to 590 Hz	Set the running frequency for current input loss. (Valid when **Pr.573** = "4")
			9999	No current input check when **Pr.573** = "4"
778 T054	**4 mA input check filter**	0 s	0 to 10 s	Set the current input loss detection time.

◆Analog current input loss condition (Pr.778)

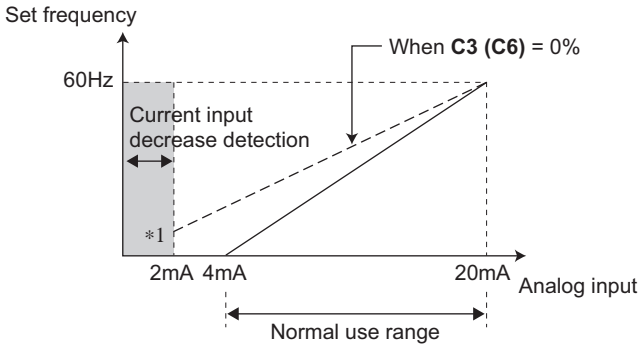

*1 When the **Pr.573** ≠ "9999" and terminal 4 (terminal 2) is calibrated to 2 mA or less with **C2 (Pr.902) (C5 (Pr.904))**, analog input frequency that is 2 mA or less will become input current loss, thus it will not be as the bias setting frequency.

- When the condition of current input to the terminal 4 (terminal 2) continues to be 2 mA or less for **Pr.778** setting time, it is considered as loss of analog current input and alarm (LF) signal is turned ON. The LF signal will turn OFF when the current input becomes 3 mA or higher.
- For the LF signal, set "98 (positive logic) or 198 (negative logic)" in any of **Pr.190 to Pr.196 (output terminal function selection)** to assigns the function.

NOTE

- Changing the terminal assignment using **Pr.190 to Pr.196 (output terminal function selection)** may affect the other functions. Set parameters after confirming the function of each terminal.

◆Continue operation at analog current input loss (Pr.573 = "1, 4", Pr.777)

- When **Pr.573** = "1", operation is continued with the output frequency before the current input loss.
- When **Pr.573** = "4" and **Pr.777** ≠ "9999", operation is continued with frequency set in **Pr.777**.
- When the start command is turned OFF during the input current loss, deceleration stop is immediately performed, and the operation is not restored even if start command is input again.
- When the current input is restored, the LF signal is turned OFF, and operation is performed according to the current input.
- External operation

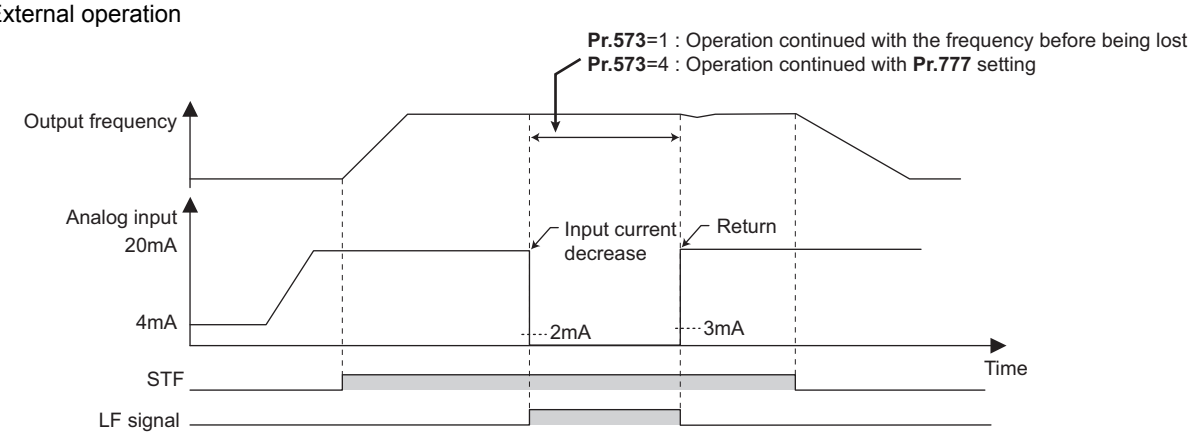

- PID control (reverse action)

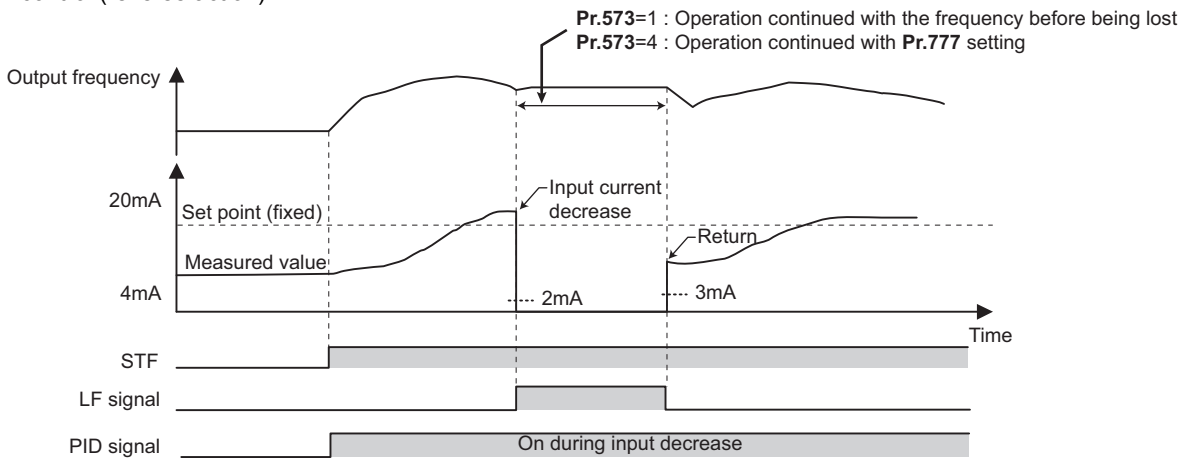

NOTE

- When the setting is changed to continuously operate after the input current loss (**Pr.573** = "1, 4"), the motor will operate as the frequency before loss is 0 Hz.

◆Fault output (Pr.573 = "2")

- When the analog current input becomes 2 mA or lower, 4 mA input fault (E.LCI) will be activated and the output is shut off.
- PID control (reverse action)

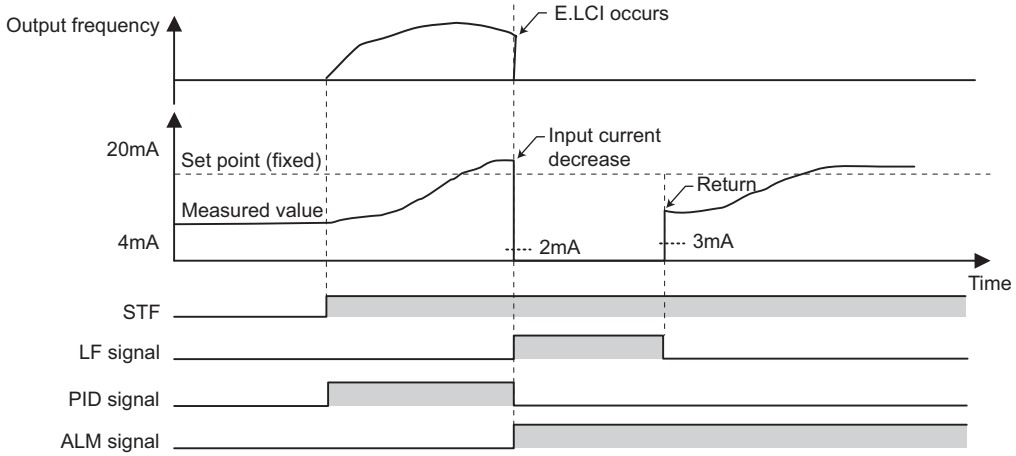

◆Fault output after deceleration to stop (Pr.573 = "3")

- When the analog current input becomes 2 mA or lower, 4 mA input fault (E.LCI) will be activated after the deceleration stop and the output is shut off.
- When the analog current input is restored during the deceleration, it will accelerate again and operate according to the current input.
- PID control (reverse action)

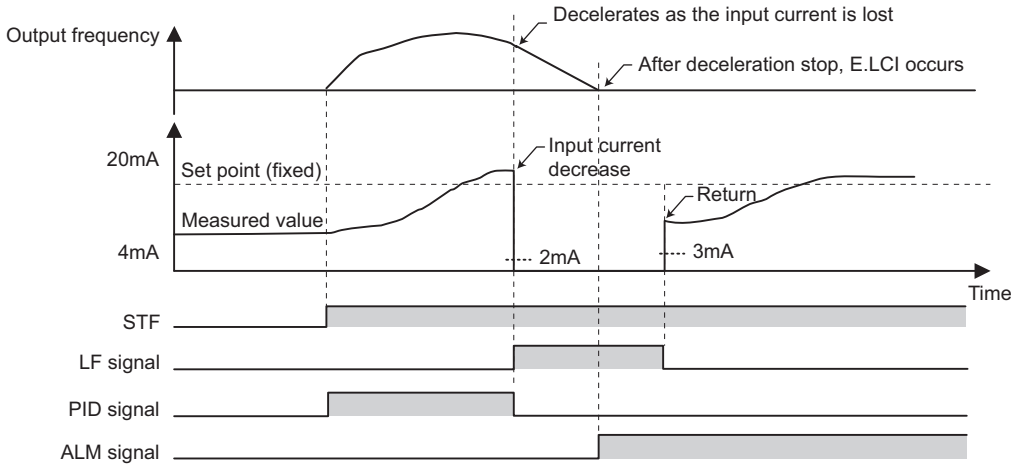

- The analog input current is restored during deceleration under PID control (reverse action)

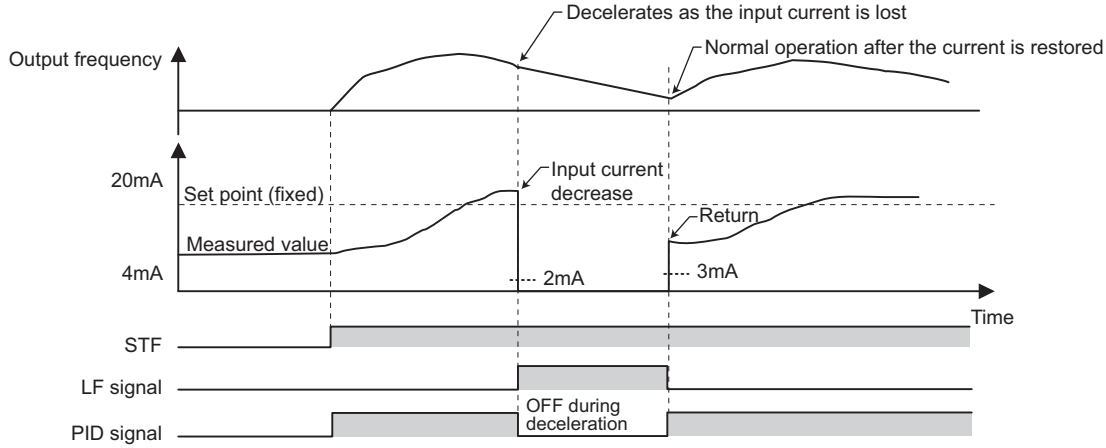

◆Function related to current input check

Function	Operation	Refer to page
Minimum frequency	When the operation continues, setting of the minimum frequency against the running frequency is valid even during the current input loss.	245
Multi-speed operation	The multi-speed setting signal is prioritized even during current input loss (operate according to multi-speed setting even during operation in continuous frequency or during deceleration stop). When the multi-speed setting signal is turned OFF due to input current loss condition during the multi-speed operation, it will perform deceleration stop even if it is set to continue operation for current input loss.	222
JOG operation	JOG operation is prioritized even during current input loss (switch to JOB operation even during operation with continuous frequency or during deceleration stop). When the JOG signal is turned OFF due to input current loss condition during the JOG operation, it will perform deceleration stop even if it is set to continue operation for current input loss.	221
MRS signal	MRS signal is enabled even during current input loss (output is shut off with MRS signal ON even during operation with continuous frequency or during deceleration stop).	332
Remote setting	During operation with remote setting and transferred to operation continuation due to input current loss, acceleration, deceleration, and clear by the remote setting is invalid. They will become valid after restoring the current input loss.	194
Retry function	When the protective function has operated during the operation continuation due to current input loss, and retry was a success, operation will continue without clearing the operation continuation frequency.	236
Added compensation, override compensation	During operation with added compensation or override compensation and transferred to operation continuation due to input current loss, added compensation and override compensation will become invalid. They will become valid after restoring the current input loss.	311
Input filter time constant	Current input loss is detected with the value before the filter. Operation continuation before the input loss will use the value after the filter.	325
PID control	PID calculation is stopped during the current input loss. However, PID control will not be disabled (normal operation). During the pre-charge, end determination or fault determination by the pre-charge function will not be performed when the current input loss occurs. Sleep function is prioritized even during current input loss. When the clearing condition of the sleep function is met during the current input loss, operation is restored with continuation frequency.	378
Power failure stop	The power failure stop function is prioritized even if power failure current input loss is detected. Set frequency after the power failure stop and re-acceleration is the operation continuation frequency at the current input loss. When the E.LCI generation at the time of current input loss is selected, E.LCI will be generated after the power failure stop.	426
Traverse function	Traverse operation is performed based on frequency even during the operation continuation during current input loss.	373

Parameters referred to

Pr.73 Analog input selection, Pr.267 Terminal 4 input selection ☞ page 306

5.9.8 Input terminal function selection

Use the following parameters to select or change the input terminal functions.

Pr.	Name	Initial value	Initial signal	Setting range
178 T700	**STF terminal function selection**	60	STF (Forward rotation command)	0 to 8, 10 to 14, 16, 18, 24, 25, 28, 37 to 40, 46 to 48, 50, 51, 60, 62, 64 to 67, 70 to 73, 77 to 81, 84, 94 to 98, 9999
179 T7001	**STR terminal function selection**	61	STR (Reverse rotation command)	0 to 8, 10 to 14, 16, 18, 24, 25, 28, 37 to 40, 46 to 48, 50, 51, 61, 62, 64 to 67, 70 to 73, 77 to 81, 84, 94 to 98, 9999
180 T702	**RL terminal function selection**	0	RL (Low-speed operation command)	0 to 8, 10 to 14, 16, 18, 24, 25, 28, 37 to 40, 46 to 48, 50, 51, 62, 64 to 67, 70 to 73, 77 to 81, 84, 94 to 98, 9999
181 T703	**RM terminal function selection**	1	RM (Middle-speed operation command)	
182 T704	**RH terminal function selection**	2	RH (High-speed operation command)	
183 T705	**RT terminal function selection**	3	RT (Second function selection)	
184 T706	**AU terminal function selection**	4	AU (Terminal 4 input selection)	
185 T707	**JOG terminal function selection**	5	JOG (Jog operation selection)	
186 T708	**CS terminal function selection**	9999	No function	
187 T709	**MRS terminal function selection**	24*1	MRS (Output stop)	
		10*2	X10 (Inverter run enable signal)	
188 T710	**STOP terminal function selection**	25	STP (STOP) (Start self-holding selection)	
189 T711	**RES terminal function selection**	62	RES (Inverter reset)	

Pr.	Name	Initial value	Setting range	Description
699 T740	**Input terminal filter**	9999	5 to 50 ms	Set the time to delay the input terminal response.
			9999	No input terminal filter

*1 The initial value is for standard models.

*2 The initial value is for separated converter types.

◆Input terminal function assignment

- Using **Pr.178 to Pr.189**, set the functions of the input terminals
- Refer to the following table and set the parameters.

Setting	Signal name	Function		Related parameter	Refer to page
0	RL	**Pr.59** = 0 (initial value)	Low-speed operation command	**Pr.4 to Pr.6, Pr.24 to Pr.27, Pr.232 to Pr.239**	222
		Pr.59 ≠ 0 *1	Remote setting (setting clear)	**Pr.59**	194
1	RM	**Pr.59** = 0 (initial value)	Middle-speed operation command	**Pr.4 to Pr.6, Pr.24 to Pr.27, Pr.232 to Pr.239**	222
		Pr.59 ≠ 0 *1	Remote setting (deceleration)	**Pr.59**	194
2	RH	**Pr.59** = 0 (initial value)	High-speed operation command	**Pr.4 to Pr.6, Pr.24 to Pr.27, Pr.232 to Pr.239**	222
		Pr.59 ≠ 0 *1	Remote setting (acceleration)	**Pr.59**	194
3	RT	Second function selection		**Pr.44 to Pr.51, Pr.450 to Pr.463, Pr.569, Pr.832, etc.**	333
4	AU	Terminal 4 input selection		**Pr.267**	306
5	JOG	Jog operation selection		**Pr.15, Pr.16**	221

(T) Multi-Function Input Terminal Parameters

Setting	Signal name	Function	Related parameter	Refer to page
6	CS	Selection of automatic restart after instantaneous power failure, flying start	**Pr.57, Pr.58, Pr.162 to Pr.165, Pr.299, Pr.611**	414, 420
		Electronic bypass function	**Pr.57, Pr.58, Pr.135 to Pr.139, Pr.159**	363
7	OH	External thermal relay input *2	**Pr.9**	225
8	REX	15-speed selection (Combination with multi-speeds of RL, RM, and RH)	**Pr.4 to Pr.6, Pr.24 to Pr.27, Pr.232 to Pr.239**	222
10	X10	Inverter run enable signal (FR-HC2/FR-CV/FR-CC2 connection)	**Pr.30, Pr.599**	508
11	X11	FR-HC2/FR-CC2 connection, instantaneous power failure detection	**Pr.30**	508
12	X12	PU operation external interlock	**Pr.79**	200
13	X13	External DC injection brake operation start	**Pr.10 to Pr.12**	502
14	X14	PID control valid terminal	**Pr.127 to Pr.134, Pr.575 to Pr.577**	378
16	X16	PU/External operation switchover (External operation with X16-ON)	**Pr.79, Pr.340**	200
18	X18	V/F switchover (V/F control with X18-ON)	**Pr.80, Pr.81, Pr.800**	143
24	MRS	Output stop	**Pr.17**	332
		Electronic bypass function	**Pr.57, Pr.58, Pr.135 to Pr.139, Pr.159**	363
25	STP (STOP)	Start self-holding selection	**Pr.250**	335
28	X28	Start-time tuning start external input	**Pr.95**	359
37	X37	Traverse function selection	**Pr.592 to Pr.597**	373
38	PDI1	PID multistage set point setting 1	**Pr.1460 to Pr.1466**	378
39	PDI2	PID multistage set point setting 2		
40	PDI3	PID multistage set point setting 3		
46	TRG	Trace trigger input	**Pr.1020 to Pr.1047**	433
47	TRC	Trace sampling start/end	**Pr.1020 to Pr.1047**	433
48	X48	Power failure stop external	**Pr.261 to Pr.266, Pr.294, Pr.668**	426
50	SQ	Sequence start	**Pr.414**	431
51	X51	Fault clear	**Pr.414**	431
60	STF	Forward rotation command (Assignable to the STF terminal **(Pr.178)** only)	**Pr.250**	335
61	STR	Reverse rotation command (Assignable to the STR terminal **(Pr.179)** only)	**Pr.250**	335
62	RES	Inverter reset	**Pr.75**	162
64	X64	PID forward/reverse action switchover	**Pr.127 to Pr.134**	378
65	X65	PU/NET operation switchover (PU operation with X65-ON)	**Pr.79, Pr.340**	200
66	X66	External/NET operation switchover (NET operation with X66-ON)	**Pr.79, Pr.340**	200
67	X67	Command source switchover (Command by **Pr.338, Pr.339** enabled with X67-ON)	**Pr.338, Pr.339**	210
70	X70	DC feeding operation permission *4	**Pr.30**	508
71	X71	DC feeding cancel *4	**Pr.30**	508
72	X72	PID integral value reset	**Pr.127 to Pr.134, Pr.575 to Pr.577**	378
73	X73	Second PID P control switchover	**Pr.127 to Pr.134, Pr.575 to Pr.577**	378
77	X77	Pre-charge end command	**Pr.760 to Pr.764**	402
78	X78	Second pre-charge end command	**Pr.765 to Pr.769**	402
79	X79	Second PID forward/reverse action switchover	**Pr.753 to Pr.758**	378
80	X80	Second PID control valid terminal	**Pr.753 to Pr.758**	378
81	PGT	PID gain tuning start/forced end	**Pr.1211 to Pr.1219**	394
84	X84	Emergency drive execution command *4	**Pr.514, Pr.515, Pr.523, Pr.524, Pr.1013**	238
94	X94	Control signal input for main circuit power supply MC	**Pr.30, Pr.137, Pr.248, Pr.254**	370
95	X95	Converter unit fault input	**Pr.57, Pr.58, Pr.135 to Pr.139, Pr.159**	363
96	X96	Converter unit fault input (E.CPU, E.OUT)		
97	X97	Cleaning valid	**Pr.1469 to Pr.1479**	375
98	X98	Cleaning trigger		
9999	———	No function	———	———

*1 When **Pr.59 Remote function selection** ≠ "0", functions of the RL, RM, and RH signals will be changed as in the table.

*2 OH signal will operate with the relay contact "open".

*3 Available when the plug-in option is connected. For details, refer to the Instruction Manual of the option.

*4 The setting is available only for standard models.

NOTE

- Same function can be assigned to two or more terminals. In this case, the logic of terminal input is OR.
- Priority of the speed command is JOG > multi-speed setting (RH, RM, RL, REX) > PID (X14).
- When the (X10) signal is not set up, **Pr.79 Operation mode selection** = "7", and PU operation external interlock (X12) signal is Inverter run enable signal.
- Same signal is used to assign multi-speed (7 speed) and remote setting. Setting cannot be performed individually.
- When the terminal assignment is changed using **Pr.178 to Pr.189 (input terminal function selection)**, the terminal name will be different, which may result in an error of wiring, or affect other functions. Set parameters after confirming the function of each terminal.

◆Adjusting the response of input terminal (Pr.699)

- Response of the input terminal can be delayed in a range between 5 to 50 ms. (Example of STF signal operation)

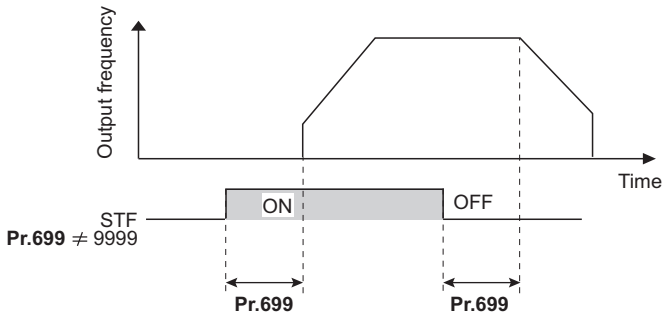

NOTE

- Setting of **Pr.699** is disabled (no filter) in the following cases.
  - Input terminal is already turned ON when the power is turned ON
  - Input signal used for the PLC function
  - Inverter run enable signal (X10) signal

5.9.9 Inverter output shutoff signal

The inverter output can be shut off with the MRS signal. The logic of the MRS signal can also be selected.

Pr.	Name	Initial value	Setting range	Description
17 T720	MRS input selection	0	0	Normally open input
			2	Normally closed input (NC contact input specification)
			4	External terminal: Normally closed input (NC contact input specification) Communication: Normally open input

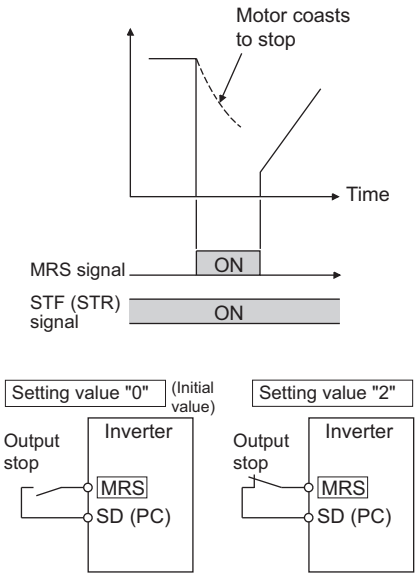

◆About output shutoff signal (MRS signal)

- When the Output stop (MRS) signal is turned ON while operating the inverter, the inverter output is instantaneously shut off.
- The response time of the MRS signal is within 2 ms.
- Terminal MRS may be used as described below.

(a) To use a mechanical brake (e.g. electromagnetic brake) to stop the motor
The inverter output is shut off when the mechanical brake operates.

(b) To provide interlock to disable operation by the inverter
With the MRS signal ON, the inverter cannot be operated even if the start signal is entered into the inverter.

(c) To coast the motor to a stop
When the start signal is turned OFF, the inverter decelerates the motor to a stop in the preset deceleration time, but when the MRS signal is turned ON, the motor coasts to a stop.

◆MRS signal logic inversion (Pr.17 = "2")

- When **Pr.17** = "2", the MRS signal can be changed to normally closed (NC contact) specification. The inverter will shut off the output with MRS signal turned ON (opened).

◆Assigning a different action for each MRS signal input via communication and external terminal (Pr.17 = "4")

- When **Pr.17** = "4", the MRS signal from an external terminal can be set as the normally closed (NC contact) input, and the MRS signal from communication as the normally open (NO contact) input. This function is useful to perform operation by communication with MRS signal from external terminal remained ON.

External MRS	Communication MRS	Pr.17 setting		
		0	2	4
OFF	OFF	Operation enabled	Output shutoff	Output shutoff
OFF	ON	Output shutoff	Output shutoff	Output shutoff
ON	OFF	Output shutoff	Output shutoff	Operation enabled
ON	ON	Output shutoff	Operation enabled	Output shutoff

NOTE

- The MRS signal is assigned to the terminal MRS in the initial status. By setting "24" in either **Pr.178 to Pr.189 (input terminal function selection)**, the RT signal can be assigned to the other terminal.
- When using an external terminal to input the MRS signal, the MRS signal shuts off the output in any of the operation modes.
- MRS signal is valid from either of communication or external, but when the MRS signals is to be used as Inverter run enable signal (X10), it is required to input from external.
- When the terminal assignment is changed using **Pr.178 to Pr.189 (input terminal function selection)**, the terminal name will be different, which may result in an error of wiring, or affect other functions. Set parameters after confirming the function of each terminal.

Parameters referred to
Pr.178 to Pr.189 (input terminal function selection) ☞ page 329

5.9.10 Selecting operation condition of the second function selection signal (RT)

Second (third) function can be selected by the RT (X9) signal.
Operating condition (validity condition) for second (third) function can be also set.

Pr.	Name	Initial value	Setting range	Description
155 **T730**	**RT signal function validity condition selection**	0	0	Second function is immediately enabled with ON of RT signal.
			10	Second function will be enabled while RT signal is ON and running in constant speed. (Disabled while accelerating or decelerating)

- Turning ON the Second function selection (RT) signal enables the second functions.
- The following table lists application examples of the second functions.
  - Switching between regular use and emergency use
  - Switching between heavy load and light load
  - Change the acceleration/deceleration time by break point acceleration/deceleration
  - Switching characteristics of main motor and sub motor

Connection diagram for second function selection

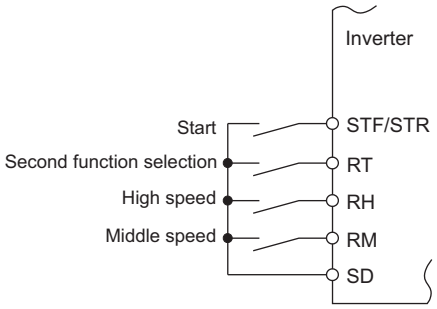

Example of second acceleration/deceleration time

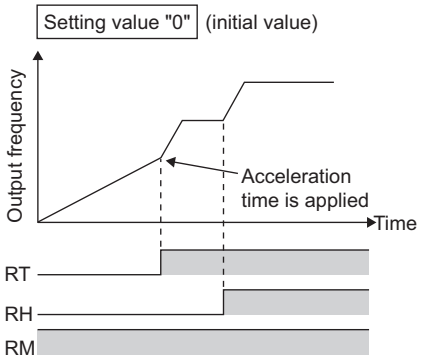

(T) Multi-Function Input Terminal Parameters

- When the RT signal is ON, the following second functions are selected at the same time.

Function	First function Parameter number	Second function Parameter number	Refer to page
Torque boost	**Pr.0**	**Pr.46**	496
Base frequency	**Pr.3**	**Pr.47**	497
Acceleration time	**Pr.7**	**Pr.44**	187
Deceleration time	**Pr.8**	**Pr.44, Pr.45**	187
Electronic thermal O/L relay	**Pr.9**	**Pr.51**	225
Free thermal	**Pr.600 to Pr.604**	**Pr.692 to Pr.696**	
Motor permissible load level *1	**Pr.607**	**Pr.608**	225
Stall prevention	**Pr.22**	**Pr.48, Pr.49**	248
Applicable motor *1	**Pr.71**	**Pr.450**	337
Motor constant *1	**Pr.80 to Pr.84, Pr.89 to Pr.94, Pr.298, Pr.702, Pr.706, Pr.707, Pr.711, Pr.712, Pr.717, Pr.721, Pr.724, Pr.725, Pr.859**	**Pr.453 to Pr.457, Pr.560, Pr.569, Pr.458 to Pr.462, Pr.738 to Pr.747, Pr.860**	341, 351
Offline auto tuning *1	**Pr.96**	**Pr.463**	341, 351
Online auto tuning *1	**Pr.95**	**Pr.574**	359
PID control	**Pr.127 to Pr.134**	**Pr.753 to Pr.758**	378
PID Pre-charge function	**Pr.760 to Pr.764**	**Pr.765 to Pr.769**	402
Speed control gain	**Pr.820, Pr.821**	**Pr.830, Pr.831**	154
Analog input filter	**Pr.822**	**Pr.832**	313
Torque control gain	**Pr.824, Pr.825**	**Pr.834, Pr.835**	154
Torque detection filter	**Pr.827**	**Pr.837**	158

*1 The function can be changed by switching the RT signal ON/OFF while the inverter is stopped. If a signal is switched during operation, the operation method changes after the inverter stops. (**Pr.450** ≠ 9999)

NOTE

- RT signal is assigned to the terminal RT in the initial status. Set "3" in any of **Pr.178 to Pr.189 (input terminal function selection)** to assign the RT signal to another terminal.
- Changing the terminal assignment using **Pr.178 to Pr.189 (input terminal function selection)** may affect the other functions. Set parameters after confirming the function of each terminal.

Parameters referred to

Pr.178 to Pr.189 (input terminal function selection) page 329

5.9.11 Start signal operation selection

Operation of start signal (STF/STR) can be selected.
Select the stopping method (deceleration to stop or casting) at turn-OFF of the start signal.
Use this function to stop a motor with a mechanical brake at turn-OFF of the start signal.

Pr.	Name	Initial value	Setting range	Description	
				Start signal (STF/STR)	Stop operation (Refer to page 507.)
250 G106	Stop selection	9999	0 to 100 s	STF signal: Forward rotation start STR signal: Reverse rotation start	Turn OFF the start signal and it will coast to stop after the specified time period. When set to 1000 s to 1100 s, it will coast to stop after (**Pr.250** - 1000) s.
			1000 s to 1100 s	STF signal: Start signal STR signal: Forward/reverse rotation signal	
			9999	STF signal: Forward rotation start STR signal: Reverse rotation start	It will perform deceleration stop when the start signal is turned OFF.
			8888	STF signal: Start signal STR signal: Forward/reverse rotation signal	

◆2-wire type (STF, STR signal)

- The following figure shows the connection in 2-wire type.
- As an initial setting, forward/reverse rotation signals (STF/STR) acts as both start and stop signals. Either one turned ON will be enabled, and the operation will follow that signal. The motor will perform a deceleration stop when both are turned OFF (or both are turned ON) during the operation.
- There are methods such as inputting 0 to 10 VDC between the speed setting input terminals 2 and 5, or **Pr.4 to Pr.6 multi-speed setting (fast, medium, slow)** for the frequency setting signal. (For multi-speed operation, refer to page 222.)
- By setting **Pr.250** = "1000 to 1100, 8888", STF signal becomes start command and STF signal becomes forward/reverse command.

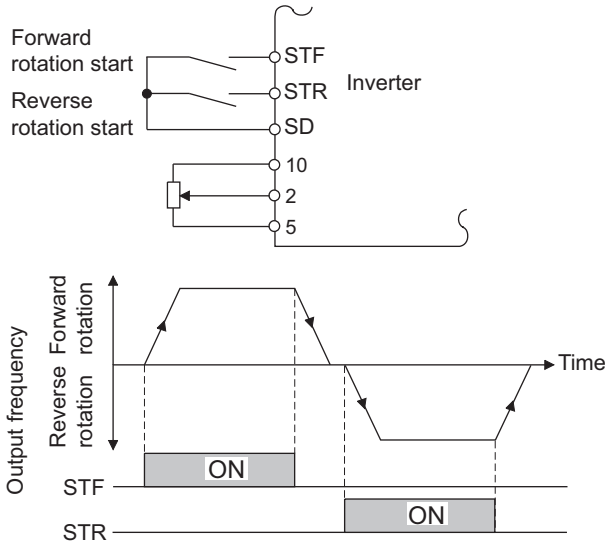

2-wire type connection example (Pr.250 = "9999")

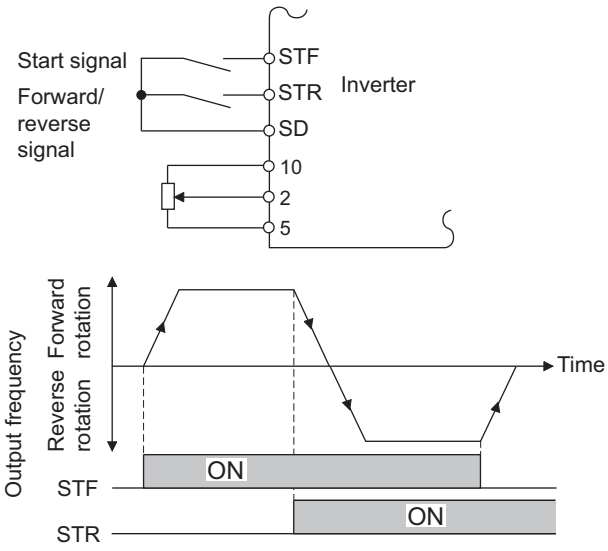

2-wire type connection example (Pr.250 = "8888")

NOTE

- By setting **Pr.250** = "0 to 100, 1000 to 1100", it will perform coast to stop when the start command is turned OFF. (Refer to page 507.)
- The STF and STR signals are assigned to the terminals STF and STR in the initial status. STF signal can be assigned to a terminal by **Pr.178 STF terminal function selection**, and STR signal can be assigned to a terminal by **Pr.179 STR terminal function selection**.

◆3-wire type (STF, STR, STP (STOP) signal)

- The following figure shows the connection in 3-wire type.
- Start self-holding function is enabled when the STP (STOP) signal is turned ON. In such case, forward/reverse signal will only operate as start signal.
- Even if start signal (STF or STR) is turned ON and then OFF, the start signal will be maintained and it will start. To change the rotation direction, turn STR (STF) ON once and then OFF.
- The inverter will perform deceleration stop by turning the STP (STOP) signal OFF once.

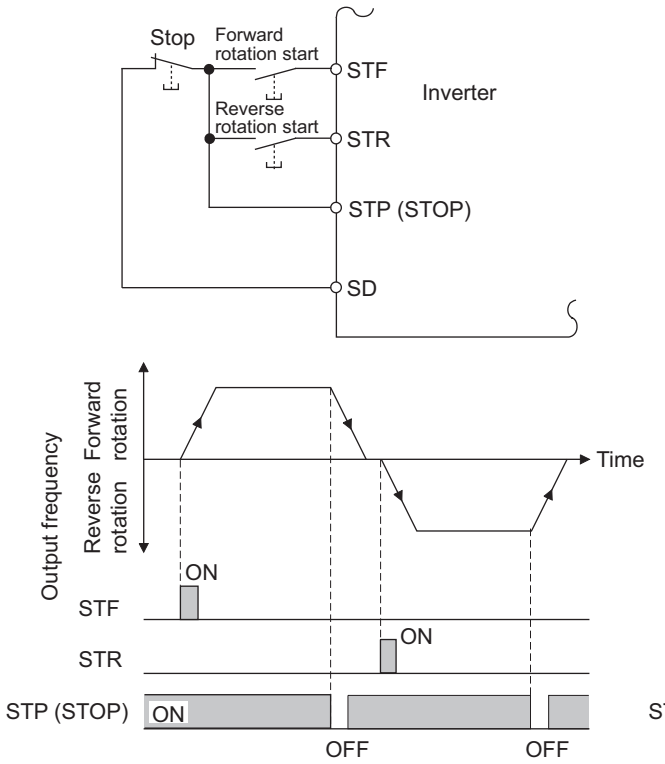

3-wire type connection example (Pr.250 = "9999")

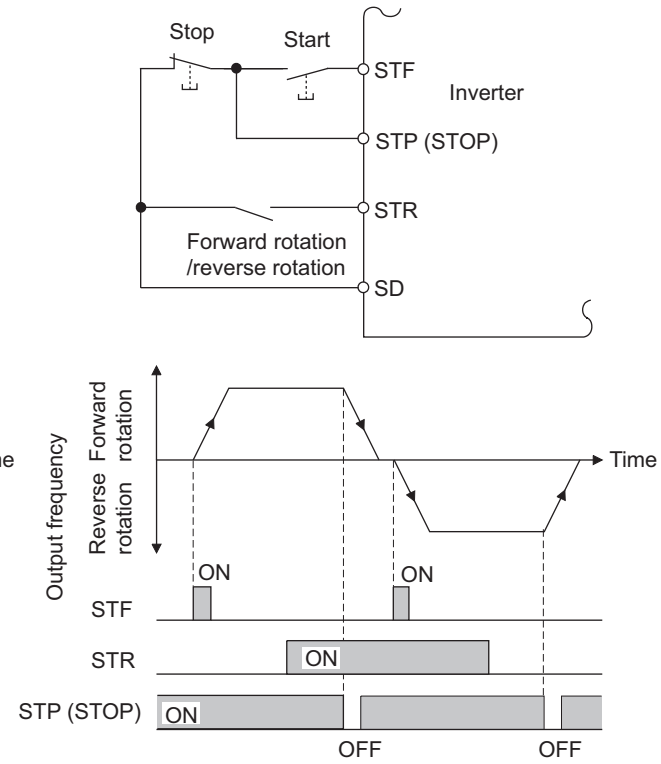

3-wire type connection example (Pr.250 = "8888")

NOTE

- The STP (STOP) signal is assigned to the terminal STP (STOP) by the initial setting. Set "25" in any of **Pr.178 to Pr.189** to assign the STP (STOP) signal to another terminal.
- When the JOG operation is enabled by turning ON the JOG signal, STOP signal will be disabled.
- Even when the output is stopped by turning ON the MRS signal, self-holding function is not canceled.

◆Start signal selection

STF	STR	Pr.250 setting and inverter condition	
		0 to 100 s, 9999	1000 s to 1100 s, 8888
OFF	OFF	Stop	Stop
OFF	ON	Reverse rotation	
ON	OFF	Forward rotation	Forward rotation
ON	ON	Stop	Reverse rotation

Parameters referred to

Pr.4 to Pr.6 (multi-speed setting) page 222

Pr.178 to Pr.189 (input terminal function selection) page 329

5.10 (C) Motor constant parameters

Purpose	Parameter to set			Refer to page
To select the motor to be used	Applicable motor	P.C100, P.C200	Pr.71, Pr.450	337
To run by maximizing the performance of the induction motor	Offline auto tuning	P.C000, P.C100 to P.C105, P.C107, P.C108, P.C110, P.C120 to P.C126, P.C200 to P.C205, P.C207, P.C208, P.C210 and P.C220 to P.C226	Pr.9, Pr.51, Pr.71, Pr.80 to Pr.84, Pr.90 to Pr.94, Pr.96, Pr.453 to Pr.463, Pr.684, Pr.707, Pr.724, Pr.744, Pr.745, Pr.859 and Pr.860	341
To run by maximizing the performance of the PM motor	PM motor offline auto tuning	P.C000, P.C100 to P.C108, P.C110, P.C120, P.C122, P.C123, P.C126, P.C130 to P.C133, P.C150, P.C182, P.C185, P.C200 to P.C208, P.C210, P.C220, P.C222, P.C223, P.C226, P.C230 to P.C233, P.C282 and P.C285	Pr.9, Pr.51, Pr.71, Pr.80, Pr.81, Pr.83, Pr.84, Pr.90, Pr.92, Pr.93, Pr.96, Pr.450, Pr.453, Pr.454, Pr.456 to Pr.458, Pr.460, Pr.461, Pr.463, Pr.684, Pr.702, Pr.706, Pr.707, Pr.711, Pr.712, Pr.717, Pr.721, Pr.724, Pr.725, Pr.738 to Pr.747, Pr.788, Pr.859, Pr.860 and Pr.1002	351
To perform high accuracy operation without being affected by temperature and high-torque/ultra-low speed	Online auto tuning	P.C111 and P.C211	Pr.95, Pr.574	341

5.10.1 Applied motor

By setting the applied motor type, the thermal characteristic appropriate for the motor can be selected.
When using a constant-torque or PM motor, the electronic thermal O/L relay is set according to the used motor.
If the Advanced magnetic flux vector control or PM motor control is selected, the motor constant necessary for control (SF-PR, SF-JR, SF-HR, SF-JRCA, SF-HRCA, MM-EFS, MM-THE4, etc.) is also selected at the same time.

Pr.	Name	Initial value	Setting range	Description
71 C100	Applied motor	0	0 to 6, 13 to 16, 20, 23, 24, 40, 43, 44, 50, 53, 54, 70, 73, 74, 210, 213, 214, 8090, 8093, 8094, 9090, 9093, 9094	By selecting a motor, the thermal characteristic and motor constant of each motor are set.
450 C200	Second applied motor	9999	0, 1, 3 to 6, 13 to 16, 20, 23, 24, 40, 43, 44, 50, 53, 54, 70, 73, 74, 210, 213, 214, 8090, 8093, 8094, 9090, 9093, 9094	Set it when using the second motor. (the same specifications as **Pr.71**)
			9999	The function is disabled.

◆Setting the applied motor

• Refer to the following list and set the parameters according to the applied motor.

Pr.71	Pr.450	Motor	Constant value range when performing offline auto tuning (increment)	Operational characteristic of the electronic thermal O/L relay		
				Standard	Constant-torque	PM
0 (**Pr.71** initial value)		Standard motor (such as SF-JR)	**Pr.82(Pr.455) and Pr.859(Pr.860)** • 0 to 500 A, 9999 (0.01 A)*1 • 0 to 3600 A, 9999 (0.1 A)*2 **Pr.90(Pr.458) and Pr.91(Pr.459)** • 0 to 50 Ω, 9999 (0.001 Ω)*1 • 0 to 400 mΩ, 9999 (0.01 mΩ)*2 **Pr.92(Pr.460) and Pr.93(Pr.461) (Induction motor)** • 0 to 6000 mH, 9999 (0.1 mH)*1 • 0 to 400 mH, 9999 (0.01 mH)*2 **Pr.92(Pr.460) and Pr.93(Pr.461) (PM motor)** • 0 to 500 mH, 9999 (0.01 mH)*1 • 0 to 50 mH, 9999 (0.001 mH)*2 **Pr.94(Pr.462)** • 0 to 100%, 9999(0.1%)*1 • 0 to 100%, 9999(0.01%)*2 **Pr.706(Pr.738)** • 0 to 5000 mV/(rad/s), 9999 (0.1 mV/(rad/s))	○		
1		Constant-torque motor (SF-JRCA, etc.)			○	
2	—	Standard motor (such as SF-JR) Adjustable 5 points V/F (Refer to page 501.)		○		
20		Mitsubishi standard motor (SF-JR 4P 1.5 kW or lower)			○	
40		Mitsubishi high-efficiency motor SF-HR		○		
50		Mitsubishi constant-torque motor SF-HRCA			○	
70		Mitsubishi high-performance energy-saving motor SF-PR			○	
210		IPM motor MM-EFS/MM-THE4				○
8090		IPM motor (other than MM-EFS/MM-THE4)			○	
9090		SPM motor			○	
3 (4)*3		Standard motor (such as SF-JR)	**Pr.82(Pr.455), Pr.859(Pr.860), Pr.90(Pr.458), Pr.91(Pr.459), Pr.92(Pr.460), Pr.93(Pr.461), Pr.94(Pr.462) and Pr.706(Pr.738)** • Internal data value 0 to 65534, 9999 (1) The display increment can be changed in **Pr.684**.	○		
13 (14)*3		Constant-torque motor (SF-JRCA, etc.)			○	
23 (24)*3		Mitsubishi standard motor (SF-JR 4P 1.5 kW or lower)			○	
43 (44)*3		Mitsubishi high-efficiency motor SF-HR		○		
53 (54)*3		Mitsubishi constant-torque motor SF-HRCA			○	
73 (74)*3		Mitsubishi high-performance energy-saving motor SF-PR			○	
213 (214)*3		IPM motor MM-EFS/MM-THE4				○
8093 (8094)*3		IPM motor (other than MM-EFS/MM-THE4)			○	
9093 (9094)*3		SPM motor			○	
5		Standard motor	Star connection **Pr.82(Pr.455) and Pr.859(Pr.860)** • 0 to 500 A, 9999 (0.01 A) *1 • 0 to 3600 A, 9999 (0.1 A) *2 **Pr.90(Pr.458) and Pr.91(Pr.459)** • 0 to 50 Ω, 9999 (0.001 Ω) *1 • 0 to 400 mΩ, 9999 (0.01 mΩ) *2 **Pr.92(Pr.460) and Pr.93(Pr.461)** • 0 to 50 Ω, 9999 (0.001 Ω) *1 • 0 to 3600 mΩ, 9999 (0.1 mΩ) *2 **Pr.94(Pr.462)** • 0 to 500 Ω, 9999 (0.01 Ω) *1 • 0 to 100 Ω, 9999 (0.01 Ω) *2	○		
15		Constant-torque motor			○	
6		Standard motor		○		
16		Constant-torque motor			○	
—	9999 (initial value)	No second applied motor				

*1 For the FR-F820-02330(55K) or lower and FR-F840-01160(55K) or lower.

*2 For the FR-F820-03160(75K) or higher and FR-F840-01800(75K) or higher.

*3 The same operation is performed for the both settings.

NOTE

• Regardless of the **Pr.71(Pr.450)** setting, offline auto tuning can be performed according to **Pr.96(Pr.463) Auto tuning setting/status**. (Refer to page 341 for offlne auto tuning.)

◆Using two types of motors (RT signal, Pr.450)

- When using two types of motors with one inverter, set **Pr.450 Second applied motor**.
- The setting value "9999" (initial value) disables second applied motor.
- If **Pr.450** ≠ 9999, the following parameters will be enabled by turning ON the Second function selection(RT) signal.

Function	RT signal ON (second motor)	RT signal OFF (first motor)
Electronic thermal O/L relay	**Pr.51**	**Pr.9**
Applied motor	**Pr.450**	**Pr.71**
Motor capacity	**Pr.453**	**Pr.80**
Number of motor poles	**Pr.454**	**Pr.81**
Motor excitation current	**Pr.455**	**Pr.82**
Rated motor voltage	**Pr.456**	**Pr.83**
Rated motor frequency	**Pr.457**	**Pr.84**
Motor constant (R1)	**Pr.458**	**Pr.90**
Motor constant (R2)	**Pr.459**	**Pr.91**
Motor constant (L1)/d-axis inductance (Ld)	**Pr.460**	**Pr.92**
Motor constant (L2)/q-axis inductance (Lq)	**Pr.461**	**Pr.93**
Motor constant (X)	**Pr.462**	**Pr.94**
Auto tuning setting/status	**Pr.463**	**Pr.96**
Frequency search gain	**Pr.560**	**P.r298**
Online auto tuning selection	**Pr.574**	**Pr.95**
Induced voltage constant (phi f)	**Pr.738**	**Pr.706**
Motor Ld decay ratio	**Pr.739**	**Pr.711**
Motor Lq decay ratio	**Pr.740**	**Pr.712**
Starting resistance tuning compensation	**Pr.741**	**Pr.717**
Starting magnetic pole position detection pulse width	**Pr.742**	**Pr.721**
Maximum motor frequency	**Pr.743**	**Pr.702**
Motor inertia (integer)	**Pr.744**	**Pr.707**
Motor inertia (exponent)	**Pr.745**	**Pr.724**
Motor protection current level	**Pr.746**	**Pr.725**
Torque current/Rated PM motor current	**Pr.860**	**Pr.859**

NOTE

- The RT signal is a second function selection signal. The RT signal also enables other second functions. (Refer to page 333.)
- The RT signal is assigned to the terminal RT in the initial status. Set "3" in any of **Pr.178 to Pr.189 (input terminal function selection)** to assign the RT signal to another terminal.
- Changing the terminal assignment using **Pr.178 to Pr.189 (input terminal function selection)** may affect the other functions. Set parameters after confirming the function of each terminal.

◆SF-PR heavy duty setting

- When the SF-PR motor is selected (**Pr.71**="70, 73, 74"), the SF-PR heavy duty setting can be selected by setting **Pr.81 Number of motor poles** according to the number of the SF-PR motor poles.
- When the SF-PR heavy duty setting is selected, the **Pr.0 Torque boost** setting is automatically changed to enable output of the 6 Hz 150% torque under V/F control.

NOTE

- When using the SF-PR heavy duty setting, set **Pr.14 Load pattern selection** = "0".
- When the **Pr.0** setting is changed from its initial value, the automatic change is not performed.

◆Automatic change of Pr.0 Torque boost and Pr.12 DC injection brake operation voltage

- When initial values are set in **Pr.0** and **Pr.12**, the **Pr.0** and **Pr.12** settings are automatically changed to the values in the table below by changing the **Pr.71** setting.

Inverter		Pr.0 value (%) after automatic change						Pr.12 value (%) after automatic change		
				SF-PR *3						
				Heavy duty setting			Light duty setting			
FR-F820-[]	FR-F840-[]	Standard motor *1	Constant-torque motor *2	Pr.81 =2	Pr.81 =4	Pr.81 =6	Pr.81≠2,4,6	Standard motor *1	Constant-torque motor *2	SF-PR *3
00046(0.75K)	00023(0.75K)	6	6	7.4	6	6.4	4	4	4	4
00077(1.5K)	00038(1.5K)	4	4	5.8	5	3.7	3	4	4	2.5
00105(2.2K)	00052(2.2K)	4	4	6	4.5	3.3	2.5	4	4	2.5
00167(3.7K)	00083(3.7K)	4	4	6.4	4.5	4.2	2.5	4	4	2.5
00250(5.5K)	00126(5.5K)	3	2	4.5	3.7	3.3	2	4	2	2
00340(7.5K)	00170(7.5K)	3	2	4.4	4.5	3.8	2	4	2	2
00490(11K)	00250(11K)	2	2	3.5	3.3	3.5	1.5	2	2	1.5
00630(15K)	00310(15K)	2	2	4.5	3	3.5	1.5	2	2	1.5
00770(18.5K)	00380(18.5K)	2	2	4	3.2	3	1.5	2	2	1.5
00930(22K)	00470(22K)	2	2	2.5	3.4	3	1.5	2	2	1
01250(30K)	00620(30K)	2	2	3	2	2.5	1	2	2	1
01540(37K)	00770(37K)	2	2	2	2.5	2.6	1	2	2	1
01870(45K)	00930(45K)	1.5	1.5	2	2	2.4	1	2	2	1
02330(55K)	01160(55K)	1.5	1.5	2	2	0.7	0.7	2	2	1
03160(75K) or higher	01800(75K) or higher	1	1	1	1	1	1	1	1	1

*1 When changed to **Pr.71** = "0, 2 to 6, 20, 23, 24, 40, 43, or 44" (standard motor)
*2 When changed to **Pr.71** = "1, 13 to 16, 50, 53, or 54" (constant-torque motor)
*3 When changed to **Pr.71** = "70, 73, or 74" (SF-PR)

NOTE

- When the **Pr.0** and **Pr.12** settings are changed from their initial values, the automatic change is not performed.

Caution

- **Make sure to set this parameter correctly according to the motor used. Incorrect setting may cause the motor and inverter to overheat and burn.**

Parameters referred to

Pr.0 Torque boost page 496
Pr.12 DC injection brake operation voltage page 502
Pr.14 Load pattern selection page 499
Pr.96 Auto tuning setting/status page 341
Pr.100 to Pr.109 (Adjustable 5 points V/F) page 501
Pr.178 to Pr.189 (input terminal function selection) page 329
Pr.684 Tuning data unit switchover page 341

5.10.2 Offline auto tuning Magnetic flux

The offline auto tuning enables the optimal operation of an motor.

- What is offline auto tuning?
  Under Advanced magnetic flux vector control operation, measuring motor constants automatically (offline auto tuning) enables optimal operation of motors even when motor constants vary, when a motor of another company is used or when the wiring distance is long.

For the offline auto tuning for a PM motor, refer to page 351.

Pr.	Name	Initial value	Setting range	Description
684 C000	Tuning data unit switchover	0	0	Internal data converted value
			1	The value is indicated with "A, Ω, mH or %".
71 C100	Applied motor	0	0 to 6, 13 to 16, 20, 23, 24, 40, 43, 44, 50, 53, 54, 70, 73, 74, 210, 213, 214, 8090, 8093, 8094, 9090, 9093, 9094	By selecting a motor, the thermal characteristic and motor constant of each motor are set.
80 C101	Motor capacity	9999	0.4 to 55 kW*1	Set the applied motor capacity.
			0 to 3600 kW*2	
			9999	V/F control
81 C102	Number of motor poles	9999	2, 4, 6, 8, 10, 12	Set the number of motor poles.
			9999	V/F control
9 C103	Electronic thermal O/L relay	Rated inverter current	0 to 500 A*1	Set the rated motor current.
			0 to 3600 A*2	
83 C104	Rated motor voltage	200/400 V*3	0 to 1000 V	Set the rated motor voltage (V).
84 C105	Rated motor frequency	9999	10 to 400 Hz	Set the rated motor frequency (Hz).
			9999	Use the value set in **Pr.3 Base frequency**.
707 C107	Motor inertia (integer)	9999	10 to 999, 9999	Set the motor inertia. 9999: Uses the constant value of Mitsubishi motor (SF-PR, SF-JR, SF-HR, SF-JRCA, SF-HRCA and so on).
724 C108	Motor inertia (exponent)	9999	0 to 7, 9999	
96 C110	Auto tuning setting/ status	0	0	No offline auto tuning
			1	Performs offline auto tuning without rotating the motor
			11	Performs offline auto tuning without rotating the motor (V/F control, IPM motor MM-EFS/MM-THE4) (Refer to page 351)
			101	Performs offline auto tuning by rotating the motor
90 C120	Motor constant (R1)	9999	0 to 50 Ω, 9999*1 *4	Tuning data (The value measured by offline auto tuning is automatically set.) 9999: Uses the constant value of Mitsubishi motor (SF-PR, SF-JR, SF-HR, SF-JRCA, SF-HRCA and so on).
			0 to 400 mΩ, 9999*2 *4	
91 C121	Motor constant (R2)	9999	0 to 50 Ω, 9999*1 *4	
			0 to 400 mΩ, 9999*2 *4	
92 C122	Motor constant (L1)/ d-axis inductance (Ld)	9999	0 to 6000 mH, 9999*1 *4	
			0 to 400 mH, 9999*2 *4	
93 C123	Motor constant (L2)/ q-axis inductance (Lq)	9999	0 to 6000 mH, 9999*1 *4	
			0 to 400 mH, 9999*2 *4	
94 C124	Motor constant (X)	9999	0 to 100%, 9999 *4	
82 C125	Motor excitation current	9999	0 to 500 A, 9999*1 *4	
			0 to 3600 A, 9999*2 *4	
859 C126	Torque current/Rated PM motor current	9999	0 to 500 A, 9999*1*4	
			0 to 3600 A, 9999*2*4	

(C) Motor constant parameters

Pr.	Name	Initial value	Setting range	Description
298 A711	Frequency search gain	9999	0 to 32767	The offline auto tuning automatically sets the gain required for the frequency search.
			9999	Uses the constant value of Mitsubishi motor (SF-PR, SF-JR, SF-HR, SF-JRCA, SF-HRCA and so on).
450 C200	Second applied motor	9999	0, 1, 3 to 6, 13 to 16, 20, 23, 24, 40, 43, 44, 50, 53, 54, 70, 73, 74, 210, 213, 214, 8090, 8093, 8094, 9090, 9093, 9094	Set this parameter when using the second motor. (the same specifications as **Pr.71**).
			9999	The function is disabled.
453 C201	Second motor capacity	9999	0.4 to 55 kW∗1	Set the capacity of the second motor.
			0 to 3600 kW∗2	
			9999	V/F control
454 C202	Number of second motor poles	9999	2, 4, 6, 8, 10, 12	Set the number of poles of the second motor.
			9999	V/F control
51 C203	Second electronic thermal O/L relay	9999	0 to 500 A∗1	This function is enabled when the RT signal is ON. Set the rated motor current.
			0 to 3600 A∗2	
			9999	Second electronic thermal O/L relay disabled
456 C204	Rated second motor voltage	200/400 V∗3	0 to 1000 V	Set the rated voltage (V) of the second motor.
457 C205	Rated second motor frequency	9999	10 to 400 Hz	Set the rated frequency (Hz) of the second motor.
			9999	Use the **Pr.84 Rated motor frequency** setting.
744 C207	Second motor inertia (integer)	9999	10 to 999, 9999	Set the inertia of the second motor. 9999: Uses the constant value of Mitsubishi motor (SF-PR, SF-JR, SF-HR, SF-JRCA, SF-HRCA and so on).
745 C208	Second motor inertia (exponent)	9999	10 to 7, 9999	
463 C210	Second motor auto tuning setting/status	0	0	No auto tuning for the second motor.
			1	Performs offline auto tuning without rotating the second motor
			11	Performs offline auto tuning without rotating the motor (V/F control, IPM motor MM-EFS/MM-THE4) (Refer to **page 351**)
			101	Performs offline auto tuning by rotating the second motor
458 C220	Second motor constant (R1)	9999	0 to 50 Ω, 9999∗1 ∗4	Tuning data of the second motor (The value measured by offline auto tuning is automatically set.) 9999: Uses the constant value of Mitsubishi motor (SF-PR, SF-JR, SF-HR, SF-JRCA, SF-HRCA and so on).
			0 to 400 mΩ, 9999∗2 ∗4	
459 C221	Second motor constant (R2)	9999	0 to 50 Ω, 9999∗1 ∗4	
			0 to 400 mΩ, 9999∗2 ∗4	
460 C222	Second motor constant (L1) / d-axis inductance (Ld)	9999	0 to 6000 mH, 9999∗1 ∗4	
			0 to 400 mH, 9999∗2 ∗4	
461 C223	Second motor constant (L2) / q-axis inductance (Lq)	9999	0 to 6000 mH, 9999∗1 ∗4	
			0 to 400 mH, 9999∗2 ∗4	
462 C224	Second motor constant (X)	9999	0 to 100%, 9999 ∗4	
455 C225	Second motor excitation current	9999	0 to 500 A, 9999∗1 ∗4	
			0 to 3600 A, 9999∗2 ∗4	
860 C226	Second motor torque current/Rated PM motor current	9999	0 to 500 A, 9999∗1 ∗4	
			0 to 3600 A, 9999∗2 ∗4	
560 A712	Second frequency search gain	9999	0 to 32767	The offline auto tuning automatically sets the gain required for the frequency search of the second motor.
			9999	Uses the constant value of Mitsubishi motor (SF-PR, SF-JR, SF-HR, SF-JRCA, SF-HRCA and so on).

∗1 For the FR-F820-02330(55K) or lower and FR-F840-01160(55K)or lower.

∗2 For the FR-F820-03160(75K) or higher and FR-F840-01800(75K)or higher.

∗3 Differs according to the voltage class. (200 V/400 V)

∗4 The setting range and unit change according to the **Pr.71** (**Pr.450**) setting.

POINT

- The function is enabled under Advanced magnetic flux vector control.
- Even if a motor other than Mitsubishi standard motors (SF-JR 0.4 kW or higher), high-efficiency motors (SF-HR 0.4 kW or higher), Mitsubishi constant-torque motors (SF-JRCA 4P, SF-HRCA 0.4 kW to 55 kW), or Mitsubishi high-performance energy-serving motor (SF-PR), such as other manufacturers' induction motors, SF-JRC, SF-TH, etc., is used, or when the wiring length is long (approx. 30 m or longer), a motor can run with the optimum operation characteristics by using the offline auto tuning function.
- Tuning is enabled even when a load is connected to the motor.
- During offline auto tuning, the motor rotation can be locked (**Pr.96** = "1") or unlocked (**Pr.96** = "101"). The tuning is more accurate when the motor can rotate (unlocked).
- Reading/writing of the motor constants tuned by offline auto tuning are enabled. The offline auto tuning data (motor constants) can be copied to another inverter with the operation panel.
- The offline auto tuning status can be monitored with the operation panel and the parameter unit.

◆Before performing offline auto tuning

Check the following points before performing offline auto tuning:

- A value other than "9999" is set in **Pr.80 and Pr.81**, and Advanced magnetic flux vector control.
- A motor is connected. (The motor should not be rotated by the force applied from outside during the tuning.)
- For the motor capacity, the rated motor current should be equal to or less than the rated inverter current. (It must be 0.4 kW or higher.) If a motor with substantially low rated current compared with the rated inverter current is used, speed and torque accuracies may deteriorate due to torque ripples, etc. Set the rated motor current to about 40% or higher of the rated inverter current.
- The target motor is other than a high-slip motor, a high-speed motor, or a special motor.
- The highest frequency is 400 Hz.
- The motor may rotate slightly even if the offline auto tuning without motor rotation (**Pr.96 Auto tuning setting/status** = "1") is selected. (The slight motor rotation does not affect the tuning performance.) Fix the motor securely with a mechanical brake, or before tuning, make sure that it is safe even if the motor rotates. (Caution is required especially in vertical lift applications.)
- Check the following points for the offline auto tuning with motor rotation (**Pr.96 Auto tuning setting/status** = "101").
  Torque is not sufficient during tuning.
  The motor can be rotated up to the speed close to the rated speed.
  The mechanical brake is released.
- Offline auto tuning is not performed correctly when the surge voltage suppression filter (FR-ASF-H/FR-BMF-H) are inserted between the inverter and motor. Be sure to remove them before performing tuning.

◆Setting

• To perform tuning, set the following parameters about the motor.

First motor Pr.	Second motor Pr.	Name	Initial value	Description
80	453	Motor capacity	9999 (V/F control)	Set the motor capacity (kW).
81	454	Number of motor poles	9999 (V/F control)	Set the number of motor poles (2 to 12).
9	51	Electronic thermal O/L relay	Rated inverter current	Set the rated motor current (A).
83	456	Rated motor voltage	200 V/400 V*1	Set the rated motor voltage (V) printed on the motor's rating plate.
84	457	Rated motor frequency	9999	Set the rated motor frequency (Hz). When the setting is "9999", the **Pr.3 Base frequency** setting is used.
71	450	Applied motor	0 (standard motor)	Set this parameter according to the motor.*2 Three types of motor constant setting ranges, units and tuning data can be stored according to settings.
96	463	Auto tuning setting/ status	0	Set "1" or "101". 1: Performs tuning without rotating the motor. (Excitation noise occurs at this point.) 101: Performs tuning without rotating the motor. The motor can rotate up to the speed near the rated motor frequency.

*1 Differs according to the voltage class. (200 V/400 V)

*2 According to the **Pr.71** setting, the range of the motor constant parameter setting values and units can be changed. Set the **Pr.71** Applied motor setting according to the motor to be used and the motor constant setting range. (For other setting values of **Pr.71**, refer to page 337.)

Motor		Pr.71 setting		
		Motor constant parameter mH, % and A unit setting	Motor constant parameter Internal data setting	Motor constant parameter Ω, mΩ and A unit setting
Mitsubishi standard motor Mitsubishi high-efficiency motor	SF-JR and SF-TH	0 (initial value)	3 (4)	—
	SF-JR 4P 1.5 kW or lower	20	23 (24)	—
	SF-HR	40	43 (44)	—
	Others	0 (initial value)	3 (4)	—
Mitsubishi constant-torque motor	SF-JRCA 4P and SF-TH (constant-torque)	1	13 (14)	—
	SF-HRCA	50	53 (54)	—
	Other (SF-JRC, etc.)	1	13 (14)	—
Mitsubishi high-performance energy-saving motor	SF-PR	70	73(74)	—
Other manufacturer's standard motor	—	0 (initial value)	3 (4)	5 (star connection motor) 6 (delta connection motor)
Other manufacturer's constant-torque motor	—	1	13 (14)	15 (star connection motor) 16 (delta connection motor)

NOTE

- If **Pr.11 DC injection brake operation time** = "0" or **Pr.12 DC injection brake operation voltage** = "0", offline auto tuning is performed considering **Pr.11 or Pr.12** is set to the initial value.
- If "star connection" or "delta connection" is incorrectly selected in **Pr.71**, Advanced magnetic flux vector control is not performed normally.

• For tuning accuracy improvement, set the following parameters when the motor constants are known in advance.

First motor Pr.	Second motor Pr.	Name	Mitsubishi motor (SF-JR, SF-HR, SF-JRCA, SF-HRCA)	Other motors
707	744	Motor inertia (integer)	9999 (initial value)	Motor inertia*3 Jm=**Pr.707** × 10^(- **Pr.724**) (kg/m^2)
724	745	Motor inertia (exponent)		

*3 The setting is valid only when a value other than "9999" is set in both **Pr.707** (**Pr.744**) and **Pr.724** (**Pr.745**).

◆Performing tuning

POINT

• Before performing tuning, check the monitor display of the operation panel or the parameter unit if the inverter is in the state ready for tuning. (Refer to 2) below.) Turning ON the start command while tuning is unavailable starts the motor.

• In the PU operation mode, press FWD / REV on the operation panel.

For External operation, turn ON the start command (STF signal or STR signal). Tuning will start.

NOTE

• Satisfy the required inverter start conditions to start offline auto tuning. For example, stop the input of MRS signal.

• To force tuning to end, use the MRS or RES signal or press STOP RESET on the operation panel.
(Turning the start signal (STF signal or STR signal) OFF also ends tuning.)

• During offline auto tuning, only the following I/O signals are valid. (initial value)
Input terminals <effective signals>: STP (STOP), OH, MRS, RT, RES, STF, STR, S1 and S2
Output terminals: RUN, OL, IPF, FM/CA, AM, A1B1C1 and SO

• When the rotation speed and the output frequency are selected for terminals FM/CA and AM, the progress status of offline auto tuning is output in fifteen steps from FM/CA and AM.

• Do not perform ON/OFF switching of the Second function selection(RT) signal during offline auto tuning. Auto tuning will not be performed properly.

• When the offline auto tuning is selected (**Pr.96 Auto tuning setting/status** = "101"), the motor rotates. Take caution and ensure the safety.

• Since the Inverter running (RUN) signal turns ON when tuning is started, pay close attention especially when a sequence which releases a mechanical brake by the RUN signal has been designed.

• When executing offline auto tuning, input the run command after switching ON the main circuit power (R/L1, S/L2, T/L3) of the inverter.

• While **Pr.79 Operation mode selection** = "7", turn the PU operation external interlock (X12) signal ON to tune in the PU operation mode.

• Monitor is displayed on the operation panel (FR-DU08) and the parameter unit (FR-PU07) during tuning as below.

Pr.96 setting value	1	101	1	101
	Parameter unit (FR-PU07) display		Operation panel (FR-DU08) display	
(1) Setting	READ:List 1 --- STOP PU	READ:List 101 --- STOP PU	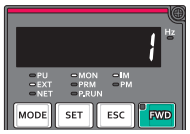	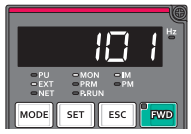
(2) During tuning	TUNE 2 STF FWD PU	TUNE 102 STF FWD PU	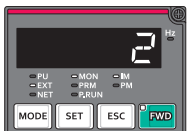	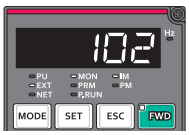
(3) Normal completion	TUNE 3 COMPLETION STF STOP PU	TUNE 103 COMPLETION STF STOP PU	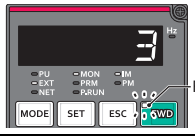 Flickering	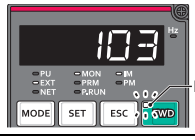 Flickering
(4) Forced end			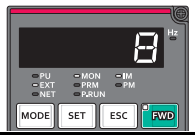	

(C) Motor constant parameters

- Note: Offline auto tuning time (with the initial setting)

Offline auto tuning setting	Time
No motor rotation (**Pr96** = "1")	Approx. 25 to 120 s (The time depends on the inverter capacity and motor type.)
With motor rotation (**Pr96** = "101)	Approx. 40 s (The following offline auto tuning time is set according to the acceleration/deceleration time setting. Offline auto tuning time = acceleration time + deceleration time + approx. 30 s)

- When offline auto tuning ends, press STOP RESET on the operation panel during PU operation. For External operation, turn OFF the start signal (STF signal or STR signal).
  This operation resets the offline auto tuning, and the PU's monitor display returns to the normal indication.
  (Without this operation, next operation cannot be started.)

NOTE

- The motor constants measured once in the offline auto tuning are stored as parameters and their data are held until the offline auto tuning is performed again. However, the tuning data is cleared by performing all parameter clear.
- Changing **Pr.71** (**Pr.450**) after tuning completion will change the motor constant. For example, if **Pr.71** = "3" is set after tuning is performed with **Pr.71** = "0", the tuning data becomes invalid. Set **Pr.71** = "0" again for using the tuning data.

- If offline auto tuning has ended in error (see the table below), motor constants are not set. Perform an inverter reset and restart tuning.

Error display	Error cause	Countermeasures
8	Forced end	Set **Pr.96** = "1" or "101" and try again.
9	Inverter protective function operation	Make the setting again.
91	The current limit (stall prevention) function is activated.	Set the acceleration/deceleration time longer. Set **Pr.156** = "1".
92	The converter output voltage has dropped to 75% of the rated voltage.	Check for the power supply voltage fluctuation. Check the **Pr.84 Rated motor frequency** setting.
93	Calculation error The motor is not connected.	Check the **Pr.83** and **Pr.84** settings. Check the motor wiring and make the setting again.
94	Rotation tuning frequency setting error (The frequency command for the tuning was given to exceed the maximum frequency setting, or to be in the frequency jump range.)	Check the **Pr.1 Maximum frequency** and **Pr.31** to **Pr.36** Frequency jump settings.

- When tuning is ended forcibly by pressing STOP RESET or turning OFF the start signal (STF or STR) during tuning, offline auto tuning does not end properly. (The motor constants have not been set.)
  Perform an inverter reset and restart tuning.
- If using a motor falling under the following conditions, set the value of **Pr.9 Electronic thermal O/L relay** as shown below after tuning is complete.
  a) If the rated power supply of the motor is 200/220 V(400/440 V) 60 Hz, set the rated motor current multiplied by 1.1 in **Pr.9**.
  b) If using a motor with a temperature detector such as PTC thermistor and Klixon and performs motor overheat protection, set **Pr.9** = "0" (disables the motor overheat protection feature of the inverter).

NOTE

- An instantaneous power failure occurring during tuning will result in a tuning error. After power is restored, the inverter starts normal operation. Therefore, when STF (STR) signal is ON, the motor runs in the forward (reverse) rotation.
- Any alarm occurring during tuning is handled as in the normal operation. Note that even if a retry operation has been set, retry is not performed.
- The set frequency monitor displayed during the offline auto tuning is 0 Hz

Caution

- **Note that the motor may start running suddenly.**
- **For the offline auto tuning in vertical lift applications, etc., caution is required to avoid falling due to insufficient torque.**

◆Changing the motor constants

- If the motor constants are known, the motor constants can be set directly or set using data measured through offline auto tuning.
- According to the **Pr.71 (Pr.450)** setting, the range of the motor constant parameter setting values and units can be changed. The setting values are stored in the EEPROM as motor constant parameters, and three types of motor constants can be stored.

◆Changing the motor constants (If setting the Pr.92 and Pr.93 motor constants in units of mH)

- Set **Pr.71** as shown below.

Motor		Pr.71 setting
Mitsubishi standard motor Mitsubishi high-efficiency motor	SF-JR	0 (initial value)
	SF-JR 4P 1.5 kW or lower	20
	SF-HR	40
Mitsubishi constant-torque motor	SF-JRCA 4P	1
	SF-HRCA	50
Mitsubishi high-performance energy-saving motor	SF-PR	70

- Use the following formula to find the **Pr.94** setting value and set a given value as the motor constant parameter.

$$\text{The setting value of Pr.94} = \left(1 - \frac{M^2}{L1 \times L2}\right) \times 100(\%)$$

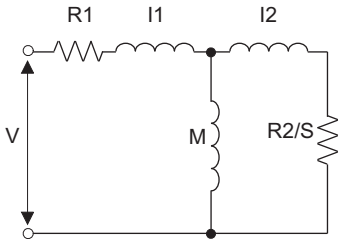

R1: Primary resistance
R2: Secondary resistance
I1: Primary leakage inductance
I2: Secondary leakage inductance
M: Excitation inductance
S: Slip

L1= I1+ M: Primary inductance
L2= I2+ M: Secondary inductance

Equivalent circuit diagram of the motor

First motor Pr.	Second motor Pr.	Name	Setting range	Setting increments	Initial value
82	455	Motor excitation current (No-load current)	0 to 500 A, 9999*1	0.01 A*1	9999
			0 to 3600 A, 9999*2	0.1 A*2	
90	458	Motor constant (R1)	0 to 50 Ω, 9999*1	0.001 Ω*1	
			0 to 400 mΩ, 9999*2	0.01 mΩ*2	
91	459	Motor constant (R2)	0 to 50 Ω, 9999*1	0.001 Ω*1	
			0 to 400 mΩ, 9999*2	0.01 mΩ*2	
92	460	Motor constant (L1)/d-axis inductance (Ld)	0 to 6000 mH, 9999*1	0.1 mH*1	
			0 to 400 mH, 9999*2	0.01 mH*2	
93	461	Motor constant (L2)/q-axis inductance (Lq)	0 to 6000 mH, 9999*1	0.1 mH*1	
			0 to 400 mH, 9999*2	0.01 mH*2	
94	462	Motor constant (X)	0 to 100%, 9999	0.1%*1	
				0.01%*2	
859	860	Torque current/Rated PM motor current	0 to 500 A, 9999*1	0.01 A*1	
			0 to 3600 A, 9999*2	0.1 A*2	
298	560	Frequency search gain	0 to 32767, 9999	1	

*1 For the FR-F820-02330(55K) or lower and FR-F840-01160(55K) or lower.
*2 For the FR-F820-03160(75K) or higher and FR-F840-01800(75K) or higher.

NOTE

- If "9999" is set, tuning data will be invalid and the constant values for Mitsubishi motors (SF-PR, SF-JR, SF-HR, SF-JRCA, SF-HRCA and so on) are used.

◆Changing the motor constants (If setting motor constants in the internal data of the inverter)

- Set **Pr.71** as follows.

Motor		Pr.71 setting
Mitsubishi standard motor Mitsubishi high-efficiency motor	SF-JR and SF-TH	3 (4)
	SF-JR 4P 1.5 kW or lower	23 (24)
	SF-HR	43 (44)
	Others	3 (4)
Mitsubishi constant-torque motor	SF-JRCA 4P SF-TH (constant-torque)	13 (14)
	SF-HRCA	53 (54)
	Other (SF-JRC, etc.)	13 (14)
Mitsubishi high-performance energy-saving motor	SF-PR	73(74)
Other manufacturer's standard motor	—	3 (4)
Other manufacturer's constant-torque motor	—	13 (14)

- Set given values as the motor constant parameters. The displayed increments of the read motor constants can be changed with **Pr.684 Tuning data unit switchover**.

First motor Pr.	Second motor Pr.	Name	Pr.684 = 0 (initial value)		Pr.684 = 1		Initial value
			Setting range	Setting increments	Range indication	Unit indication	
82	455	Motor excitation current	0 to ***, 9999	1	0 to 500 A, 9999*1	0.01 A*1	9999
					0 to 3600 A, 9999*2	0.1 A*2	
90	458	Motor constant (R1)			0 to 50 Ω, 9999*1	0.001 Ω*1	
					0 to 400 mΩ, 9999*2	0.01 mΩ*2	
91	459	Motor constant (R2)			0 to 50 Ω, 9999*1	0.001 Ω*1	
					0 to 400 mΩ, 9999*2	0.01 mΩ*2	
92	460	Motor constant (L1)/d-axis inductance (Ld)			0 to 6000 mH, 9999*1	0.1 mH*1	
					0 to 400 mH, 9999*2	0.01 mH*2	
93	461	Motor constant (L2)/q-axis inductance (Lq)			0 to 6000 mH, 9999*1	0.1 mH*1	
					0 to 400 mH, 9999*2	0.01 mH*2	
94	462	Motor constant (X)			0 to 100%, 9999	0.1%*1	
						0.01%*2	
859	860	Torque current/Rated PM motor current			0 to 500 A, 9999*1	0.01 A*1	
					0 to 3600 A, 9999*2	0.1 A*2	
298	560	Frequency search gain	0 to 32767, 9999	1	0 to 32767, 9999	1	

*1 For the FR-F820-02330(55K) lower and FR-F840-01160(55K) or lower.

*2 For the FR-F820-03160(75K) or higher and FR-F840-01800(75K) or higher.

NOTE

- As the motor constants measured in the offline auto tuning have been converted into internal data (****), refer to the following setting example when making setting:
- Setting example: To slightly increase the **Pr.90** value (5%)
  If **Pr.90** = "2516" is displayed,
  the value is calculated with 2516 × 1.05 = 2641.8. Therefore set **Pr.90** = "2642".
  (The value displayed has been converted into a value for internal use. Hence, simple addition of a given value to the displayed value has no significance.)
- If "9999" is set, tuning data will be invalid and the constant values for Mitsubishi motors (SF-PR, SF-JR, SF-HR, SF-JRCA, SF-HRCA and so on) are used.

◆Changing the motor constants (If setting the Pr.92 and Pr.93 motor constants in units of [Ω])

• Set **Pr.71** as shown below.

Applicable motor	Pr.71 setting	
	Star connection motor	Delta connection motor
Standard motor	5	6
Constant-torque motor	15	16

• Set given values as the motor constant parameters.

Iq = torque current, I_{100} = rated current, I_0 = no load current

$$Iq = \sqrt{I_{100}^2 - I_0^2}$$

First motor Pr.	Second motor Pr.	Name	Setting range	Setting increments	Initial value
82	455	Motor excitation current (No-load current)	0 to 500 A, 9999*1	0.01 A*1	9999
			0 to 3600 A, 9999*2	0.1 A*2	
90	458	Motor constant (r1)	0 to 50 Ω, 9999*1	0.001 Ω*1	
			0 to 400 mΩ, 9999*2	0.01 mΩ*2	
91	459	Motor constant (r2)	0 to 50 Ω, 9999*1	0.001 Ω*1	
			0 to 400 mΩ, 9999*2	0.01 mΩ*2	
92	460	Motor constant (×1)	0 to 50 Ω, 9999*1	0.001 Ω*1	
			0 to 3600 mΩ, 9999*2	0.01 mΩ*2	
93	461	Motor constant (×2)	0 to 50 Ω, 9999*1	0.001 Ω*1	
			0 to 3600 mΩ, 9999*2	0.01 mΩ*2	
94	462	Motor constant (×m)	0 to 500 Ω, 9999*1	0.01 Ω	
			0 to 100 Ω, 9999*2		
859	860	Torque current/Rated PM motor current	0 to 500 A, 9999*1	0.01 A*1	
			0 to 3600 A, 9999*2	0.1 A*2	
298	560	Frequency search gain	0 to 32767, 9999	1	

*1 For the FR-F820-02330(55K) or lower and FR-F840-01160(55K) or lower.

*2 For the FR-F820-03160(75K) or higher and FR-F840-01800(75K) or higher.

NOTE

• If "star connection" or "delta connection" is incorrectly selected in **Pr.71**, Advanced magnetic flux vector control is not performed normally.

• If "9999" is set, tuning data will be invalid and the constant values for Mitsubishi motors (SF-PR, SF-JR, SF-HR, SF-JRCA, SF-HRCA and so on) are used.

◆Tuning the second applied motor

- When one inverter switches the operation between two different motors, set the second motor in **Pr.450 Second applied motor**. (Refer to page 337.) In the initial setting, no second motor is applied.
- Turning ON the RT signal will enable the parameter settings for the second motor as shown below.

Function	RT signal ON (second motor)	RT signal OFF (first motor)
Motor capacity	**Pr.453**	**Pr.80**
Number of motor poles	**Pr.454**	**Pr.81**
Motor excitation current	**Pr.455**	**Pr.82**
Rated motor voltage	**Pr.456**	**Pr.83**
Rated motor frequency	**Pr.457**	**Pr.84**
Motor constant (R1)	**Pr.458**	**Pr.90**
Motor constant (R2)	**Pr.459**	**Pr.91**
Motor constant (L1)/d-axis inductance (Ld)	**Pr.460**	**Pr.92**
Motor constant (L2)/q-axis inductance (Lq)	**Pr.461**	**Pr.93**
Motor constant (X)	**Pr.462**	**Pr.94**
Auto tuning setting/status	**Pr.463**	**Pr.96**
Frequency search gain	**Pr.560**	**Pr.298**

NOTE

- The RT signal is assigned to the terminal RT in the initial status. Set "3" in any of **Pr.178 to Pr.189 (input terminal function selection)** to assign the RT signal to another terminal.
- Changing the terminal assignment using **Pr.178 to Pr.189 (input terminal function selection)** may affect the other functions. Set parameters after confirming the function of each terminal.

Parameters referred to

Pr.1 Maximum frequency ☞
Pr.9 Electronic thermal O/L relay ☞ page 225
Pr.31 to Pr.36 Frequency jump ☞
Pr.71 Applied motor ☞ page 337
Pr.156 Stall prevention operation selection ☞ page 248
Pr.178 to Pr.189 (input terminal function selection) ☞ page 329
Pr.190 to Pr.196 (output terminal function selection) ☞ page 288

5.10.3 Offline auto tuning for a PM motor (motor constants tuning) PM

The offline auto tuning for an PM motor enables the optimal operation of a PM motor.

- What is offline auto tuning?

  Under PM motor control, setting motor constants automatically (offline auto tuning) enables optimal operation of motors even when motor constants vary or when the wiring distance is long. IPM and SPM motors other than IPM motor MM-EFS/MM-THE4 can also be used.

For the offline auto tuning under Advanced magnetic flux vector control, refer to page 341.

Pr.	Name	Initial value	Setting range	Description
684 C000	Tuning data unit switchover	0	0	Internal data converted value
			1	The value is indicated with "A, Ω, mH or mV".
1002 C150	Lq tuning target current adjustment coefficient	9999	50 to 150%	Perform adjustment if the overcurrent protective function is activated during tuning.
			9999	No adjustment
71 C100	Applied motor	0	0 to 6, 13 to 16, 20, 23, 24, 40, 43, 44, 50, 53, 54, 70, 73, 74, 210, 213, 214, 8090, 8093, 8094, 9090, 9093, 9094	By selecting a motor, the thermal characteristic and motor constant of each motor are set.
80 C101	Motor capacity	9999	0.4 to 55 kW*1	Applied motor capacity setting.
			0 to 3600 kW*2	
			9999	V/F control
81 C102	Number of motor poles	9999	2, 4, 6, 8, 10, 12	Set the number of motor poles.
			9999	V/F control
9 C103	Electronic thermal O/L relay	Rated inverter current	0 to 500 A*1	Set the rated motor current.
			0 to 3600 A*2	
83 C104	Rated motor voltage	200/400 V*3	0 to 1000 V	Set the rated motor voltage (V).
84 C105	Rated motor frequency	9999	10 to 400 Hz	Set the rated motor frequency (Hz).
			9999	The MM-EFS/MM-THE4 constant is used when the IPM motor MM-EFS/MM-THE4 is selected, and the inverter internal data is used when a PM motor other than MM-EFS/MM-THE4 is selected. Use the correct setting according to the motor specification.
702 C106	Maximum motor frequency	9999	0 to 400 Hz	Set the maximum frequency of the motor.
			9999	The MM-EFS/MM-THE4 motor maximum frequency is used when the IPM motor MM-EFS/MM-THE4 is selected, and **Pr.84** setting is used when a PM motor other than MM-EFS/MM-THE4 is selected.
707 C107	Motor inertia (integer)	9999	10 to 999, 9999	Set the motor inertia. 9999: Uses MM-EFS/MM-THE4 inertia for IPM motor MM-EFS/MM-THE4.
724 C108	Motor inertia (exponent)	9999	0 to 7, 9999	
96 C110	Auto tuning setting/status	0	0, 101	No offline auto tuning.
			1	Performs offline auto tuning without rotating the motor. (motor other than IPM motor MM-EFS/MM-THE4)
			11	Performs offline auto tuning without rotating the motor (V/F control, IPM motor MM-EFS/MM-THE4).

(C) Motor constant parameters

Pr.	Name	Initial value	Setting range	Description
90 **C120**	**Motor constant (R1)**	9999	0 to 50 Ω, 9999*1*4	Tuning data (The value measured by offline auto tuning is automatically set.) 9999: Uses the MM-EFS/MM-THE4 constant for the IPM motor MM-EFS/MM-THE4, and the inverter internal data for a PM motor other than MM-EFS/MM-THE4.
			0 to 400 mΩ, 9999*2*4	
92 **C122**	**Motor constant (L1)/d-axis inductance (Ld)**	9999	0 to 500 mH, 9999*1*4	
			0 to 50 mH, 9999*2*4	
93 **C123**	**Motor constant (L2)/q-axis inductance (Lq)**	9999	0 to 500 mH, 9999*1*4	
			0 to 50 mH, 9999*2*4	
859 **C126**	**Torque current/Rated PM motor current**	9999	0 to 500 A, 9999*1*4	
			0 to 3600 A, 9999*2*4	
706 **C130**	**Induced voltage constant (phi f)**	9999	0 to 5000 mV/(rad/s)*4	Set this parameter according to the PM motor specifications.
			9999	The value calculated by the motor constant parameter setting is used.
711 **C131**	**Motor Ld decay ratio**	9999	0 to 100%, 9999	Tuning data (The value measured by offline auto tuning is automatically set.) 9999: Uses the MM-EFS/MM-THE4 constant for the IPM motor MM-EFS/MM-THE4, and the inverter internal data for a PM motor other than MM-EFS/MM-THE4.
712 **C132**	**Motor Lq decay ratio**	9999	0 to 100%, 9999	
717 **C182**	**Starting resistance tuning compensation**	9999	0 to 200%, 9999	
721 **C185**	**Starting magnetic pole position detection pulse width**	9999	0 to 6000 μs, 10000 to 16000 μs, 9999	
725 **C133**	**Motor protection current level**	9999	100 to 500%	Set the maximum current (OCT) level of the motor.
			9999	Uses the MM-EFS/MM-THE4 constant for the IPM motor MM-EFS/MM-THE4, and 200% for a PM motor other than MM-EFS/MM-THE4.
450 **C200**	**Second applied motor**	9999	0, 1, 3 to 6, 13 to 16, 20, 23, 24, 30, 33, 34, 40, 43, 44, 50, 53, 54, 70, 73, 74, 330, 333, 334, 8090, 8093, 8094, 9090, 9093, 9094	Set this parameter when using the second motor. (the same specifications as **Pr.71**).
			9999	The function is disabled.
453 **C201**	**Second motor capacity**	9999	0.4 to 55 kW*1	Set the capacity of the second motor.
			0 to 3600 kW*2	
			9999	V/F control
454 **C202**	**Number of second motor poles**	9999	2, 4, 6, 8, 10, 12	Set the number of poles of the second motor.
			9999	V/F control
51 **C203**	**Second electronic thermal O/L relay**	9999	0 to 500 A*1	Set the rated current of the second motor.
			0 to 3600 A*2	
			9999	Second electronic thermal O/L relay disabled.
456 **C204**	**Rated second motor voltage**	200/400 V*3	0 to 1000 V	Set the rated voltage (V) of the second motor.
457 **C205**	**Rated second motor frequency**	9999	10 to 400 Hz	Set the rated frequency (Hz) of the second motor.
			9999	The MM-EFS/MM-THE4 constant is used when the IPM motor MM-EFS/MM-THE4 is selected for the second motor, and the inverter internal data is used when a PM motor other than MM-EFS/MM-THE4 is selected. Use the correct setting according to the motor specification.
743 **C206**	**Second motor maximum frequency**	9999	0 to 400 Hz	Set the maximum frequency of the second motor.
			9999	The maximum frequency of an MM-EFS/MM-THE4 motor when MM-EFS/MM-THE4 is selected. The setting value of **Pr.457** is used for non-MM-EFS/MM-THE4 motors.

Pr.	Name	Initial value	Setting range	Description
744 C207	Second motor inertia (integer)	9999	10 to 999, 9999	Set the inertia of the second motor. 9999: Uses MM-EFS/MM-THE4 inertia for IPM motor MM-EFS/MM-THE4.
745 C208	Second motor inertia (exponent)	9999	0 to 7, 9999	
463 C210	Second motor auto tuning setting/status	0	0, 101	No auto tuning for the second motor.
			1	Performs offline auto tuning without rotating the second motor. (motor other than the IPM motor MM-EFS/MM-THE4)
			11	Performs offline auto tuning without rotating the motor (for IPM motor MM-EFS/MM-THE4).
458 C220	Second motor constant (R1)	9999	0 to 50 Ω, 9999*1*4	Tuning data of the second motor (The value measured by offline auto tuning is automatically set.) 9999: Uses the MM-EFS/MM-THE4 constant for the IPM motor MM-EFS/MM-THE4, and the inverter internal data for a PM motor other than MM-EFS/MM-THE4.
			0 to 400 mΩ, 9999*2*4	
460 C222	Second motor constant (L1) / d-axis inductance (Ld)	9999	0 to 500 mH, 9999*1*4	
			0 to 50 mH, 9999*2*4	
461 C223	Second motor constant (L2) / q-axis inductance (Lq)	9999	0 to 500 mH, 9999*1*4	
			0 to 50 mH, 9999*2*4	
860 C226	Second motor torque current/Rated PM motor current	9999	0 to 500 A, 9999*1*4	
			0 to 3600 A, 9999*2*4	
738 C230	Second motor induced voltage constant (phi f)	9999	0 to 5000 mV/(rad/s)*4	Set this parameter according to the PM motor specifications.
			9999	Value calculated based on the tuning data.
739 C231	Second motor Ld decay ratio	9999	0 to 100%, 9999	Tuning data of the second motor. (The value measured by offline auto 9999: Uses the MM-EFS/MM-THE4 constant for the IPM motor MM-EFS/MM-THE4, and the inverter internal data for a PM motor other than MM-EFS/MM-THE4.
740 C232	Second motor Lq decay ratio	9999	0 to 100%, 9999	
741 C282	Second starting resistance tuning compensation	9999	0 to 200%, 9999	
742 C285	Second motor magnetic pole detection pulse width	9999	0 to 6000 μs, 10000 to 16000 μs, 9999	
746 C233	Second motor protection current level	9999	100 to 500%	Set the maximum current (OCT) level of the second motor.
			9999	Uses the MM-EFS/MM-THE4 constant for the IPM motor MM-EFS/MM-THE4, and 200% for a PM motor other than MM-EFS/MM-THE4.

*1 For the FR-F820-02330(55K) or lower and FR-F840-01160(55K) or lower.
*2 For the FR-F820-03160(75K) or higher and FR-F840-01800(75K) or higher.
*3 Differs according to the voltage class. (200 V/400 V)
*4 The setting range and unit change according to the **Pr.71** (**Pr.450**) setting.

POINT

- The settings are valid under the PM motor control.
- The offline auto tuning enables the operation with SPM motors and IPM motors other than MM-EFS/MM-THE4. (When a PM motor other than the IPM motor MM-EFS/MM-THE4 is used, always perform the offline auto tuning.)
- Tuning is enabled even when a load is connected to the motor.
- Reading/writing of the motor constants tuned by offline auto tuning are enabled. The offline auto tuning data (motor constants) can be copied to another inverter with the operation panel.
- The offline auto tuning status can be monitored with the operation panel and the parameter unit.

◆Before performing offline auto tuning

Check the following points before performing offline auto tuning.

- The PM motor control is selected.
- A motor is connected. Note that the motor should be at a stop at a tuning start. (The motor should not be rotated by the force applied from outside during the tuning.)
- For the motor capacity, the rated motor current should be equal to or less than the rated inverter current. (It must be 0.4 kW or higher.) If a motor with substantially low rated current compared with the rated inverter current is used, speed and torque accuracies may deteriorate due to torque ripples, etc. Set the rated motor current to about 40% or higher of the rated inverter current.
- The maximum frequency under PM motor control is 400 Hz.
- The motor may rotate slightly even if the offline auto tuning without motor rotation (**Pr.96 Auto tuning setting/status** = "1 or 11") is selected. (It does not affect the tuning performance.) Fix the motor securely with a mechanical brake, or before tuning, make sure that it is safe even if the motor rotates. (Caution is required especially in vertical lift applications.)
- Offline auto tuning is not performed correctly when the surge voltage suppression filter (FR-ASF-H/FR-BMF-H) are inserted between the inverter and motor. Be sure to remove them before performing tuning.

◆Setting

- To perform tuning, set the following parameters about the motor.

First motor Pr.	Second motor Pr.	Name	Setting for a PM motor other than MM-EFS/MM-THE4	Setting for MM-EFS/MM-THE4
80	453	Motor capacity	Motor capacity (kW)	Set by the IPM parameter initialization (Refer to page 150.)
81	454	Number of motor poles	The number of motor poles (2 to 12)	
9	51	Electronic thermal O/L relay	Rated motor current (A)	
84	457	Rated motor frequency	Rated motor frequency (Hz)	
83	456	Rated motor voltage	Rated motor voltage (V)	Rated motor voltage (V) written on the motor's rating plate
71	450	Applied motor	8090, 8093 (IPM motor) 9090, 9093 (SPM motor)*1	210 and 213*1
96	463	Auto tuning setting/status	1	11

*1 Set **Pr.71 Applied motor** according to the motor to be used. According to the **Pr.71** setting, the range of the motor constant parameter setting values and units can be changed. (For other setting values of **Pr.71**, refer to page 337.)

Motor		Pr.71 setting	
		Motor constant parameter Ω, mH and A unit setting	Motor constant parameter Internal data setting
IPM motor	MM-EFS/MM-THE4	210	213 (214)
	Other than MM-EFS/MM-THE4	8090	8093 (8094)
SPM motor		9090	9093 (9094)

NOTE

- If PM motor control is performed, tuning cannot be performed even when **Pr.96** = "101" is set. If MM-EFS/MM-THE4 is set to the applied motor, tuning cannot be performed even when **Pr.96** = "1, 101" is set.

- For the tuning accuracy improvement, set the following parameter when the motor constant is known in advance.

First motor Pr.	Second motor Pr.	Name	Setting for a PM motor other than MM-EFS/MM-THE4	Setting for MM-EFS/MM-THE4
702	743	Maximum motor frequency	The maximum motor frequency (Hz)	9999 (initial value)
707	744	Motor inertia (integer)	Motor inertia*1 Jm=**Pr.707** × 10^(**- Pr.724**) (kg/m^2)	9999 (initial value)
724	745	Motor inertia (exponent)		
725	746	Motor protection current level	Maximum current level of the motor (%)	9999 (initial value)

*1 The setting is valid only when both of the **Pr.707** (**Pr.744**) and **Pr.724** (**Pr.745**) settings are other than "9999".

◆Performing tuning

POINT

- Before performing tuning, check the monitor display of the operation panel or the parameter unit if the inverter is in the state ready for tuning. Turning ON the start command while tuning is unavailable starts the motor.

- In the PU operation mode, press FWD / REV on the operation panel.

  For External operation, turn ON the start command (STF signal or STR signal). Tuning will start.

NOTE

- Satisfy the required inverter start conditions to start offline auto tuning. For example, stop the input of MRS signal.
- To force tuning to end, use the MRS or RES signal or press STOP RESET on the operation panel. (Turning the start signal (STF signal or STR signal) OFF also ends tuning.)
- During offline auto tuning, only the following I/O signals are valid (initial value)
  Input terminals <effective signals>: STP (STOP), OH, MRS, RT, RES, STF, STR, S1 and S2
  Output terminals: RUN, OL, IPF, FM/CA, AM, A1B1C1 and SO
- When the rotation speed and the output frequency are selected for terminals FM/CA and AM, the progress status of offline auto tuning is output in fifteen steps from FM/CA and AM.
- Do not perform ON/OFF switching of the Second function selection(RT) signal during offline auto tuning. Auto tuning will not be performed properly.
- A motor with 14 or more poles cannot be tuned.
- Since the Inverter running (RUN) signal turns ON when tuning is started, pay close attention especially when a sequence which releases a mechanical brake by the RUN signal has been designed.
- When executing offline auto tuning, input the run command after switching ON the main circuit power (R/L1, S/L2, T/L3) of the inverter.
- While **Pr.79 Operation mode selection** = "7", turn the PU operation external interlock (X12) signal ON to tune in the PU operation mode.

- Monitor is displayed on the operation panel (FR-DU08) and the parameter unit (FR-PU07) during tuning as below.

Pr.96 (Pr.463) Setting	1	11	1	11
	Parameter unit (FR-PU07) display		Operation panel (FR-DU08) display	
(1) Setting	READ:List 1 --- STOP PU	READ:List 11 --- STOP PU	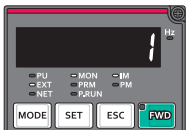	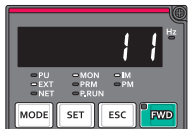
(2) During tuning	TUNE 2 STF FWD PU	TUNE 12 STF FWD PU	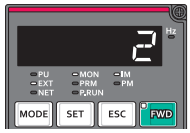	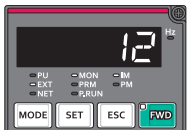
(3) Normal completion	TUNE 3 COMPLETION STF STOP PU	TUNE 13 COMPETION STF STOP PU	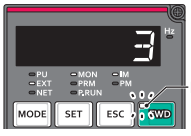 Flickering	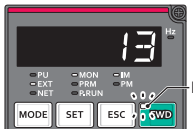 Flickering
(4) Forced end	TUNE 8 ERROR --- STOP PU		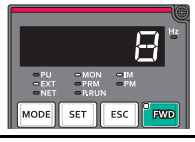	

(C) Motor constant parameters

- When offline auto tuning ends, press STOP RESET on the operation panel during PU operation. For External operation, turn OFF the start signal (STF signal or STR signal).
  This operation resets the offline auto tuning, and the PU's monitor display returns to the normal indication.
  (Without this operation, next operation cannot be started.)

NOTE

- The motor constants measured once in the offline auto tuning are stored as parameters and their data are held until the offline auto tuning is performed again. However, the tuning data is cleared by performing all parameter clear.
- Changing **Pr.71** after tuning completion will change the motor constant. For example, if **Pr.71** = "8093" is set after tuning is performed with **Pr.71** ="8090", the tuning data becomes invalid. Set **Pr.71** = "8090" again for using the tuning data.

- If offline auto tuning has ended in error (see the table below), motor constants are not set.
  Perform an inverter reset and restart tuning.

Error display	Error cause	Countermeasures
8	Forced end	Set **Pr.96 (Pr.463)** = "1" or "11" and try again.
9	Inverter protective function operation	Make the setting again.
92	The converter output voltage has dropped to 75% of the rated voltage.	Check for the power supply voltage fluctuation. Check the **Pr.84 Rated motor frequency** setting.
93	Calculation error. The motor is not connected.	Check the motor wiring and make the setting again.
94	Rotation tuning frequency setting error (The frequency command for the tuning was given to exceed the maximum frequency setting, or to be in the frequency jump range.)	Check the **Pr.1 Maximum frequency** and **Pr.31** to **Pr.36** Frequency jump settings.

- When tuning is ended forcibly by pressing STOP RESET or turning OFF the start signal (STF or STR) during tuning, offline auto tuning does not end properly. (The motor constants have not been set.)
  Perform an inverter reset and restart tuning.

NOTE

- An instantaneous power failure occurring during tuning will result in a tuning error.
  After power is restored, the inverter starts normal operation. Therefore, when STF (STR) signal is ON, the motor runs in the forward (reverse) rotation.
- Any alarm occurring during tuning is handled as in the normal operation. However, if the retry function is set, no retry is performed even when a protective function that performs a retry is activated.
- The set frequency monitor displayed during the offline auto tuning is 0 Hz.

Caution

- **Note that the motor may start running suddenly.**

◆Parameters in which the tuning results are set to after tuning

First motor Pr.	Second motor Pr.	Name	Other than MM-EFS/MM-THE4 Pr.96 (Pr.463) = 1	V/F control or MM-EFS/MM-THE4 Pr.96 (Pr.463) = 11	Description
90	458	Motor constant (R1)	○	○	Resistance per phase
92	460	Motor constant (L1)/d-axis inductance (Ld)	○	—	d-shaft inductance
93	461	Motor constant (L2)/q-axis inductance (Lq)	○	—	q-shaft inductance
711	739	Motor Ld decay ratio	○	—	d-shaft inductance decay ratio
712	740	Motor Lq decay ratio	○	—	q-shaft inductance decay ratio
717	741	Starting resistance tuning compensation	○	○	
721	742	Starting magnetic pole position detection pulse width	○	—	When the setting value is 10000 or more: With polarity inversion for compensation, voltage pulse (Pr. setting minus 10000) μs
859	860	Torque current/Rated PM motor current	○	—	
96	463	Auto tuning setting/status	○	○	

◆Tuning adjustment (Pr.1002)

- The overcurrent protective function may be activated during Lq tuning for an easily magnetically saturated motor (motor with a large Lg decay ratio). In such case, adjust the target flowing current used for tuning with **Pr.1002 Lq tuning target current adjustment coefficient**.

◆Changing the motor constants

- If the motor constants are known, the motor constants can be set directly or set using data measured through offline auto tuning.
- According to the **Pr.71 (Pr.450)** setting, the range of the motor constant parameter setting values and units can be changed. The setting values are stored in the EEPROM as motor constant parameters, and two types of motor constants can be stored.

◆Changing the motor constants (If setting motor constants in units of [Ω], [mH] or [A])

- Set **Pr.71** as shown below.

Motor		Pr.71 setting
IPM motor	MM-EFS/MM-THE4	210
	Other than MM-EFS/MM-THE4	8090
SPM motor		9090

- Set given values as the motor constant parameters.

First Pr.	Second Pr.	Name	Setting range	Setting increments	Initial value
90	458	Motor constant (R1)	0 to 50 Ω, 9999*1	0.001 Ω*1	9999
			0 to 400 mΩ, 9999*2	0.01 mΩ*2	
92	460	Motor constant (L1)/d-axis inductance (Ld)	0 to 500 mH, 9999*1	0.01 mH*1	
			0 to 50 mH, 9999*2	0.001 mH*2	
93	461	Motor constant (L2)/q-axis inductance (Lq)	0 to 500 mH, 9999*1	0.01 mH*1	
			0 to 50 mH, 9999*2	0.001 mH*2	
706	738	Induced voltage constant (phi f)	0 to 5000 mV/(rad/s), 9999	0.1 mV/(rad/s)	
859	860	Torque current/Rated PM motor current	0 to 500 A, 9999*1	0.01 A*1	
			0 to 3600 A, 9999*2	0.1 A*2	

*1 For the FR-F820-02330(55K) or lower and FR-F840-01160(55K)or lower.
*2 For the FR-F820-03160(75K) or higher and FR-F840-01800(75K)or higher.

NOTE

- Setting "9999" disables the tuning data. The MM-EFS/MM-THE4 constant is used for the IPM motor MM-EFS/MM-THE4, and the inverter internal constant is used for a PM motor other than MM-EFS/MM-THE4.

◆Changing the motor constants (If setting a motor constants in the internal data of the inverter)

- Set **Pr.71** as follows.

Motor		Pr.71 setting
IPM motor	MM-EFS/MM-THE4	213 (214)
	Other than MM-EFS/MM-THE4	8093 (8094)
SPM motor		9093 (9094)

- Set given values as the motor constant parameters. The displayed increments of the read motor constants can be changed with **Pr.684 Tuning data unit switchover**.

First motor Pr.	Second motor Pr.	Name	Pr.684 = 0 (initial value)		Pr.684 = 1		Initial value
			Setting range	Setting increments	Range indication	Unit indication	
90	458	Motor constant (R1)	0 to ***, 9999	1	0 to 50 Ω, 9999*1	0.001 Ω*1	9999
					0 to 400 mΩ, 9999*2	0.01 mΩ*2	
92	460	Motor constant (L1)/d-axis inductance (Ld)			0 to 500 mH, 9999*1	0.01 mH*1	
					0 to 50 mH, 9999*2	0.001 mH*2	
93	461	Motor constant (L2)/q-axis inductance (Lq)			0 to 500 mH, 9999*1	0.01 mH*1	
					0 to 50 mH, 9999*2	0.001 mH*2	
706	738	Induced voltage constant (phi f)			0 to 5000 mV/s/rad, 9999	0.1 mV/(rad/s)	
859	860	Torque current/Rated PM motor current			0 to 500 A, 9999*1	0.01 A*1	
					0 to 3600 A, 9999*2	0.1 A*2	

*1 For the FR-F820-02330(55K) or lower and FR-F840-01160(55K) or lower.
*2 For the FR-F820-03160(75K) or higher and FR-F840-01800(75K) or higher.

NOTE

- As the motor constants measured in the offline auto tuning have been converted into internal data (****), refer to the following setting example when making setting:
- Setting example: To slightly increase **Pr.90** value (5%)
  If **Pr.90** = "2516" is displayed
  The value can be calculated with "2516 × 1.05 = 2641.8". Therefore set **Pr.90** = "2642".
  (The value displayed has been converted into a value for internal use. Hence, simple addition of a given value to the displayed value has no significance)
- Setting "9999" disables the tuning data. The MM-EFS/MM-THE4 constant is used for the IPM motor MM-EFS/MM-THE4, and the inverter internal constant is used for a PM motor other than MM-EFS/MM-THE4.

Parameters referred to

Pr.9 Electronic thermal O/L relay page 225
Pr.71 Applied motor page 337
Pr.178 to Pr.189 (input terminal function selection) page 329

5.10.4 Online auto tuning Magnetic flux

If online auto tuning is selected under Advanced magnetic flux vector control, favorable torque accuracy is retained by adjusting temperature even when the resistance value varies due to increase in the motor temperature.

Pr.	Name	Initial value	Setting range	Description
95 **C111**	**Online auto tuning selection**	0	0	Do not perform online auto tuning
			1	Perform online auto tuning at startup
574 **C211**	**Second motor online auto tuning**	0	0 and 1	Select online auto tuning for the second motor. (same as **Pr.95**)

◆Performing online auto tuning at startup (setting value "1")

- By promptly tuning the motor status at startup, accurate operation without being affected by motor temperature is achieved. Also high torque can be provided at very low speed and stable operation is possible.
- When using Advanced magnetic flux vector control (**Pr.80 Motor capacity, Pr.81 Number of motor poles**), select the online auto tuning at start.
- Make sure to perform offline auto tuning before performing online auto tuning.
- Operation method

  1) Perform offline auto tuning. (Refer to page 341.)

  2) Check that **Pr.96 Auto tuning setting/status** = "3 or 103 (offline auto tuning completion)".

  3) Set **Pr.95 Online auto tuning selection** = "1 (online auto tuning at start)".

  4) Check that the following parameters are set before starting operation.

Pr.	Description
9	Uses both rated motor current and electronic thermal O/L relay.
71	Applicable motor
80	Motor capacity (with the rated motor current equal to or lower than the rated inverter current)*1
81	Number of motor poles

*1 If a motor with substantially low rated current compared with the rated inverter current is used, speed and torque accuracies may deteriorate due to torque ripples, etc. Set the rated motor current to about 40% or higher of the rated inverter current.

5) In the PU operation mode, press FWD / REV on the operation panel.

For External operation, turn ON the start command (STF signal or STR signal).

NOTE

- When performing the online auto tuning at start for a lift, consider utilization of tuning using the external terminal. The tuning is completed in approximately 500 ms at the maximum after the start. Not enough torque may be provided during that period. Caution is required to prevent the object from dropping. Use of the start-time tuning start (X28) signal is recommended to perform tuning. (Refer to page 360.)
- Perform online auto tuning at startup when the motor is stopped.
- The online auto tuning is disabled when the MRS signal is being input, the setting speed is **Pr.13 Starting frequency** or lower (V/F control, Advanced magnetic flux vector control), an inverter fault is occurring, or the inverter's startup condition is not satisfied.
- Online auto tuning does not operate during deceleration and restart from DC injection brake operation.
- It is disabled during JOG operation.
- If automatic restart after instantaneous power failure is selected, automatic restart is prioritized. (Online auto tuning at startup does not run during frequency search.)
  If automatic restart after instantaneous power failure is used together, perform online auto tuning while stopping operation with the X28 signal. (Refer to page 360.)
- Zero current detection and output current detection are enabled during online auto tuning.
- No RUN signal is output during online auto tuning. The RUN signal is turned ON at operation startup.
- If the time between the inverter stop and restart is within 4 s, tuning is performed at startup but its result will not not applied.

◆Online auto tuning at startup using the external terminal (setting value "1", X28 signal and Y39 signal)

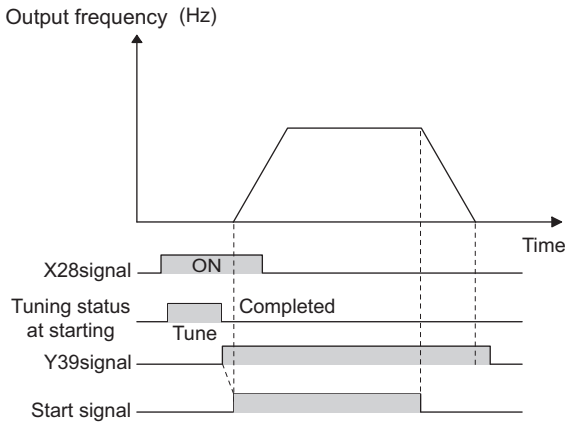

- Before turning ON the start signal (STF or STR), online auto tuning can be performed by turning ON the Start-time tuning start external input (X28) signal in a stopped status. Such operation will minimize the startup delay by turning at start.
- Perform offline auto tuning and set **Pr.95** = "1" (tuning at start).
- When Start time tuning completion (Y39) is OFF, tuning at start can be performed with X28 signal.
- Up to 500 ms can be taken to complete tuning at startup.
- To use the X28 signal, set "28" in any of **Pr.178 to Pr.189 (Input terminal function selection)** to assign the function to an input terminal.
- To use the Y39 signal, set "39 (positive logic) or 139 (negative logic)" in any of **Pr.190 to Pr.196 (output terminal function selection)** to assign function to an output terminal.

While the motor is stopped

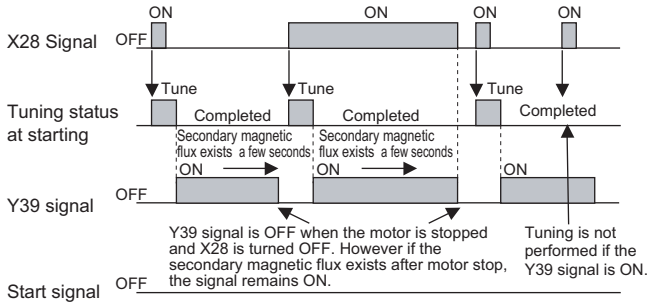

While the X28 signal is OFF

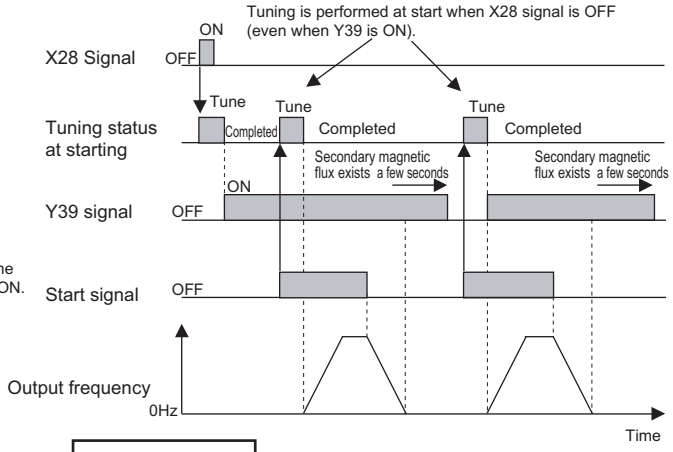

While the X28 signal is ON

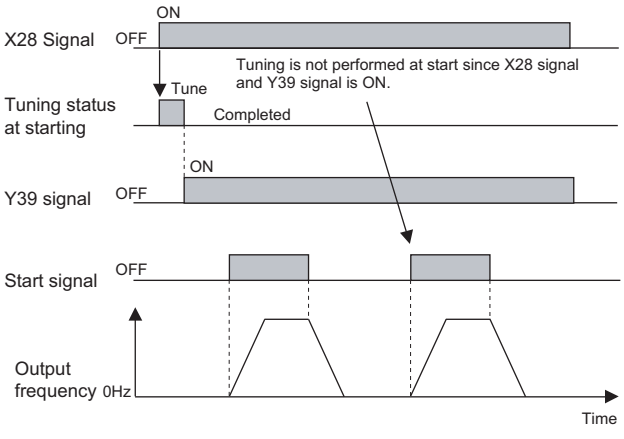

Switching motor

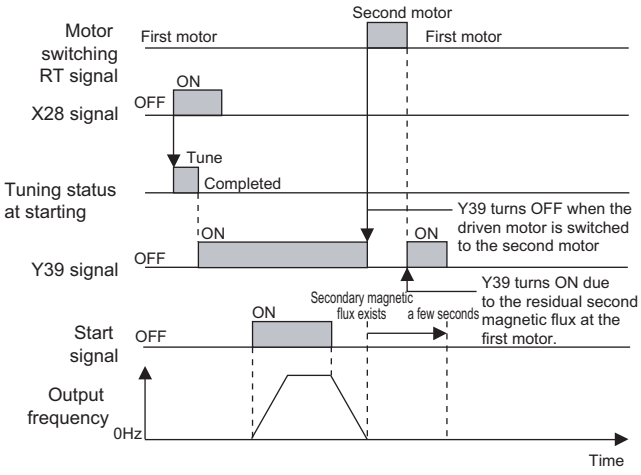

NOTE

- The Y39 signal remains ON as long as there is second flux even after the motor is stopped.
- The X28 signal is disabled while the Y39 signal is ON.
- The STF and STR signals are enabled after completing tuning at start.
- The Inverter running (RUN) signal is not turned ON during online auto tuning. The RUN signal is turned ON after starting up.
- It is disabled during V/F control or PM motor control.
- Changing the terminal assignment using **Pr.178 to Pr.189 (input terminal function selection) and Pr.190 to Pr.196 (output terminal function selection)** may affect other functions. Set parameters after confirming the function of each terminal.

◆Tuning the second applied motor (Pr.574)

- When switching two different motors by one inverter, set the second motor in **Pr.450 Second applied motor**. (In the initial setting, no second motor is applied. (Refer to page 337.))

  Pr.574 is enabled when the Second function selection (RT) signal is turned ON.

Pr.	Description
450	Applicable motor
453	Motor capacity (with the rated motor current equal to or lower than the rated inverter current)*1
454	Number of motor poles

*1 If a motor with substantially low rated current compared with the rated inverter current is used, speed and torque accuracies may deteriorate due to torque ripples, etc. Set the rated motor current to about 40% or higher of the rated inverter current.

NOTE

- The RT signal is a second function selection signal. The RT signal also enables other second functions. (Refer to page 329.) The RT signal is assigned to the terminal RT in the initial status. Set "3" in any of **Pr.178 to Pr.189** (input terminal function selection) to assign the RT signal to another terminal.
- Changing the terminal assignment using **Pr.178 to Pr.189 (input terminal function selection)** may affect the other functions. Set parameters after confirming the function of each terminal.

Parameters referred to

Pr.9 Electronic thermal O/L relay page 225
Pr.71 Applied motor page 337
Pr.80 Motor capacity page 143, page 341, page 351
Pr.81 Number of motor poles page 143, page 341, page 351
Pr.96 Auto tuning setting/status page 341, page 351
Pr.178 to Pr.189 (input terminal function selection) page 329
Pr.190 to Pr.196 (output terminal function selection) page 288

5.11 (A) Application parameters

Purpose	Parameter to set			Refer to page
To operate by switching between the inverter and the commercial power supply operation	Electronic bypass function	P.A000 to P.A005	Pr.135 to Pr.139, Pr.159	363
To reduce the standby power	Self power management	P.A002, P.A006, P.A007, P.E300	Pr.30, Pr.137, Pr.248, Pr.254	370
To strengthen or weaken the frequency at a constant cycle	Traverse operation	P.A300 to P.A305	Pr.592 to Pr.597	373
To remove stains on the impellers or fans of pumps by repeating a forward/reverse rotation	Cleaning function	P.A420 to P.A430	Pr.1469 to Pr.1479	375
To perform process control, such as for the pump flow volume and air volume	Multi-pump function (Advanced PID function)	P.A400 to P.A413	Pr.578 to Pr.591	406
	PID control	P.A600 to P.A607, P.A610 to P.A615, P.A621 to P.A625, P.A640 to P.A644, P.A650 to P.A655, P.A661 to P.A665, P.A683 to P.A689	Pr.127 to Pr.134, Pr.553, Pr.554, Pr.575 to Pr.577, Pr.609, Pr.610, Pr.753 to Pr.758, Pr.1015, Pr.1134, Pr.1135, Pr.1140, Pr.1141, Pr.1143 to Pr.1149, Pr.1460 to Pr.1466	378
	PID pre-charge function	P.A616 to P.A620, P.A626, P.A656 to P.A660, P.A666	Pr.760 to Pr.769, Pr.1132, Pr.1133	402
	PID display adjustment	P.A630 to P.A633, P.A670 to P.A673	C42 to C45 (Pr.934, Pr.935), Pr.1136 to Pr.1139	399
To continue operating at analog current input loss	4 mA input check	P.A680 to P.A682	Pr.573, Pr.777, Pr.778	325
To restart without stopping the motor at instantaneous power failure	Automatic restart after instantaneous power failure / flying start function for induction motors	P.A700 to P.A705, P.A710, P.F003	Pr.57, Pr.58, Pr.162 to Pr.165, Pr.299, Pr.611	414
	Frequency search accuracy improvement (V/F control, offline auto tuning)	P.A700, P.A711, P.A712, P.C110, P.C210	Pr.96, Pr.162, Pr.298, Pr.463, Pr.560	422
	Automatic restart after instantaneous power failure / flying start function for IPM motors	P.A700, P.A702, P.F003, P.F004	Pr.57, Pr.162, Pr.611	420
To decelerate the motor to a stop at instantaneous power failure	Power failure time deceleration-to-stop function	P.A730 to P.A735, P.A785	Pr.261 to Pr.266, Pr.294	426
To operate with sequence program	PLC function	P.A800 to P.A804, P.A811 to P.A860	Pr.414 to Pr.417, Pr.498, Pr.1150 to Pr.1199	431
To store the inverter running status to a USB memory device	Trace function	P.A900 to P.A906, P.A910 to P.A920, P.A930 to P.A939	Pr.1020 to Pr.1047	433

5.11.1 Electronic bypass function V/F Magnetic flux

The inverter contains complicated sequence circuits for switching between the commercial power supply operation and inverter operation. Therefore, interlock operation of the magnetic contactor for switching can be easily performed by simply inputting start, stop, and automatic switching selection signals.

Pr.	Name	Initial value	Setting range	Description
57 A702	Restart coasting time	9999	0	Coasting time differs according to the inverter capacity.*1
			0.1 to 30 s	Set the waiting time for the inverter to perform a restart at power restoration after an instantaneous power failure.
			9999	No restart
58 A703	Restart cushion time	1 s	0 to 60 s	Set the voltage cushion time for restart.
135 A000	Electronic bypass sequence selection	0	0	Without electronic bypass sequence
			1	With electronic bypass sequence
136 A001	MC switchover interlock time	1 s	0 to 100 s	Set the operation interlock time for MC2 and MC3.
137 A002	Start waiting time	0.5 s	0 to 100 s	Set a time period that is a little longer than the time period from the ON signal input to the actual pick-up operation of MC3 (0.3 to 0.5 s).
138 A003	Bypass selection at a fault	0	0	Inverter output stop (motor coasting) at inverter failure
			1	Automatic switchover to commercial power supply operation at inverter failure. (Switchover is not possible when an external thermal relay (E.OHT) or CPU fault (E.CPU) is occurring.)
139 A004	Automatic switchover frequency from inverter to bypass operation	9999	0 to 60 Hz	Set the frequency where the inverter operation is switched to commercial power supply operation. The inverter operation is performed from a start to **Pr.139** setting, then it switches automatically to the commercial power supply operation when the output frequency is equal to or above **Pr.139**.
			9999	Without automatic switchover
159 A005	Automatic switchover frequency range from bypass to inverter operation	9999	0 to 10 Hz	Set the frequency where the commercial power supply operation, which has been switched from the inverter operation with **Pr.139**, switches back to inverter operation. When the frequency command becomes less than (**Pr.139** - **Pr.159**), the motor switches automatically to inverter operation and operates at the frequency of the frequency command. Turning OFF the inverter start command (STF/STR) also switches the operation to the inverter operation.
			9999	To switch the commercial power supply operation, which has been switched from the inverter operation with **Pr.139**, to the inverter operation again, the inverter start command (STF/STR) is turned OFF. The operation switches to the inverter operation, and the motor decelerates to a stop.

*1 The coasting time when **Pr.57** = "0" is as shown below. (When **Pr.162 Automatic restart after instantaneous power failure selection** is set to the initial value.)
FR-F820-00077(1.5K) or lower and FR-F840-00038(1.5K) or lower: 0.5 s
FR-F820-00105(2.2K) to FR-F820-00340(7.5K) and FR-F840-00052(2.2K) to FR-F840-00170(7.5K): 1 s
FR-F820-00490(11K) to FR-F820-02330(55K) and FR-F840-00250(11K) to FR-F840-01160(55K): 3.0 s
FR-F820-03160(75K) or higher and FR-F840-01800(75K) or higher: 5.0 s

◆Electronic bypass sequence function

- When operating the motor at 60 Hz (or 50 Hz), the motor can be more efficiently operated with a commercial power supply. In addition, if the motor cannot be stopped for a long period of time even for an inverter maintenance and inspection, it is recommended that a commercial power supply circuit be installed.
- When switching between inverter operation and commercial power supply operation, commercial power supply may be accidentally applied to the output side of the inverter. To avoid such situation, provide an interlock where the magnetic contactor at the commercial power supply side turns ON at turn OFF of the magnetic contactor at the inverter output side. The inverter's electronic bypass sequence that outputs timing signals for the magnetic contactors can act as a complicated interlock between the commercial power supply operation and the inverter operation.

◆Connection diagram

• A tipical connection diagram of the electronic bypass sequence is shown below.

- Sink logic, **Pr.185** = "7", **Pr.186** = "6", **Pr.192** = "17", **Pr.193** = "18", and **Pr.194** = "19"

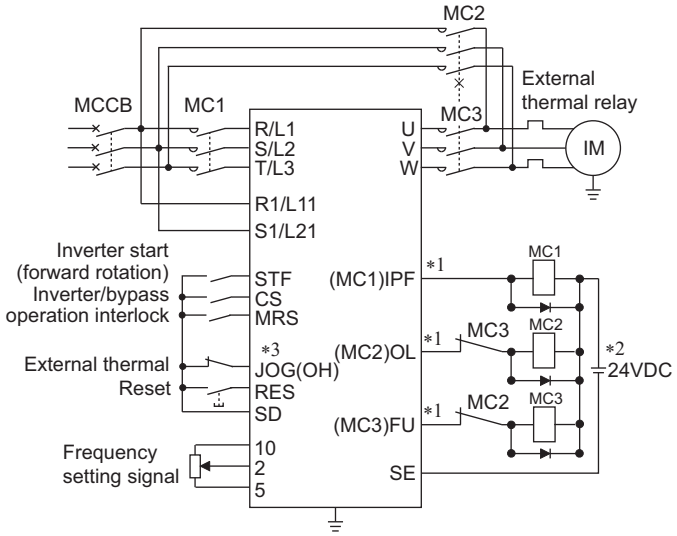

Standard models

- Sink logic, **Pr.182** = "24", **Pr.183** = "95", **Pr.184** = "96", **Pr.185** = "7", **Pr.192** = "17", **Pr.193** = "18", **Pr.194** = "19"

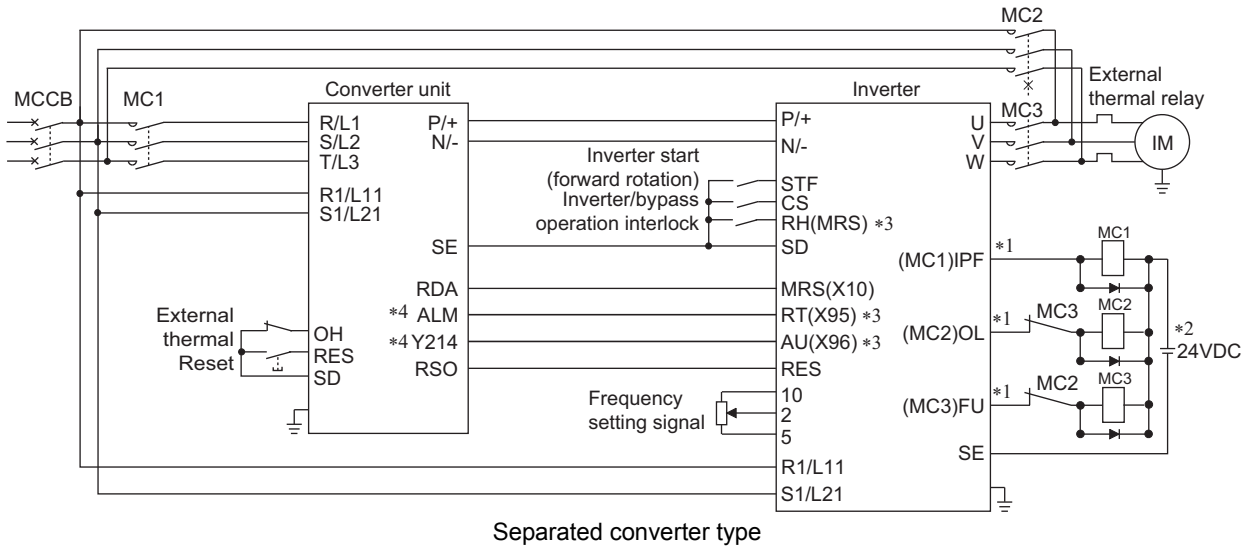

Separated converter type

*1 Be careful of the capacity of the sequence output terminals.
The applied terminals differ by the settings of **Pr.190 to Pr.196 (output terminal function selection)**.

Output terminal capacity	Output terminal permissible load
Open collector output of inverter (RUN, SU, IPF, OL, FU)	24 VDC 0.1 A
Inverter relay output (A1-C1, B1-C1, A2-B2, B2-C2) Relay output option (FR-A8AR)	230 VAC 0.3 A 30 VDC 0.3 A

*2 When connecting a DC power supply, insert a protective diode.
When connecting an AC power supply, use the relay output option (FR-A8AR) and use contact outputs.

*3 The applied terminals differ by the settings of **Pr.180 to Pr.189 (input terminal function selection)**.

*4 To use the signal, assign the function to the output terminal **Pr.190 to Pr.195 (output terminal function selection)** of the converter unit. Always set the negative logic for the ALM signal.

NOTE

• Use the electronic bypass function in External operation mode. In addition, the wiring terminals R1/L11 and S1/L21 must be connected to a separate power source that does go through MC1. Be sure to connect using a separate power supply.

• Be sure to provide a mechanical interlock for MC2 and MC3.

• Operation of magnetic contactor (MC1, MC2, MC3)

Magnetic contactor	Installation location	Operation		
		During commercial power supply operation	During inverter operation	During inverter fault
MC1	Between power supply and inverter input side	Shorted	Shorted	Open (short by reset)
MC2	Between power supply and motor	Shorted	Open	Open (Selected by **Pr.138**. Always open when the external thermal relay is operating.)
MC3	Between inverter output side and motor	Open	Shorted	Open

• The input signals are as shown below.

Signal	Applied terminal	Function	Operation	MC operation*8		
				MC1*6	MC2	MC3
MRS	MRS*1	Selects whether or not operation is available.*2	ON Electronic bypass operation available	○	-	-
			OFF Electronic bypass operation not available	○	×	Invariance
CS	CS	Inverter/commercial power supply operation switchover*3	ON Inverter operation	○	×	○
			OFF Commercial power supply operation	○	○	×
STF (STR)	STF (STR)	Inverter operation command (Disabled during commercial power supply operation)*4	ON Forward rotation (reverse rotation)	○	×	○
			OFF Stop	○	×	○
OH	Set one of **Pr.180 to Pr.189** to "7".	External thermal relay input	ON Motor normal	○	-	-
			OFF Motor fault	×	×	×
RES	RES	Operation status reset*5	ON Reset	Invariance	×	Invariance
			OFF Normal operation	○	-	-
X95/X96	Set "95" and "96" in any of **Pr.180 to Pr.189**.	Converter unit fault / Converter unit fault (E.CPU, E.OHT)	X95 signal OFF, X96 signal OFF Converter fault (E.OHT, E.CPU)	×	×	×
			X95 signal ON, X96 signal ON Converter normal	○	-	-
			X95 signal OFF, X96 signal ON Converter fault (other than E.OHT or E.CPU)	×	- *7	×

*1 For separated converter types, the X10 signal is assigned to the terminal MRS in the initial setting. For the MRS signal, set "24" to any of **Pr.180 to Pr.189 (input terminal function selection)** to assign the function to another terminal.

*2 When the MRS signal is OFF, neither the commercial power supply operation nor the inverter operation can be performed.

*3 Terminal CS is initially set to "no function". To enable CS signal, set "6" in **Pr.186 CS terminal function selection** to assign the function to a terminal. The CS signal operates only when the MRS signal is ON.

*4 STF(STR) operates only when the MRS and CS signals are both ON.

*5 The RES signal can be used for reset input acceptance with **Pr.75 Reset selection/disconnected PU detection/PU stop selection**. When RES signal and another input signal are simultaneously input, the MC operation by the RES signal has a higher priority.

*6 MC1 turns OFF at an inverter fault.

*7 When **Pr.138**="0 (electronic bypass invalid at a fault)", MC2 is OFF. When **Pr.138**="1 (electronic bypass valid at a fault)", MC2 is ON.

*8 MC operation
○: MC-ON
×: MC-OFF
-: During inverter operation, MC2-OFF, MC3-ON
During commercial power supply operation, MC2-ON, MC3-OFF
Invariance: The status before changing the signal ON or OFF is held.

(A) Application parameters

- The output signals are as shown below.

Signal	Applied terminal (Pr.190 to Pr.196 setting)	Description
MC1	17	Operation output signal of the magnetic contactor MC1 on the inverter's input side.
MC2	18	Operation output signal of the magnetic contactor MC2 for the commercial power supply operation.
MC3	19	Operation output signal of the magnetic contactor MC3 on the inverter's output side.

◆Electronic bypass operation sequence

- Example of operation sequence without automatic bypass sequence (**Pr.139** = "9999")

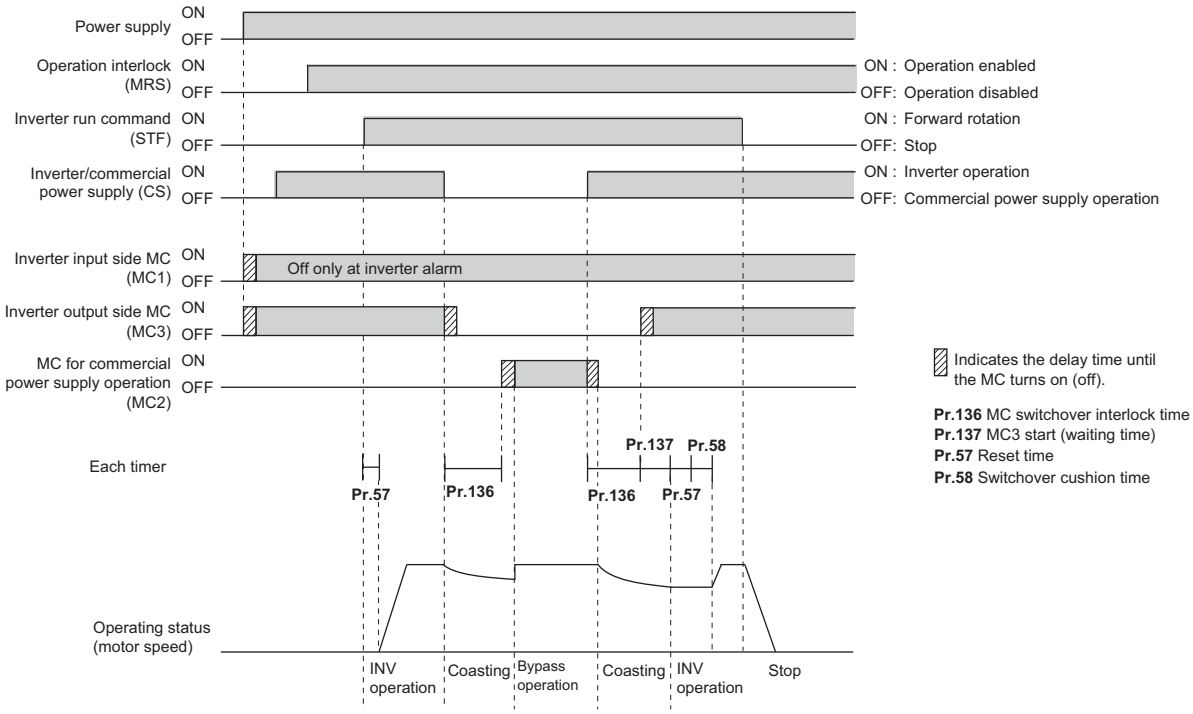

- Example of operation sequence with automatic bypass sequence (**Pr.139** ≠ "9999", **Pr.159** = "9999")

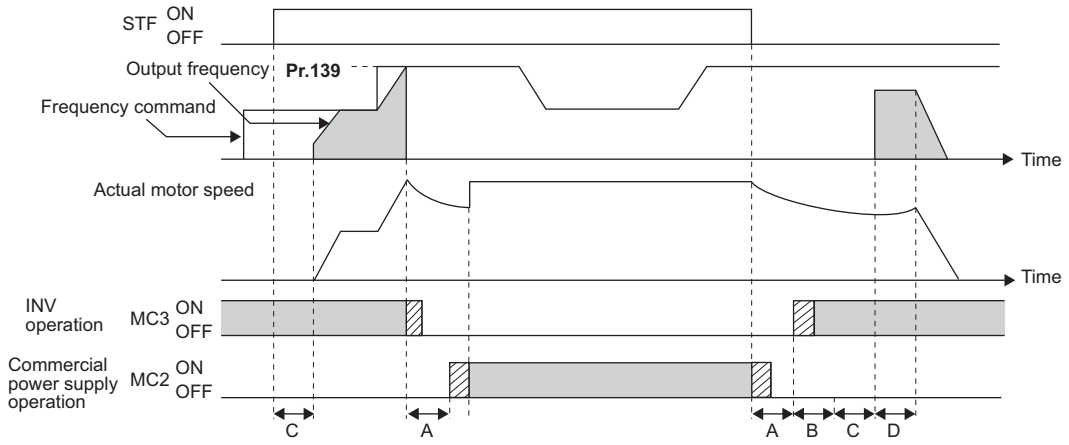

A : **Pr.136 MC switchover interlock time**
B : **Pr.137 Start waiting time**
C : **Pr.57 Restart coasting time**
D : **Pr.58 Restart cushion time**

• Example of operation sequence with automatic bypass sequence (**Pr.139** ≠ "9999", **Pr.159** ≠ "9999")

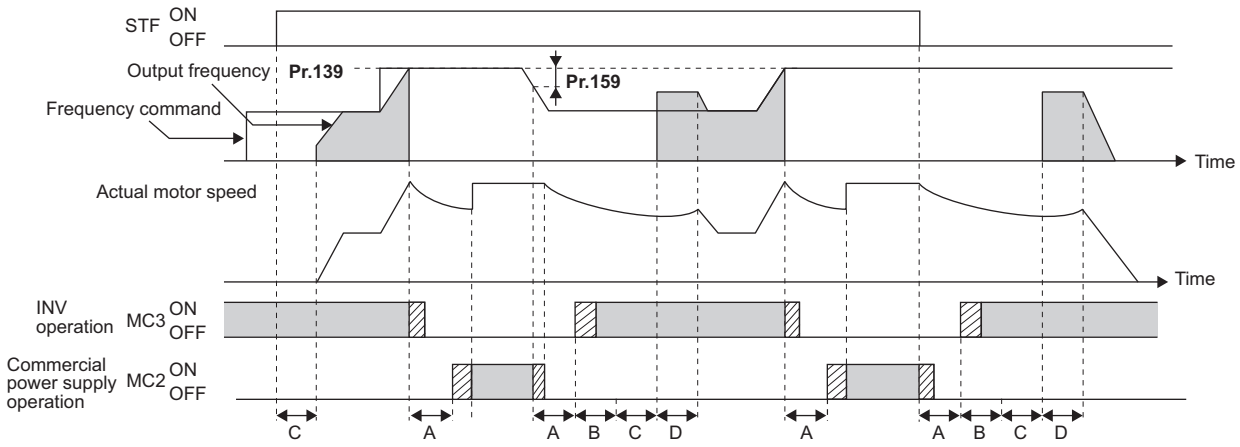

A : **Pr.136 MC switchover interlock time** B : **Pr.137 Start waiting time**
C : **Pr.57 Restart coasting time** D : **Pr.58 Restart cushion time**

◆Operation

• Procedure for operation

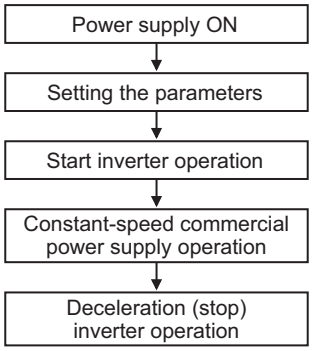

- **Pr.135** = "1" (open collector output terminal of inverter)
- **Pr.136** = "2.0 s"
- **Pr.137** = "1.0 s" (Set the time until MC3 is actually turned ON and the inverter and motor are electrically connected. If the time is short, the restart may not function properly.)
- **Pr.57** = "0.5 s"
- **Pr.58** = "0.5 s" (Always set this to switchover from the commercial power supply operation to the inverter operation.)

• Signal operation after setting parameters

Status	MRS	CS	STF	MC1	MC2	MC3	Remarks
Power ON	OFF (OFF)	OFF (OFF)	OFF (OFF)	OFF→ON (OFF→ON)	OFF (OFF)	OFF→ON (OFF→ON)	External operation mode (PU operation mode)
At start (Inverter)	OFF→ON	OFF→ON	OFF→ON	ON	OFF	ON	
During constant-speed operation (commercial power supply)	ON	ON→OFF	ON	ON	OFF→ON	ON→OFF	MC2 turns ON after MC3 turns OFF. Waiting time is 2 s (while coasting).
For deceleration, switched to the inverter operation (inverter)	ON	OFF→ON	ON	ON	ON→OFF	OFF→ON	MC3 turns ON after MC2 turns OFF. Waiting time is 4 s (while coasting).
Stop	ON	ON	ON→OFF	ON	OFF	ON	

NOTE

- Connect the control power (R1/L11, S1/L21) in front of the input-side MC1. If the control power is connected behind the input-side MC1, the electronic bypass sequence function will not operate.
- The electronic bypass sequence function is only enabled when **Pr.135** = "1" and in the External operation mode or combined operation mode (PU speed command and External operation command with **Pr.79** = "3"). MC1 and MC3 turn ON when **Pr.135** = "1" and in an operation mode other than mentioned above.
- MC3 turns ON when the MRS and CS signals are ON and the STF(STR) signal is OFF. If the motor was coasted to a stop from commercial power supply operation at the previous stop, the motor starts running only after waiting the time set in **Pr.137**.
- Inverter operation is only available when the MRS, STF(STR), and CS signals are ON. In all other cases (when the MRS signal is ON), commercial power supply operation is available.
- When the CS signal is OFF, the motor switches to the commercial power supply operation. However, when the STF(STR) signal is OFF, the motor decelerates to a stop during inverter operation.
- From the point where MC2 and MC3 are both turned OFF, there is a waiting time set in **Pr.136**, till MC2 or MC3 is turned ON.
- Even when the electronic bypass sequence is enabled (**Pr.135** = "1"), the **Pr.136 and Pr.137** settings are ignored in PU operation mode.
  In addition, the input terminals (STF, CS, MRS, OH) return to perform their normal functions.
- When the electronic bypass sequence function (**Pr.135** = "1") and PU operation interlock function (**Pr.79** = "7") are used at the same time, the MRS signal is shared with the PU operation external interlock if the X12 signal is not assigned. (The inverter operation is available when the MRS and CS signals are ON.)
- Set the acceleration time to the level that does not activate the stall prevention operation.
- When switching to the commercial power supply operation while a failure such as an output short circuit is occurring between the magnetic contactor MC3 and the motor, the damage may further spread. When a failure occurs between the MC3 and motor, make sure to provide a protection circuit, such as using the OH signal input.
- Changing the terminal functions with **Pr.178 to Pr.189 and Pr.190 to Pr.196** may affect other functions. Set parameters after confirming the function of each terminal.
- Switching with the electronic bypass sequence is not available during retry. Switching occurs after the retry. When the electronic bypass is valid at a fault (**Pr.138**="1"), switching occurs also during retry.
- When the electronic bypass sequence function and the retry function of the converter unit are used at the same time for the separated converter type, set 101 or more in the number of retries at fault occurrence (**Pr.67**) on the converter unit side. When a value less than 100 is set, ALM signal does not turn ON until the retry count is exceeded. In this case, the electronic bypass at a fault is not performed until the retry count is exceeded.

◆Operation in combination with the self power management function for the separated converter type

- When the self power management function is used at the same time for the separated converter type, the input signal operations are as follows.

X95 (Converter unit fault)	X96 (Converter unit fault (E.CPU, E.OHT))	X94 (Control signal for main circuit power supply MC)	MC operation*3			Converter status
			MC1	MC2	MC3	
OFF	OFF	ON	○*2	×	×	Converter fault (E.OHT (**Pr.248**="2"))
		OFF	×	×	×	Converter fault (E.OHT (**Pr.248**="1"), E.CPU)
ON	ON	ON	○*2	-	-	Converter normal
OFF	ON	ON	○*2	-*1	×	Converter fault (other than the faulty circuit fault or E.OHT) (**Pr.248**="2")
		OFF	×	-*1	×	Converter fault (other than E.OHT or E.CPU)

*1 When **Pr.138**="0 (electronic bypass invalid at a fault)", MC2 is OFF. When **Pr.138**="1 (electronic bypass valid at a fault)", MC2 is ON.

*2 The self power management operation is effective.

*3 MC operation
○: MC-ON
×: MC-OFF
-: During inverter operation: MC2-OFF, MC3-ON
During commercial power supply operation: MC2-ON, MC3-OFF

Parameters referred to

Pr.11 DC injection brake operation time page 502
Pr.57 Restart coasting time page 414, page 420
Pr.58 Restart cushion time page 414
Pr.79 Operation mode selection page 200
Pr.178 to Pr.189 (input terminal function selection) page 329
Pr.190 to Pr.196 (output terminal function selection) page 288

5.11.2 Self power management

By turning ON the magnetic contactor (MC) on the input side before the motor is started and turning OFF the MC after the motor is stopped, power is not supplied to the main circuit, reducing the standby power.

Pr.	Name	Initial value	Setting range	Description
248 A006	**Self power management selection**	0	0	Self power management function disabled
			1	Self power management function enabled (main circuit OFF at protective function activation)
			2	Self power management function enabled (main circuit OFF at protective function activation due to a circuit failure)
137 A002	**Start waiting time**	0.5 s	0 to 100 s	Set a time period that is a little longer than the time period from the ON signal input to the actual pick-up operation of MC1 (0.3 to 0.5 s).
254 A007	**Main circuit power OFF waiting time**	600 s	0 to 3600 s	Set the waiting time until the main circuit power supply is turned OFF after the motor is stopped.
			9999	The main circuit power supply is turned OFF only when the protective function selected by **Pr.248** is activated.
30 E300	**Regenerative function selection**	0	100, 101	Power supply to the inverter: AC (terminals R, S, and T) When power is supplied only to the control circuit, and then switched to be supplied to both the control and main circuits, inverter reset is not performed.
			0 to 2, 10, 11, 20, 21, 102, 110, 111, 120, 121	For other settings, refer to page 508.

◆Connection diagram

- For sink logic and **Pr.192**="17" (terminal R1, S1 inputs)

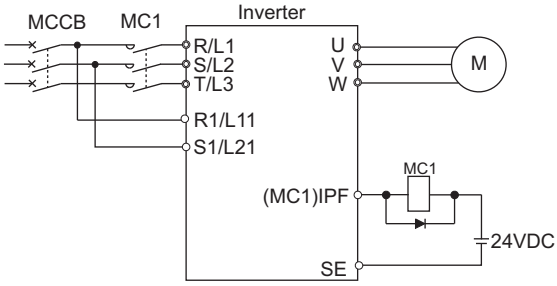

Standard models

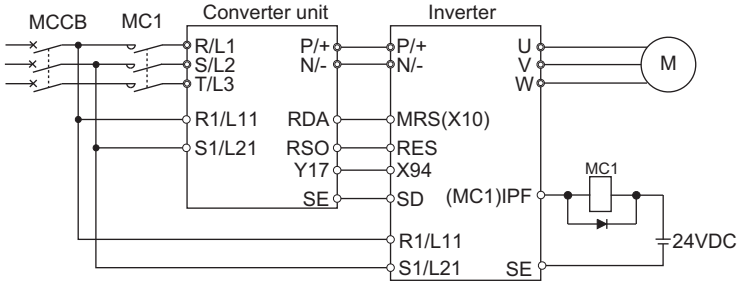

Separated converter type

- For sink logic and **Pr.192**="17" (24 V external power supply input)

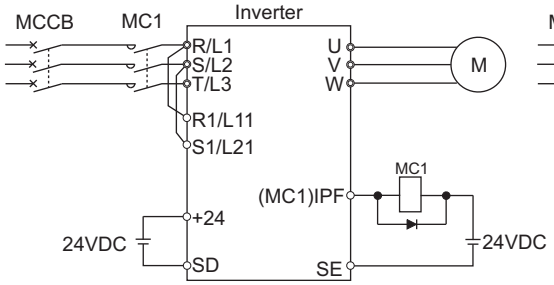

Standard models

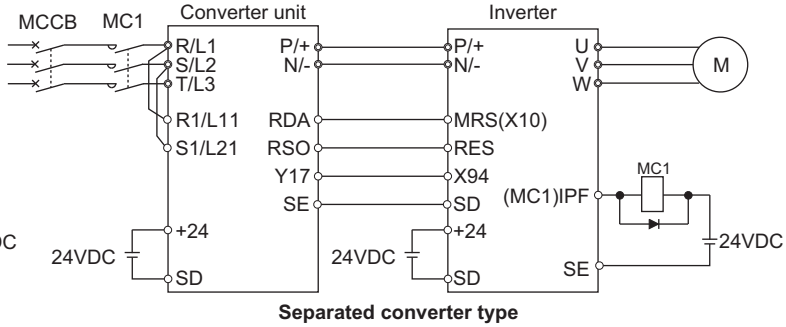

Separated converter type

◆Operation of the self power management function

- This function controls the magnetic contactor (MC) on the input side using the output relay to reduce the standby power during inverter stop. With the terminals R1/L11 and S1/L21 (refer to page 55) and 24 V external power supply input (refer to page 57), the main circuit power supply and control circuit power supply are separated, and the MC for main circuit power supply is controlled by the electronic bypass MC1 signal.
- Set **Pr.248 Self power management selection** = "1 or 2", **Pr.30 Regenerative function selection** ≠ "20, 21, 120, or 121" (other than DC feeding mode 2), and **Pr.190 to Pr.196 (output terminal function selection)** = "17 (positive logic)" to assign the Electronic bypass MC1 (MC1) signal to an output terminal.
- After the inverter is stopped and the time set in **Pr.11 DC injection brake operation time** and **Pr.254 Main circuit power OFF waiting time** have passed, turning OFF the MC1 signal releases the MC on the input side (main circuit power supply OFF). Set **Pr.254** to prevent frequent MC operation.
- Turning ON the start signal turns ON the MC1 signal and closes the MC on the input side (main circuit power supply ON). After the time set in **Pr.137 Start waiting time** has passed, the inverter starts. Set time slightly longer (about 0.3 to 0.5 s) than the time period from the MC1-ON to the actual pick-up operation of the MC is turned ON in **Pr.137**.

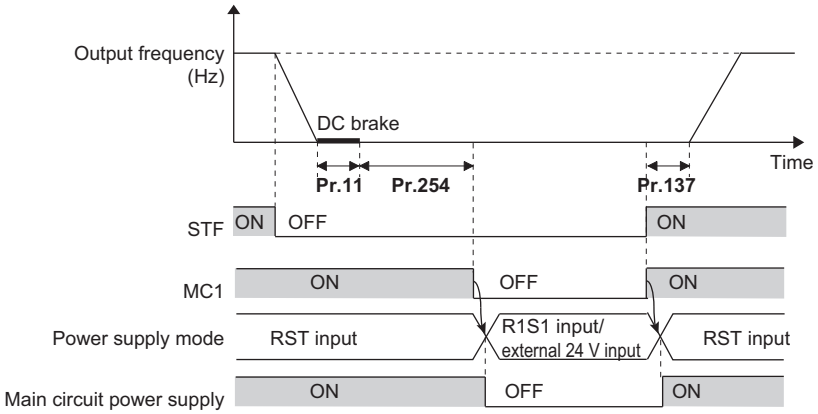

- When the protective function of the inverter is activated, the MC1 signal is immediately turned OFF according to the **Pr.248** setting. (The MC1 signal is turned OFF before the time set in **Pr.254** has passed.)
  When **Pr.248**="1", the MC1 signal is turned OFF when the protective function is activated due to any cause.
  When **Pr.248**="2", the MC1 signal is turned OFF only when the protective function is activated due to an error resulted from a failure in the inverter circuit or a wiring error (refer to the following table). (For the alarm details, refer to page 535.)

Fault record
Inrush current limit circuit fault (E.IOH)
CPU fault (E.CPU)
CPU fault (E.6)
CPU fault (E.7)
Parameter storage device fault (E.PE)
Parameter storage device fault (E.PE2)
24 VDC power fault (E.P24)
Operation panel power supply short circuit/RS-485 terminals power supply short circuit (E.CTE)
Output side earth (ground) fault overcurrent (E.GF)
Output phase loss (E.LF)
Brake transistor alarm detection (E.BE)
Internal circuit fault (E.13/E.PBT)

(A) Application parameters

- To enable the self power management function for the separated converter type, enable the self power management function also on the converter unit side. To activate the self power management function when a converter unit fault occurs, connect the terminal to which Y17 signal of the converter unit is assigned and the terminal to which X94 signal of the inverter is assigned.

Y17 output signal (on the converter unit side)	MC1 output signal (inverter side)	MC1 output signal actual operation	Main circuit power supply
OFF	OFF	OFF	Stop
OFF	ON	OFF	Stop
ON	OFF	OFF	Stop
ON	ON	ON	Supplied

NOTE

- When the start signal is turned OFF before the time set in **Pr.137** has passed after the start signal is turned ON, the inverter does not start and the MC1 signal is turned OFF after the time set in **Pr.254** has passed.
  If the start signal is turned ON again before the time set in **Pr.254** has passed, the inverter immediately starts outputting.

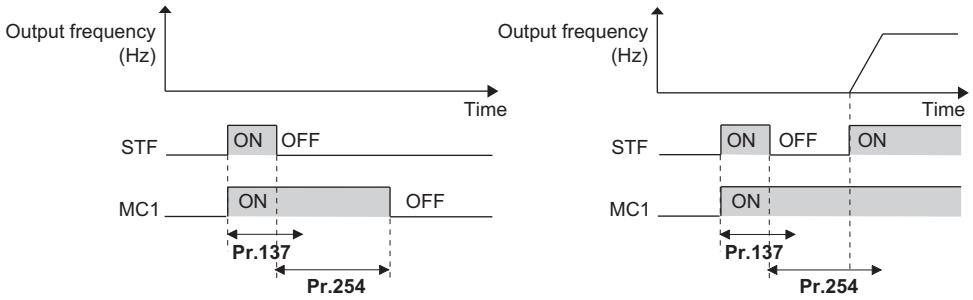

- At inverter reset, the status of the MC1 signal is held and operation of the magnetic contactor is not performed.
- When the inverter stops the output due to, for example, the Output stop (MRS) signal, the MC1 signal is turned OFF after the time set in **Pr.254** has passed.
- During the stop, turning ON the External DC injection brake operation start signal (X13) turns ON the MC1 signal.
- To avoid inverter reset when supplying power to the main circuit is started when power is supplied only to the control circuit, set 100 or more in **Pr.30**. (For the separated converter type, setting **Pr.30** of the converter unit is also required.)
- When supplying power to the main circuit is started when power is supplied only to the control circuit, there is a little waiting time before starting.
- Repeated operation of the magnetic contactor due to frequent start and stop or activation of the protective function may shorten the inverter life.
- Changing the terminal assignment using **Pr.190 to Pr.196 (output terminal function selection)** may affect the other functions. Set parameters after confirming the function of each terminal.

Parameters referred to

Pr.11 DC injection brake operation time page 502
Pr.30 Regenerative function selection page 508
Pr.190 to Pr.196 (output terminal function selection) page 288

5.11.3 Traverse function

The traverse operation, which oscillates the frequency at a constant cycle, is available.

Pr.	Name	Initial value	Setting range	Description
592 A300	**Traverse function selection**	0	0	Traverse function invalid
			1	Traverse function valid only in External operation mode
			2	Traverse function valid regardless of the operation mode
593 A301	**Maximum amplitude amount**	10%	0 to 25%	Level of amplitude during traverse operation
594 A302	**Amplitude compensation amount during deceleration**	10%	0 to 50%	Compensation amount during amplitude inversion (from acceleration to deceleration)
595 A303	**Amplitude compensation amount during acceleration**	10%	0 to 50%	Compensation amount during amplitude inversion (from deceleration to acceleration)
596 A304	**Amplitude acceleration time**	5 s	0.1 to 3600 s	Time period of acceleration during traverse operation
597 A305	**Amplitude deceleration time**	5 s	0.1 to 3600 s	Time period of deceleration during traverse operation

- Setting **Pr.592 Traverse function selection** = "1 or 2" will enable the traverse function.
- Assigning the Traverse function selection (X37) signal to the input terminal will enable the traverse function only when the X37 signal is ON. (When the X37 signal is not assigned, the traverse function is always available.) To input the X37 signal, set "37" in any of **Pr.178 to Pr.189 (input terminal function selection)** to assign the function to a terminal.

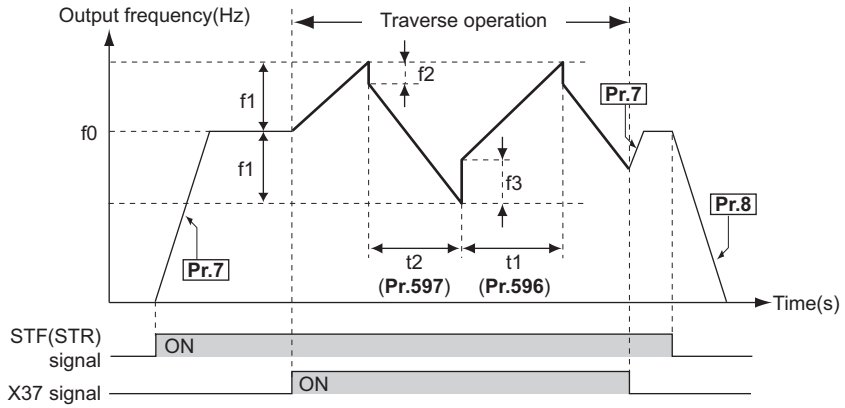

f0: set frequency
f1: amplitude amount from the set frequency (f0 × **Pr.593**/100)
f2: compensation amount at transition from acceleration to deceleration (f1 × **Pr.594**/100)
f3: compensation amount at transition from deceleration to acceleration (f1 × **Pr.595**/100)
t1: time from acceleration during traverse operation (Time from (f0 – f1) to (f0 + f1)) (**Pr.596**)
t2: time from deceleration during traverse operation (Time from (f0 + f1) to (f0 – f1)) (**Pr.597**)

- The motor accelerates to the set frequency f0 according to the normal **Pr.7 Acceleration time** at turn ON of the start command (STF or STR).
- When the output frequency reaches f0 and the X37 signal turns ON, the inverter begins traverse operation and accelerates to f0 + f1. The acceleration time at this time is according to the **Pr.596** setting. (If the X37 signal turns ON before the output frequency reaches f0, traverse operation begins after the output frequency reaches f0.)
- After the inverter accelerates to f0 + f1, this is compensated with f2 (f1 × **Pr.594**), and the inverter decelerates to f0 - f1. The deceleration time at this time is according to the **Pr.597** setting.
- After the inverter decelerates to f0 - f1, this is compensated with f3 (f1 × **Pr.595**), and the inverter accelerates again to f0 + f1.
- When the X37 signal turns OFF during traverse operation, the inverter accelerates/decelerates to f0 according to the normal acceleration/deceleration time (**Pr.7, Pr.8**). If the start command (STF or STR) is turned OFF during traverse operation, the inverter decelerates to a stop according to the normal deceleration time (**Pr.8**).

NOTE

- If the set frequency (f0) and traverse operation parameters (**Pr.598 to Pr.597**) are changed during traverse operation, this is applied in operations after the output frequency reaches f0 before the change was made.
- If the output frequency exceeds **Pr.1 Maximum frequency** or **Pr.2 Minimum frequency** during traverse operation, the output frequency is clamped at the maximum/minimum frequency when the set pattern exceeds the maximum/minimum frequency.
- When the traverse function and S-pattern acceleration/deceleration (**Pr.29** ≠ "0") are selected, S-pattern acceleration/deceleration operation occurs only in the range operated at the normal acceleration/deceleration time (**Pr.7, Pr.8**). Acceleration/deceleration during traverse operation is performed linearly.
- If stall prevention activates during traverse operation, traverse operation stops and normal operation begins. When stall prevention operation is completed, the inverter accelerates/decelerates to f0 at the normal acceleration/deceleration time (**Pr.7, Pr.8**). After the output frequency reaches f0, the traverse operation begins again.
- If the value of the amplitude inversion compensation amount (**Pr.594, Pr.595**) is too large, an overvoltage trip or stall prevention occurs, and pattern operation cannot be performed as set.
- Changing the terminal assignment using **Pr.178 to Pr.189 (input terminal function selection)** may affect the other functions. Set parameters after confirming the function of each terminal.

Parameters referred to

Pr.3 Base frequency ☞ page 497
Pr.180 to Pr.186 (input terminal function selection) ☞ page 329
Pr.190 to Pr.195 (output terminal function selection) ☞ page 288

5.11.4 Cleaning function

This is a function to remove stains or foreign matter on the impellers or fans of pumps by setting a forward/reverse rotation sequence.

Pr.	Name	Initial value	Setting range	Description
1469 A420	**Number of cleaning times monitor**	0	0 to 255	Displays the number of cleaning times. (Read-only)
1470 A421	**Number of cleaning times setting**	0	0 to 255	Set the number of cleaning times.
1471 A422	**Cleaning trigger selection**	0	0 to 15	Select the condition to start cleaning.
1472 A423	**Cleaning reverse rotation frequency**	30 Hz	0 to 590 Hz	Set the reverse rotation frequency for cleaning operation.
1473 A424	**Cleaning reverse rotation operation time**	5 s	0 to 3600 s	Set the operating time after the cleaning reverse rotation frequency is reached.
1474 A425	**Cleaning forward rotation frequency**	9999	0 to 590 Hz	Set the forward rotation frequency for cleaning operation.
			9999	As set in **Pr.1472**.
1475 A426	**Cleaning forward rotation operation time**	9999	0 to 3600 s	Set the operating time after the cleaning forward rotation frequency is reached.
			9999	As set in **Pr.1473**.
1476 A427	**Cleaning stop time**	5 s	0 to 3600 s	Set the stop time when the rotation is switched from forward to reverse or from reverse to forward.
1477 A428	**Cleaning acceleration time**	9999	0 to 3600 s	Set the acceleration time during cleaning.
			9999	Acceleration time for normal operation
1478 A429	**Cleaning deceleration time**	9999	0 to 3600 s	Set the deceleration time during cleaning.
			9999	Deceleration time for normal operation
1479 A430	**Cleaning time trigger**	0	0	Time trigger disabled
			0.1 to 6000 h	Cleaning is performed at a set time interval.

◆Outline of the cleaning operation

- Setting a number in **Pr.1470 Number of cleaning times setting** enables the cleaning function.
- The cleaning operation is started when the trigger set in **Pr.1471** or **Pr.1479** occurs, or when X98 signal turns ON. When the cleaning is started initially, the operation in the opposite direction to the start command is performed.

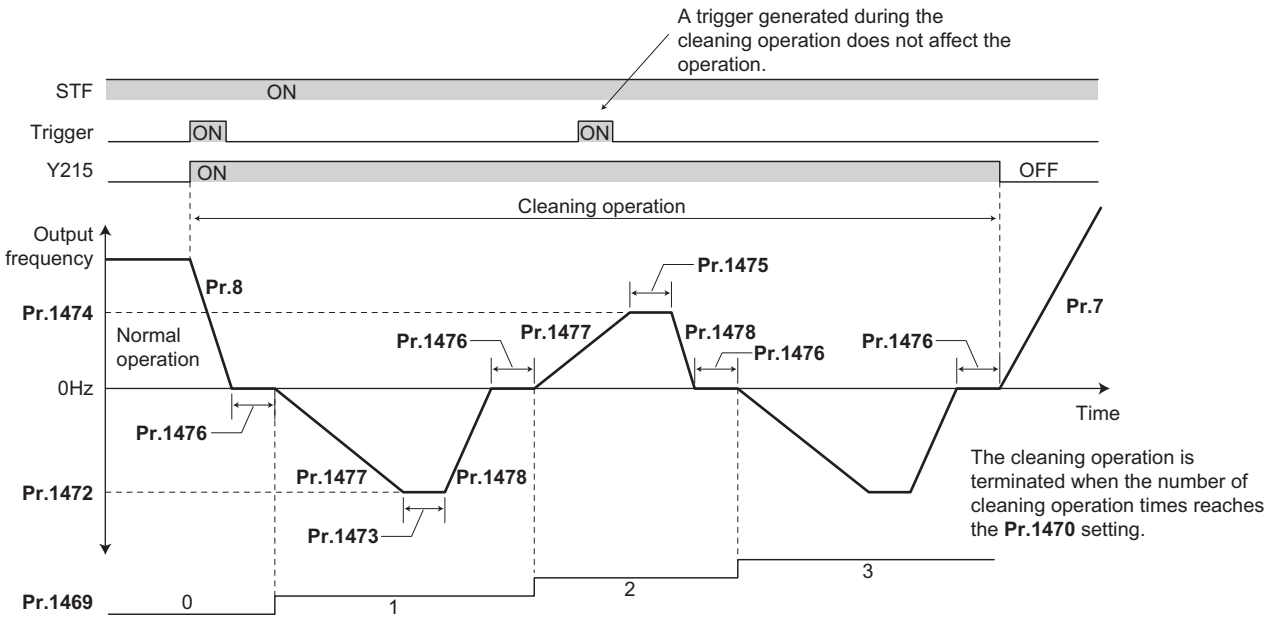

- When the number of times of cleaning operation is an odd number, the operation in the opposite direction to the start command is performed. When the number of cleaning times is an even number, the operation in the start command direction is performed.

- When the motor rotation direction is restricted in **Pr.78 Reverse rotation prevention selection**, rotation is performed not in the prohibited direction but in the permitted direction.

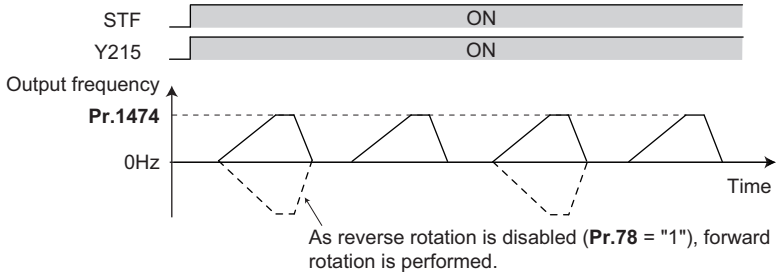

- Use **Pr.1472 Cleaning reverse rotation frequency** and **Pr.1474 Cleaning forward rotation frequency** to set the running frequency for cleaning operation, and use **Pr.1473 Cleaning reverse rotation operation time** and **Pr.1475 Cleaning forward rotation operation time** to set the operating time after the cleaning running frequency is reached.
- Use **Pr.1477 Cleaning acceleration time** and **Pr.1478 Cleaning deceleration time** to set the acceleration/deceleration time during cleaning operation.
- Y215 signal turns ON during cleaning operation. For the Y215 signal, assign the function by setting "215 (forward action)" or "315 (reverse action)" in any of **Pr.190 to Pr.196 (output terminal function selection)**.

◆Cleaning trigger selection (Pr.1471, Pr.1479, X98 signal)

- Use **Pr.1471 Cleaning trigger selection** the trigger to start cleaning operation. As set in **Pr.1471**, cleaning operation is started when any of the applicable trigger conditions is satisfied.

Pr.1471 setting	Trigger factor	Value in each bit		Remarks
		0	1	
Bit 0	Start trigger	Trigger disabled	Trigger enabled	Turning ON of the start command is defined as a trigger. *1*6*7
Bit 1	Output current	Trigger disabled	Trigger enabled	Turning ON of Y12 signal is defined as a trigger. *2*5
Bit 2	PID upper/lower limit	Trigger disabled	Trigger enabled	Turning ON of FUP, FDN, FUP2, or FDN2 signal is defined as a trigger. *3*5
Bit 3	Load warning	Trigger disabled	Trigger enabled	Turning ON of LUP or LDN signal is defined as a trigger. *4*5
—	X98 signal input	—		Turning ON of X98 signal is defined as a trigger. (This trigger is always enabled by assigning X98 signal to an input terminal.)
—	Time trigger	—		When **Pr.1479** ≠ "0", the trigger is enabled.

*1 The ON state at power-ON or inverter reset is not regarded as a trigger.
*2 Use **Pr.150 and Pr.151** to set the detection level. (Refer to **page 296**.)
*3 Use **Pr.131, Pr.132, Pr.1143, and Pr.1144** to set the detection level. When the frequency reflection is not provided for the PID setting, or when the function is disabled, a trigger does not occur. (Refer to **page 378**.)
*4 Set the load characteristics fault detection function. When the function is disabled, a trigger does not occur. (Refer to **page 255**.)
*5 The output signal can be used as a trigger if the signal is not assigned to a terminal.
*6 When the automatic restart after instantaneous power failure is set for every start, or when the online auto tuning is enabled, cleaning is started upon completion of the set operations.
*7 While the self power management is enabled, the start trigger is disabled.

- Convert a bit image (binary) of the trigger factor into a decimal value, and set the value in **Pr.1471**.

Pr.1471		bit 3	bit 2	bit 1	bit 0
Decimal	Binary				
15	1111	○	○	○	○
14	1110	○	○	○	×
13	1101	○	○	×	○
12	1100	○	○	×	×
11	1011	○	×	○	○
10	1010	○	×	○	×
9	1001	○	×	×	○
8	1000	○	×	×	×
7	0111	×	○	○	○
6	0110	×	○	○	×
5	0101	×	○	×	○
4	0100	×	○	×	×
3	0011	×	×	○	○
2	0010	×	×	○	×
1	0001	×	×	×	○
0	0000	×	×	×	×

○: Trigger enabled, ×: Trigger disabled

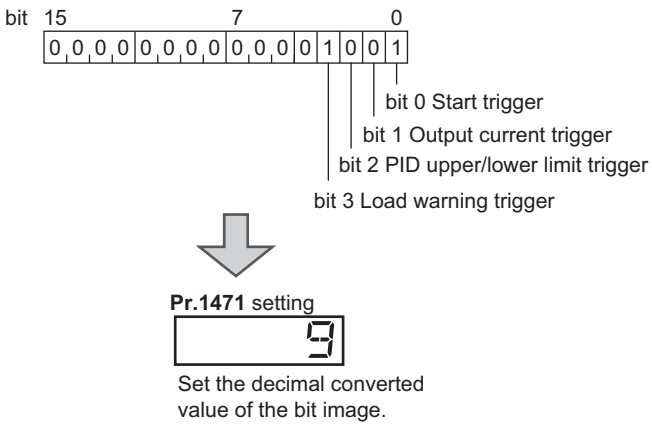

- Turning ON of X98 signal can be used as a trigger to start the cleaning operation. For the X98 signal input, set "98" in any of **Pr.178 to Pr.189** to assign the function.
- When using the cleaning function for the purpose of periodic maintenance in such applications that require continuous pump operation for a long time, use a time trigger. The time trigger is enabled by setting a time period before starting the cleaning operation in **Pr.1479 Cleaning time trigger**. The timer starts when the timer starting condition is satisfied, and the cleaning operation is performed at a time interval set in **Pr.1479**.
- Starting conditions of the timer for a time trigger
  - When the start command turns ON
  - When the cleaning ends

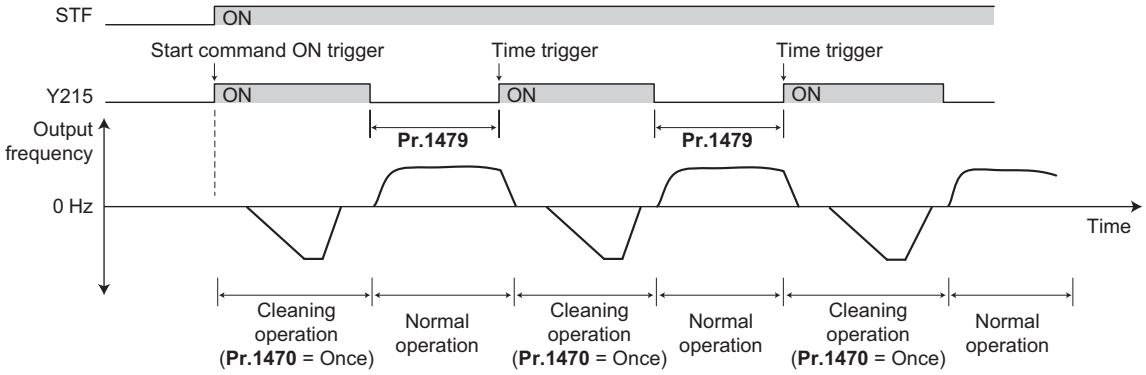

◆Cleaning operation by the cleaning signal (X97 signal)

- When X97 signal is assigned to an input terminal, the cleaning operation can be finished when the cleaning signal (X97) is turned from ON to OFF.
- For the X97 signal input, set "97" in any of **Pr.178 to Pr.189** to assign the function.

Pr.1470 setting	X97 signal		Cleaning operation	Cleaning end condition
	Assignment	ON/OFF		
0	Optional	Optional	Invalid	-
Other than 0	Not assigned	-	Enabled	After cleaning is performed for the number of times set in **Pr.1470**
	Assigned	OFF	Invalid	-
		ON	Enabled	• After cleaning is performed for the number of times set in **Pr.1470** • When X97 signal turns OFF

NOTE

- When a trigger occurs during the following operations, the cleaning operation is started upon completion of the following operations.
  Automatic restart after instantaneous power failure, online auto tuning at startup
- The following functions are disabled during cleaning operation.
  PID control automatic switchover frequency, PID control SLEEP function, pre-charge fault, determination of pre-charge ending with parameters, PID gain tuning, electronic bypass with the automatic switchover frequency of the inverter (**Pr.139**), automatic switchover of auxiliary motors of the multi-pump function, output stop function (**Pr.522**), restart at every start during cleaning
- When the stall prevention is activated during acceleration of the cleaning function, the operation is shifted to the cleaning deceleration operation.
- If the number of cleaning times set in **Pr.1470** is an even number, the operation is shifted to the normal operation after the cleaning forward/reverse operation time (**Pr.1473**/**Pr.1475**) of the final cleaning operation has elapsed.
- Changing the terminal assignment with **Pr.178 to Pr.189 and Pr.190 to Pr.196** may affect other functions. Set parameters after confirming the function of each terminal.

Parameters referred to

Pr.178 to Pr.189 (input terminal function selection) ☞ page 329
Pr.190 to Pr.196 (output terminal function selection) ☞ page 288
Pr.7 Acceleration time, Pr.8 Deceleration time ☞ page 187

5.11.5 PID control

Process control such as flow rate, air volume or pressure are possible on the inverter.
A feedback system can be configured and PID control can be performed using the terminal 2 input signal or parameter setting value as the set point, and the terminal 4 input signal as the feedback value.

Pr.	Name	Initial value	Setting range	Description
127 A612	**PID control automatic switchover frequency**	9999	0 to 590 Hz	Set the value at which control is automatically switched to PID control.
			9999	Without PID control automatic switchover function
128 A610	**PID action selection**	0	0, 10, 11, 20, 21, 50, 51, 60, 61, 70, 71, 80, 81, 90, 91, 100, 101, 1000, 1001, 1010, 1011, 2000, 2001, 2010, 2011	Select how to input the deviation value, measured value and set point, and forward and reverse action.
129 A613	**PID proportional band**	100%	0.1 to 1000%	If a narrow proportional band is set (small parameter setting value), the manipulated amount changes considerably by slight changes in the measured value. As a result, response improves as the proportional band becomes narrower, though stability worsens as shown by the occurrence of hunting. Gain Kp=1/proportional band
			9999	Without proportional band
130 A614	**PID integral time**	1 s	0.1 to 3600 s	With deviation step input, this is the time (Ti) used for obtaining the same manipulated amount as proportional band (P) by only integral (I) action. Arrival to the set point becomes quicker the shorter an integral time is set, though hunting is more likely to occur.
			9999	Without integral control
131 A601	**PID upper limit**	9999	0 to 100%	Sets the upper limit. The FUP signal is output when the feedback value exceeds this setting. The maximum input (20 mA/5 V/10 V) of the measured value (terminal 4) is equivalent to 100%.
			9999	No function
132 A602	**PID lower limit**	9999	0 to 100%	Set the lower limit. The FDN signal is output when the measured value falls below the setting range. The maximum input (20 mA/5 V/10 V) of the measured value (terminal 4) is equivalent to 100%.
			9999	No function
133 A611	**PID action set point**	9999	0 to 100%	Set the set point during PID control.
			9999	Set point set by **Pr.128**.
134 A615	**PID differential time**	9999	0.01 to 10 s	With deviation ramp input, this is the time (Td) used for obtaining the manipulated amount only by proportional action (P). Response to changes in deviation increase greatly as the differential time increases.
			9999	Without differential control
553 A603	**PID deviation limit**	9999	0 to 100%	The Y48 signal is output when the absolute value of the deviation exceeds the deviation limit value.
			9999	No function
554 A604	**PID signal operation selection**	0	0 to 3, 10 to 13	The action when the upper or lower limit for a measured value input is detected or when a limit for the deviation is detected can be selected. The operation for PID output suspension function can be selected.
575 A621	**Output interruption detection time**	1 s	0 to 3600 s	If the status where the output frequency after PID calculation is less than the **Pr.576** setting is continuously the **Pr.575** set time or more, inverter running is suspended.
			9999	Without output interruption function
576 A622	**Output interruption detection level**	0 Hz	0 to 590 Hz	Set the frequency at which output interruption is performed.
577 A623	**Output interruption cancel level**	1000%	900 to 1100%	Level at which the PID output suspension function is released. Set "**Pr.577** -1000%".

Pr.	Name	Initial value	Setting range	Description	
609 A624	PID set point/deviation input selection	2	1	Input of set point, deviation value from terminal 1	
			2	Input of set point, deviation value from terminal 2	
			3	Input of set point, deviation value from terminal 4	
			4	Input of set point, deviation value via CC-Link communication	
			5	Input of set point, deviation value by PLC function	
610 A625	PID measured value input selection	3	1	Terminal 1 input	Direct input of the measured value
			2	Terminal 2 input	
			3	Terminal 4 input	
			4	CC-Link communication input	
			5	PLC function input	
			101	Terminal 1 input	Input of the square root of the measured value
			102	Terminal 2 input	
			103	Terminal 4 input	
			104	CC-Link communication input	
			105	PLC function input	
1015 A607	Integral stop selection at limited frequency	0	0	Integral stopped at limited frequency, integral cleared during output interruption	
			1	Integral continued at limited frequency, integral cleared during output interruption	
			10	Integral stopped at limited frequency, integral stopped during output interruption	
			11	Integral continued at limited frequency, integral stopped during output interruption	
1460 A683	PID multistage set point 1	9999	0 to 100%	Seven set points can be set according to the combination of the PDI1, PDI2, and PDI3 signals. 9999: Not selected	
1461 A684	PID multistage set point 2				
1462 A685	PID multistage set point 3				
1463 A686	PID multistage set point 4				
1464 A687	PID multistage set point 5				
1465 A688	PID multistage set point 6				
1466 A689	PID multistage set point 7				

(A) Application parameters

Pr.	Name	Initial value	Setting range	Description	
753 A650	**Second PID action selection**	0	0, 10, 11, 20, 21, 50, 51, 60, 61, 70, 71, 80, 81, 90, 91, 100, 101, 1000, 1001, 1010, 1011, 2000, 2001, 2010, 2011	Refer to **Pr.128**.	Set the second PID control. For how to enable the second PID control, refer to page 392.
754 A652	**Second PID control automatic switchover frequency**	9999	0 to 600 Hz, 9999	Refer to **Pr.127**.	
755 A651	**Second PID action set point**	9999	0 to 100%, 9999	Refer to **Pr.133**.	
756 A653	**Second PID proportional band**	100	0.1 to 1000%, 9999	Refer to **Pr.129**.	
757 A654	**Second PID integral time**	1 s	0.1 to 3600 s, 9999	Refer to **Pr.130**.	
758 A655	**Second PID differential time**	9999	0.01 to 10 s, 9999	Refer to **Pr.134**.	
1140 A664	**Second PID set point/ deviation input selection**	2	1 to 5	Refer to **Pr.609**.	
1141 A665	**Second PID measured value input selection**	3	1 to 5, 101 to 105	Refer to **Pr.610**.	
1143 A641	**Second PID upper limit**	9999	0 to 100%, 9999	Refer to **Pr.131**.	
1144 A642	**Second PID lower limit**	9999	0 to 100%, 9999	Refer to **Pr.132**.	
1145 A643	**Second PID deviation limit**	9999	0 to 100%, 9999	Refer to **Pr.553**. (Y205 signal is output.)	
1146 A644	**Second PID signal operation selection**	0	0 to 3, 10 to 13	Refer to **Pr.554**.	
1147 A661	**Second output interruption detection time**	1 s	0 to 3600 s, 9999	Refer to **Pr.575**.	
1148 A662	**Second output interruption detection level**	0 Hz	0 to 600 Hz	Refer to **Pr.576**.	
1149 A663	**Second output interruption cancel level**	1000%	900 to 1100%	Refer to **Pr.577**.	

◆Basic configuration of PID control

• **Pr.128** ="10, 11" (deviation value signal input)

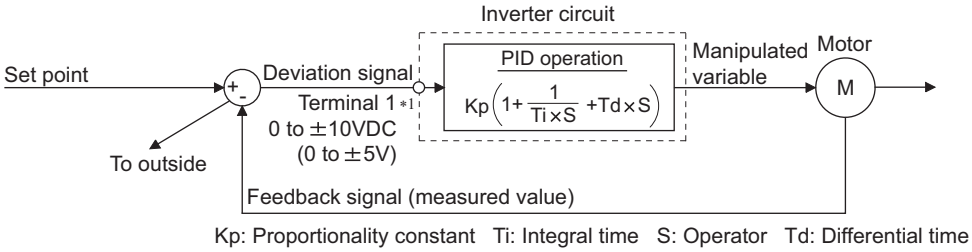

*1 Set "0" to **Pr.868 Terminal 1 function assignment**. When **Pr.868** ≠ "0", PID control is invalid.

• **Pr.128** = "20, 21" (measured value input)

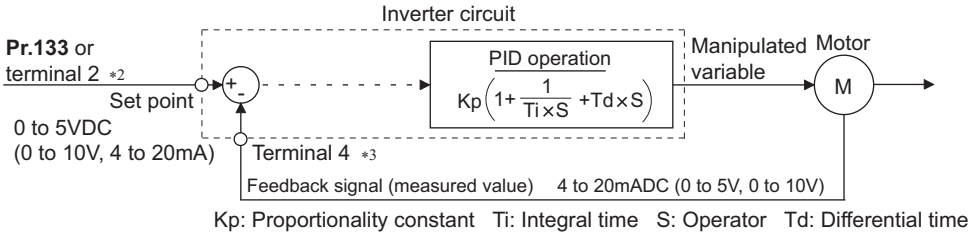

*2 Note that the input of terminal 1 is added to the set point of terminal 2 as a set point.

*3 Set "0" to **Pr.858 Terminal 4 function assignment**. When **Pr.858** ≠ "0", PID control is invalid.

◆PID action outline

• PI action

PI action is a combination of proportional action (P) and integral action (I), and applies a manipulated amount according to the size of the deviation and transition or changes over time.

[Example of action when the measured value changes in a stepped manner]

(Note) PI action is the result of P and I actions being added together.

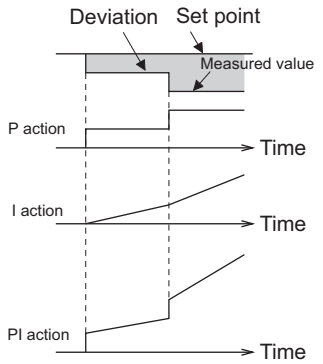

• PD action

PD action is a combination of proportional action (P) and differential action (D), and applies a manipulated amount according to the speed of the deviation to improve excessive characteristics.

[Example of action when the measured value changes proportionately]

(Note) PD action is the result of P and D actions being added together.

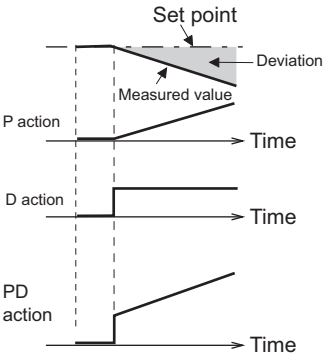

(A) Application parameters

• PID action

PID action is a combination of PI and PD action, which enables control that incorporates the respective strengths of these actions.

(Note) PID action is the result of all P, I and D actions being added together.

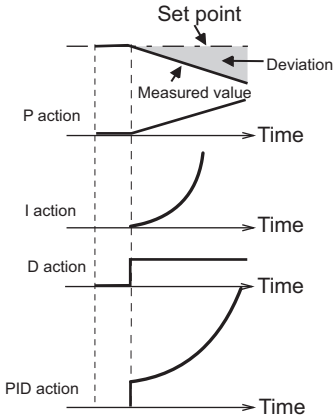

• Reverse action

When deviation X = (set point - measured value) is a plus value, the manipulated amount (output frequency) is increased, and when the deviation is a minus value, the manipulated amount is decreased.

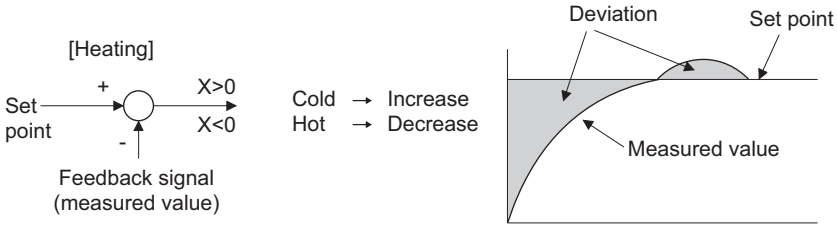

• Forward action

When deviation X = (set point - measured value) is a minus value, the manipulated amount (output frequency) is increased, and when the deviation is a plus value, the manipulated amount is decreased.

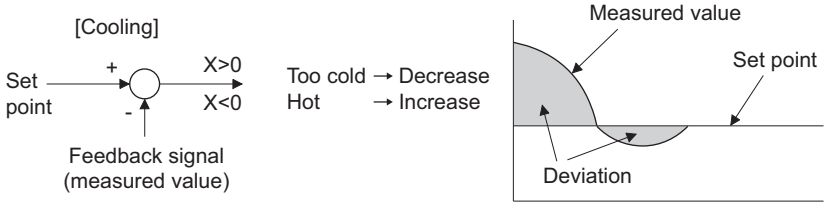

Relationship between deviation and manipulated amount (output frequency)

PID action setting	Deviation	
	Plus	Minus
Reverse action	↗	↘
Forward action	↘	↗

◆Connection diagram

Sink logic

Pr.128=20
Pr.183=14
Pr.191=47
Pr.192=16
Pr.193=14
Pr.194=15

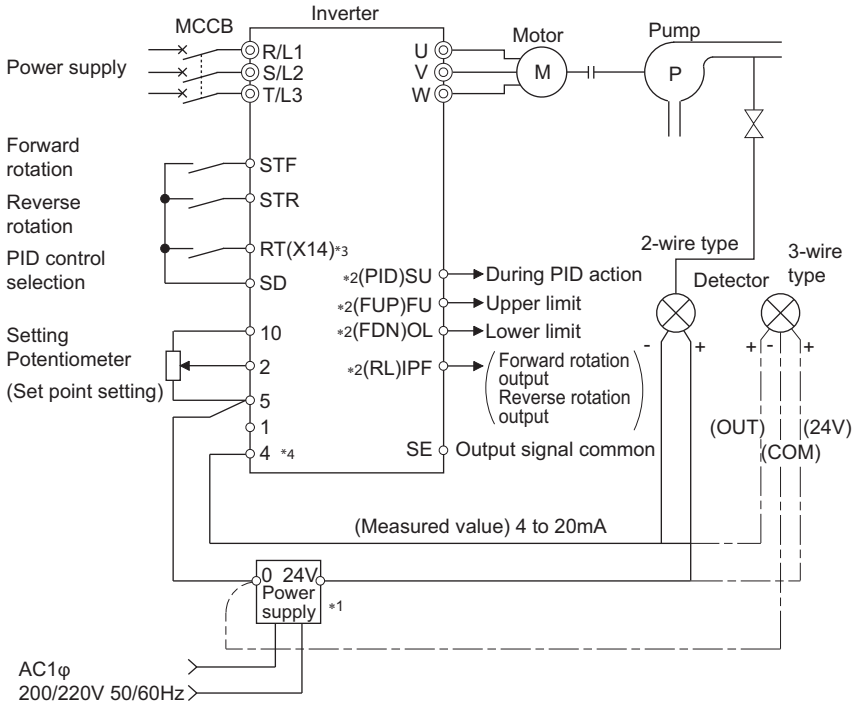

*1 Prepare a power supply matched to the power supply specification of the detector.
*2 The output signal terminal to be used differs according to the **Pr.190 to Pr.196 (output terminal function selection)** setting.
*3 The input signal terminal to be used differs according to the **Pr.178 to Pr.189 (input terminal function selection)** setting.
*4 The AU signal need not be input.

◆Selection of deviation value, measured value and set point input method, and PID action method (Pr.128, Pr.609, Pr.610)

- Using **Pr.128**, select the input method for the PID set point, measured value detected by the meter, and externally calculated deviation. Also, select forward or reverse action.
- Switch the power voltage/current specifications of terminals 2 and 4 by **Pr.73 Analog input selection** or **Pr.267 Terminal 4 input selection** to match the specification of the input device. After changing the **Pr.73 and Pr.267** settings, check the voltage/current input selection switch. Incorrect setting may cause a fault, failure or malfunction. (Refer to page 306 for the setting.)

Pr.128 setting	Pr.609 Pr.610	PID action	Set point input	Measured value input	Deviation input
0	Invalid	PID invalid	—	—	—
10		Reverse action	—	—	Terminal 1
11		Forward action			
20		Reverse action	Terminal 2 or **Pr.133** *1	Terminal 4	—
21		Forward action			
50	Invalid	Reverse action	—	—	CC-Link communication*2, BACnet communication
51		Forward action			
60		Reverse action	CC-Link communication*2, BACnet communication	CC-Link communication*2, BACnet communication	—
61		Forward action			
70		Reverse action	—	—	PLC function (with frequency reflected)
71		Forward action			
80		Reverse action	PLC function (with frequency reflected)*3	PLC function (with frequency reflected)*3	—
81		Forward action			
90		Reverse action	—	—	PLC function (without frequency reflected)*3
91		Forward action			
100		Reverse action	PLC function (without frequency reflected)*3	PLC function (without frequency reflected)*3	—
101		Forward action			

(A) Application parameters

Pr.128 setting	Pr.609 Pr.610	PID action	Set point input	Measured value input	Deviation input
1000	Valid	Reverse action	According to **Pr.609** *1	According to **Pr.610**	—
1001		Forward action			
1010		Reverse action	—	—	According to **Pr.609**
1011		Forward action			
2000		Reverse action (without frequency reflected)	According to **Pr.609** *1	According to **Pr.610**	—
2001		Forward action (without frequency reflected)			
2010		Reverse action (without frequency reflected)	—	—	According to **Pr.609**
2011		Forward action (without frequency reflected)			

*1 When **Pr.133** ≠ "9999", the **Pr.133** setting is valid.

*2 For the details of CC-Link communication, refer to the Instruction Manual of the option FR-A8NC, FR-A8NCE.

*3 For the details of the PLC function, refer to the PLC Function Programming Manual.

- The set point/deviation input method can also be flexibly selected by **Pr.609 PID set point/deviation input selection** and the measured value input method can be selected by **Pr.610 PID measured value input selection**. Selection by **Pr.609 and Pr.610** is valid when **Pr.128** = "1000 to 2011".

Setting value		Command source	Input method
Pr.609	Pr.610		
1	1	Terminal 1*4	Direct input
2	2	Terminal 2*4	
3	3	Terminal 4*4	
4	4	CC-Link communication	
5	5	PLC function	
—	101	Terminal 1*4	Square root input
—	102	Terminal 2*4	
—	103	Terminal 4*4	
—	104	CC-Link communication	
—	105	PLC function	

*4 When the same command source has been selected for the set point and measured value using **Pr.609** and **Pr.610**, set point input is invalid. (The inverter runs at set point 0%)

- When **Pr.610 PID measured value input selection** = "101 to 105", the square root of the input value is used as the measured value.

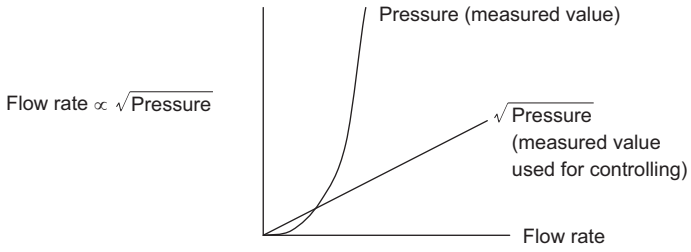

NOTE

- When terminals 2 and 4 are selected for deviation input, perform bias calibration using **C3** and **C6** to prevent a minus voltage from being entered as the deviation input signal. Input of a minus voltage might damage devices and the inverter.

- The following shows the relationship between the input values of the analog input terminals and set point, measured value and deviation. (Calibration parameter initial values)

Input terminal	Inspect specification*5	Relationship with analog input			Calibration parameter
		Set point	Result	Deviation	
Terminal 2	0 to 5 V	0 V=0% 5 V=100%	0 V=0% 5 V=100%	0 V=0% 5 V=100%	**Pr.125, C2 to C4**
	0 to 10 V	0 V=0% 10 V=100%	0 V=0% 10 V=100%	0 V=0% 10 V=100%	
	0 to 20 mA	0 mA=0% 20 mA=100%	0 mA=0% 20 mA=100%	0 V=0% 20 mA=100%	
Terminal 1	0 to ±5 V	-5 V to 0 V=0% 5 V=+100%	-5 V to 0 V=0% 5 V=+100%	-5 V=-100% 0 V=0% 5 V=+100%	When **Pr.128** = "10", **Pr.125, C2 to C4.** When **Pr.128** ≥ "1000", **C12 to C15.**
	0 to ±10 V	-10 V to 0 V=0% 10 V=+100%	-10 V to 0 V=0% 10 V=+100%	-10 V=-100% 0 V=0% 10 V=+100%	
Terminal 4	0 to 5 V	0 V to 1 V=0% 5 V=100%	0 Vto 1 V=0% 5 V=100%	0 V=-20% 1 V=0% 5 V=100%	**Pr.126, C5 to C7**
	0 to 10 V	0 V to 2 V=0% 10 V=100%	0 V to 2 V=0% 10 V=100%	0 V=-20% 1 V=0% 10 V=100%	
	0 to 20 mA	0 to 4 mA=0% 20 mA=100%	0 to 4 mA=0% 20 mA=100%	0 V=-20% 4 mA=0% 20 mA=100%	

*5 Can be changed by **Pr.73 and Pr.267** and the voltage/current input switch. (Refer to page 306.)

NOTE

- Always perform calibration after changing the voltage/input specification with **Pr.73**, **Pr.267**, and the voltage/current input selection switch.

◆Multistage set point input (Pr.1460 to Pr.1466)

- The set point can be selected by combining the ON/OFF status of the PDI1 to PDI3 signals. Up to eight set points can be selected. Use **Pr.1460 PID multistage set point 1 to Pr.1466 PID multistage set point 7** to set the target values for selection.
- When "9999" is set in the selected multistage set point parameter, PID control is performed according to the **Pr.128, Pr.609, and Pr.133** settings.

Selected set point	PDI1*1	PDI2*1	PDI3*1	Parameter for setting
—	OFF	OFF	OFF	As set in the **Pr.128** and **Pr.609** PID settings. As set **Pr.133** when **Pr.133**≠"9999".
Multistage set point 1	ON	OFF	OFF	**Pr.1460**
Multistage set point 2	OFF	ON	OFF	**Pr.1461**
Multistage set point 3	ON	ON	OFF	**Pr.1462**
Multistage set point 4	OFF	OFF	ON	**Pr.1463**
Multistage set point 5	ON	OFF	ON	**Pr.1464**
Multistage set point 6	OFF	ON	ON	**Pr.1465**
Multistage set point 7	ON	ON	ON	**Pr.1466**

*1 When functions are not assigned to the input terminals, the signals are treated as OFF.

NOTE

- The multistage set point input is not available for the second PID.
- The priority of the set point input is as follows: **Pr.1460 to Pr.1466** > **Pr.133** > **Pr.128**.

◆Input/output signals

- Assigning the PID control valid terminal signal (X14) to the input terminal by **Pr.178 to Pr.189 (input terminal function selection)** enables PID control to be performed only when the X14 signal is turned ON. When the X14 signal is OFF, regular inverter running is performed without PID action.
- Input signal

Signal	Function	Pr.178 to Pr.189 setting	Description
X14	PID control valid terminal	14	When the signal is assigned to the input terminal, PID control is enabled when the signal is ON.
X80	Second PID control valid terminal	80	
PDI1	PID multistage set point setting 1	38	The set point set in **Pr.1460 to Pr.1466** can be selected by combining the ON/OFF status of the signals.
PDI2	PID multistage set point setting 2	39	
PDI3	PID multistage set point setting 3	40	
X64	PID forward/reverse action switchover	64	PID control is switched between forward and reverse action without changing parameters by turning ON the signal.
X79	Second PID forward/ reverse action switchover	79	
X72	PID integral value reset	72	Integral and differential values can be reset by turning the signal ON.
X73	Second PID P control switchover	73	

- Output signal

Signal	Function	Pr.190 to Pr.196 setting value		Description
		positive logic	negative logic	
FUP	PID upper limit	15	115	Output when the measured value signal exceeds **Pr.131 PID upper limit (Pr.1143 Second PID upper limit)**.
FUP2	Second PID upper limit	201	301	
FDN	PID lower limit	14	114	Output when the measured value signal exceeds **Pr.132 PID lower limit (Pr.1144 Second PID lower limit)**.
FDN2	Second PID lower limit	200	300	
RL	PID forward/reverse rotation output	16	116	"Hi" is output when the output display of the parameter unit is forward rotation (FWD), and "Low" is output when the display is reverse rotation (REV) and stop (STOP).
RL2	Second PID forward/ reverse rotation output	202	302	
PID	During PID control activated	47	147	Turns ON during PID control. When the PID calculation result is not reflected to the output frequency (**Pr.128** < "2000"), the PID signal turns OFF at turn OFF of the start signal. When the PID calculation result is reflected to the output frequency (**Pr.128** ≥ "2000"), the PID signal turns ON regardless of the start signal status during PID calculation.
PID2	Second During PID control activated	203	303	
SLEEP	PID output interruption	70	170	Set **Pr.575 Output interruption detection time (Pr.1147 Second output interruption detection time)** ≠ "9999". This signal turns ON when the PID output suspension function is activated.
SLEEP2	During second PID output shutoff	204	304	

NOTE

- Changing the terminal functions with **Pr.178 to Pr.189 and Pr.190 to Pr.196** may affect other functions. Set parameters after confirming the function of each terminal.

◆PID automatic switchover control (Pr.127)

- The system can be started up more quickly by starting up without PID control activated.
- When **Pr.127 PID control automatic switchover frequency** is set, the startup is made without PID control until the output frequency reaches the **Pr.127** setting. Once the PID control starts, the PID control is continued even if the output frequency drops to **Pr.127** setting or lower.

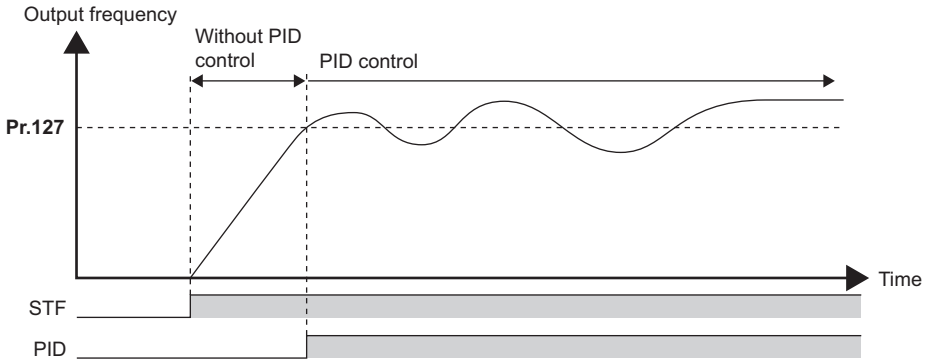

◆Selection of action at a communication error and SLEEP function stop selection (FUP signal, FDN signal,Y48 signal, Pr.554)

- Using **Pr.554 PID signal operation selection**, set the action when the measured value input exceeds the upper limit **(Pr.131 PID upper limit)** or lower limit **(Pr.132 PID lower limit)**, or when the deviation input exceeds the permissible value **(Pr.553 PID deviation limit)**.
- Choose whether to output the signals (FUP, FDN, Y48) only or to activate the protective function to output the inverter shutoff.
- The stop action when the inverter output is shut off by the SLEEP function can be selected.

Pr.554 setting	Inverter operation		
	At FUP signal, FDN signal output*1	At Y48 signal output*1	At SLEEP operation start
0 (Initial value)	Signal output only	Signal output only	Coasts to stop
1	Signal output + output shutoff (E.PID)		
2	Signal output only	Signal output + output shutoff (E.PID)	
3	Signal output + output shutoff (E.PID)		
10	Signal output only	Signal output only	Deceleration stop
11	Signal output + output shutoff (E.PID)		
12	Signal output only	Signal output + output shutoff (E.PID)	
13	Signal output + output shutoff (E.PID)		

*1 When each of **Pr.131, Pr.132 and Pr.553** corresponding to each of the FUP, FDN and Y48 signals is set to "9999" (function not activated), signal output and protective function are disabled.

◆PID output suspension function (SLEEP function) (SLEEP signal, Pr.575 to Pr.577)

- When a status where the output frequency after PID calculation is less than **Pr.576 Output interruption detection level** has continued for the time set in **Pr.575 Output interruption detection time** or longer, inverter running is suspended. This allows the amount of energy consumed in the inefficient low-speed range to be reduced.
- When the deviation (for instance, the set point - measured value) reaches the PID output shutoff release level (**Pr.577** setting value -1000%) while the PID output suspension function is activated, the PID output suspension function is released, and PID control operation is automatically restarted.
- Whether to allow motor to coast to a stop or perform a deceleration stop when SLEEP operation is started can be selected using **Pr.554**.
- While the PID output suspension function is activated, the PID output interruption signal (SLEEP) is output. During this time, the inverter running signal (RUN) turns OFF and the During PID control activated signal (PID) turns ON.
- For the terminal used for the SLEEP signal, set "70 (positive logic)" or "170 (negative logic)" in any of **Pr.190 to Pr.196 (output terminal function selection)**.

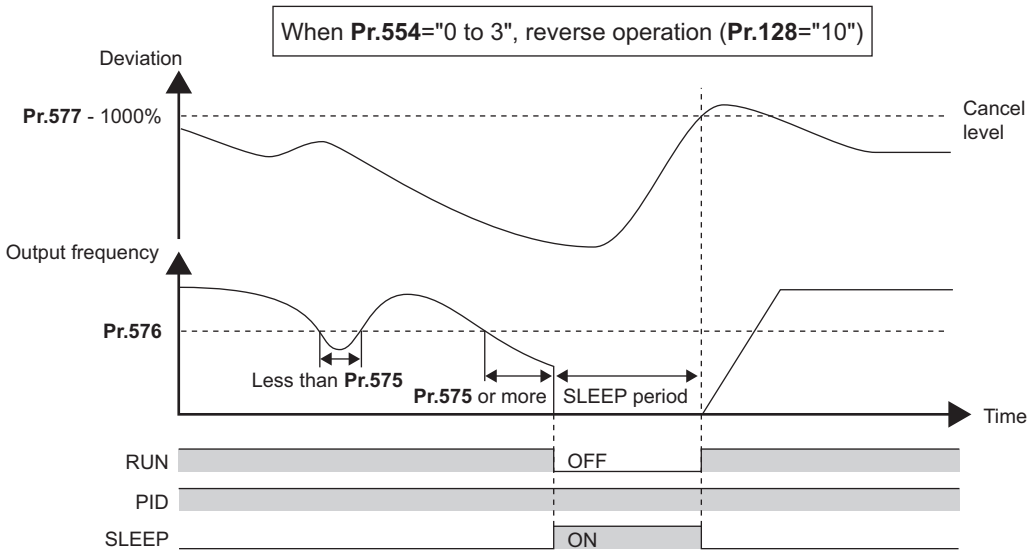

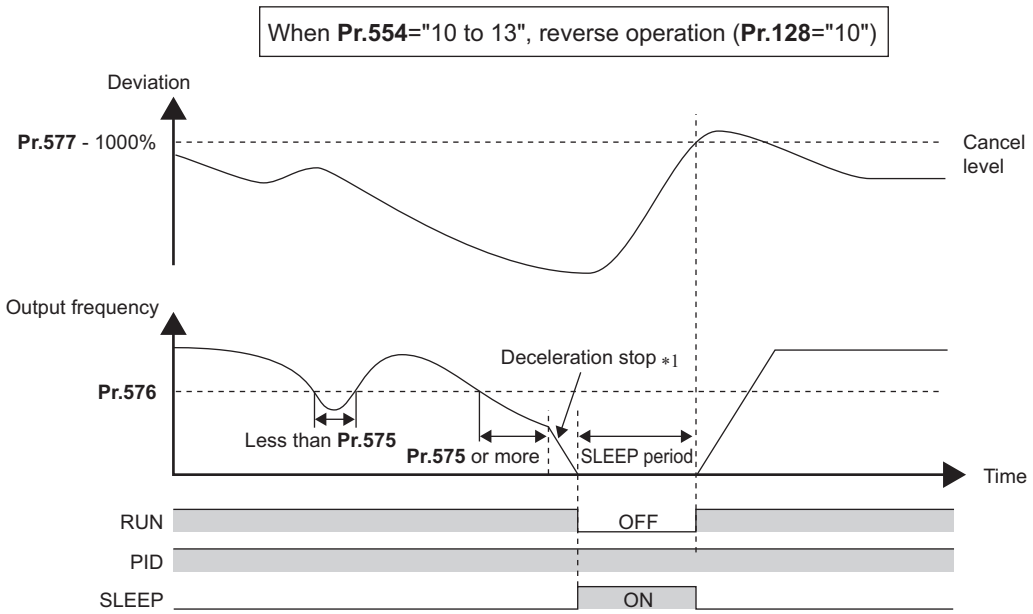

*1 When the PID output shutoff release level is reached during a deceleration stop, output shutoff is released, operation is re-accelerated and PID control is continued. During deceleration **Pr.576 Output interruption detection level** is invalid.

◆Integral stop selection at limited frequency (Pr.1015)

- The operation for the integral term can be selected when the frequency is restricted by the upper/lower limit, or the manipulated amount is limited to ±100% during PID control.
- The operation during output shutoff can be selected for the integral term using the PID output suspension function (SLEEP function).

Pr.1015 setting	Operation at limited frequency	Operation during output interruption
0 (initial value)	Integral stop	Integral clear
1	Integral continuation	Integral clear
10	Integral stop	Integral stop
11	Integral continuation	Integral stop

◆PID monitor function

- This function displays the PID control set point, measured value and deviation on the operation panel, and can output these from the terminals FM, AM and CA.
- An integral value indicating a negative % can be displayed on the deviation monitor. 0% is displayed as 1000. (These values cannot be output on the deviation monitor from terminals FM and CA.)
- Set the following values to **Pr.52 Operation panel main monitor selection**, **Pr.774 to Pr.776 (Operation panel monitor selection), Pr.992 Operation panel setting dial push monitor selection, Pr.54 FM/CA terminal function selection** and **Pr.158 AM terminal function selection** for each monitor.

<table>
<tr><th rowspan="2">Parameter settings</th><th rowspan="2">Monitor description</th><th rowspan="2">Minimum increment</th><th colspan="3">Monitor range</th><th rowspan="2">Remarks</th></tr>
<tr><th>Terminal FM/CA</th><th>Terminal AM</th><th>Operation panel</th></tr>
<tr><td>52</td><td>PID set point</td><td rowspan="2">0.1%</td><td colspan="3" rowspan="2">0 to 100%*1</td><td rowspan="3">"0" is displayed at all times when PID control is based in deviation input.</td></tr>
<tr><td>92</td><td>Second PID set point</td></tr>
<tr><td>53</td><td>PID measured value</td><td rowspan="2">0.1%</td><td colspan="3" rowspan="2">0 to 100%*1</td></tr>
<tr><td>93</td><td>Second PID measured value</td></tr>
<tr><td>67</td><td>PID measured value 2</td><td rowspan="2">0.1%</td><td colspan="3" rowspan="2">0 to 100%*1</td><td rowspan="2">The measured value is also displayed when PID control is invalid.
"0" is displayed at all times when PID control is based in deviation input.</td></tr>
<tr><td>95</td><td>Second PID measured value 2</td></tr>
<tr><td>54</td><td>PID deviation</td><td rowspan="2">0.1%</td><td rowspan="2">Setting not available</td><td rowspan="2">-100% to 100%*1*2</td><td rowspan="2">900% to 1100% or -100% to 100%*1</td><td rowspan="4">Using Pr.290 Monitor negative output selection, minus values can be output to the terminal AM and displayed on the operation panel.
Even if minus display is enabled, the display range is 900% to 1100% in monitors on the operation panel. (0% is offset and displayed as 1000%.)</td></tr>
<tr><td>94</td><td>Second PID deviation</td></tr>
<tr><td>91</td><td>PID manipulated variable</td><td rowspan="2">0.1%</td><td rowspan="2">Setting not available</td><td rowspan="2">-100% to 100%*2</td><td rowspan="2">900% to 1100% or -100% to 100%</td></tr>
<tr><td>96</td><td>Second PID manipulated variable</td></tr>
</table>

*1 When **C42(Pr.934)** and **C44(Pr.935)** are set, the minimum increment changes from unit % to no unit, and the monitor range can be changed. (Refer to page 399.)

*2 When the minus value display is set disabled using **Pr.290**, the terminal AM output becomes "0".

◆Adjustment procedure

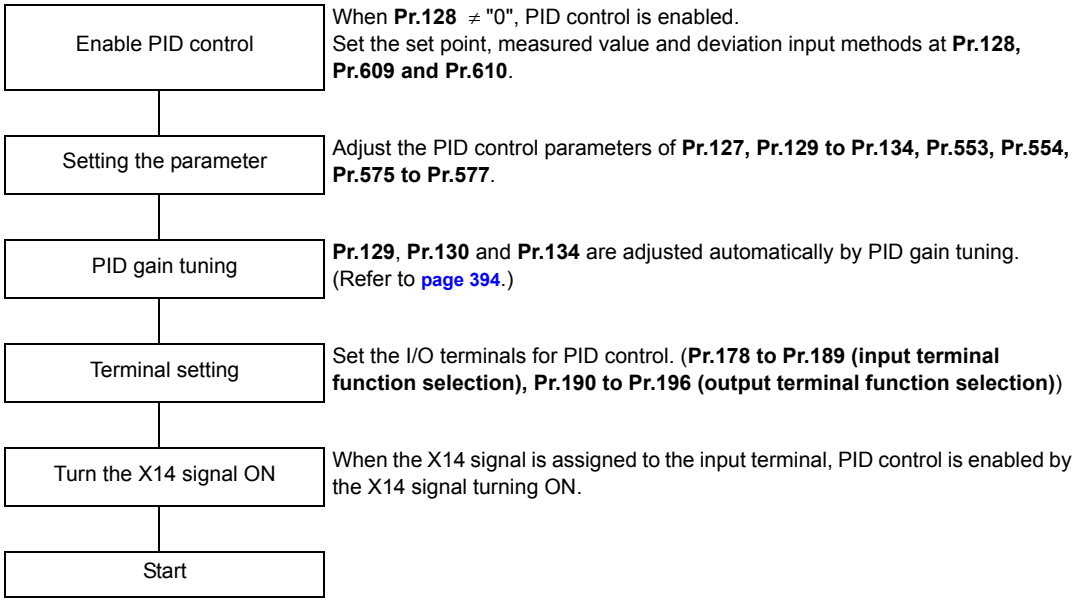

◆Calibration example

Adjust room temperature to 25°C by PID control using a detector that outputs 4 mA at 0°C and 20 mA at 50°C.)

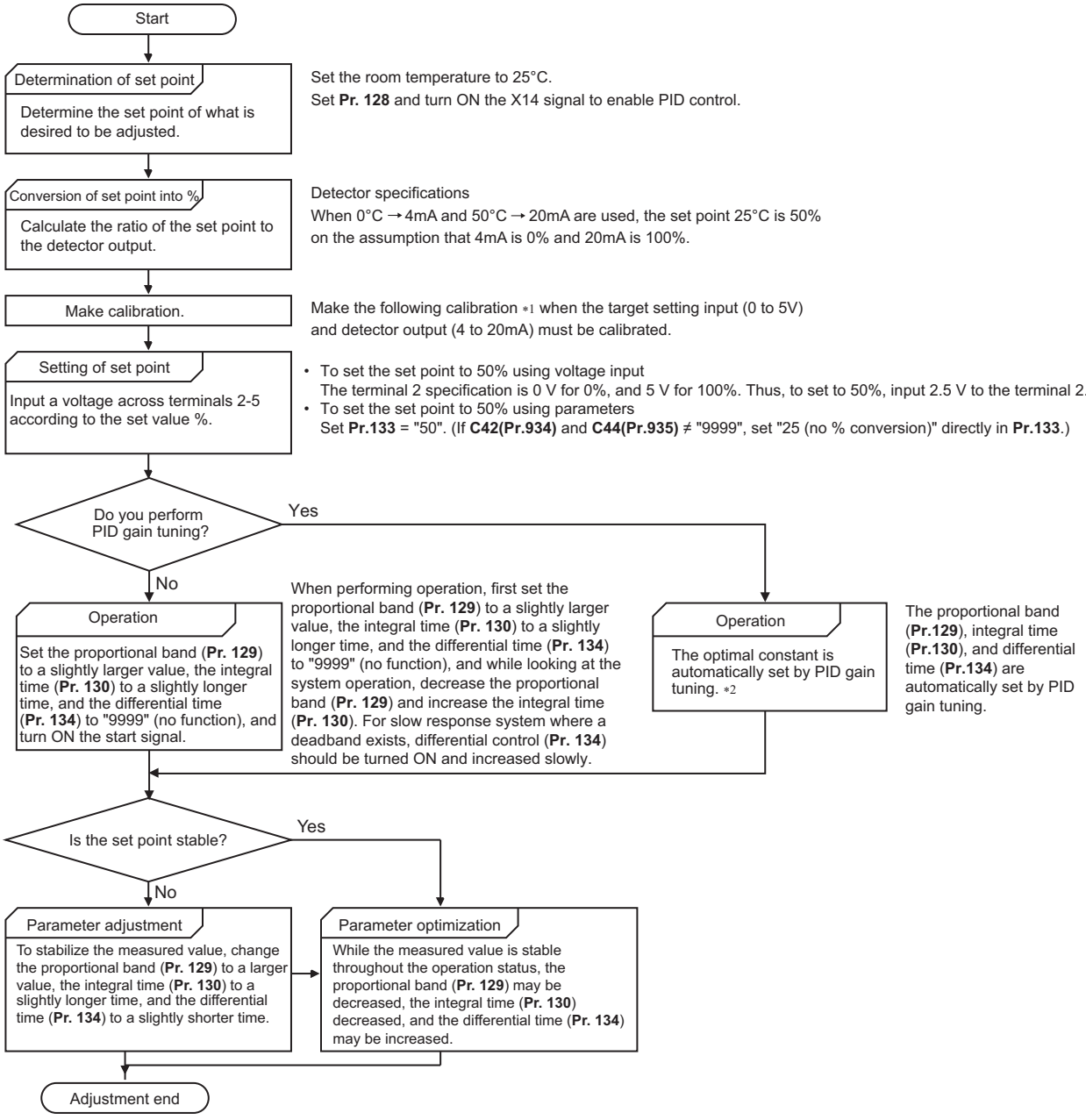

*1 When calibration is required
Calibrate detector output and set point input by **Pr.125, C2 (Pr.902) to C4 (Pr.903)** (terminal 2) or **Pr.126, C5 (Pr.904) to C7 (Pr.905)** (terminal 4). (Refer to page 314.)
When both **C42 (Pr.934) and C44 (Pr.935)** are other than "9999", calibrate the detector output and set point input by **Pr.934 and Pr.935** (terminal 4). (Refer to page 399.)
Make calibration in the PU operation mode during an inverter stop.

*2 For the PID gain tuning, refer to page 394.

- Calibrating set point input

(Example: To enter the set point on terminal 2)

1) Apply the input (for example, 0 V) of set point setting 0% across terminals 2 and 5.
2) Using **C2 (Pr.902)**, enter the frequency (for example, 0 Hz) to be output by the inverter when the deviation is 0%.
3) Using **C3 (Pr.902)**, set the voltage value at 0%.
4) Apply the input (for example, 5 V) of set point setting 100% across terminals 2 and 5.
5) Using **Pr.125**, enter the frequency (for example, 60 Hz) to be output by the inverter when the deviation is 100%.
6) Using **C4 (Pr.903)**, set the voltage value at 100%.

NOTE

- When the set point is set at **Pr.133**, the setting frequency of **C2 (Pr.902)** is equivalent to 0% and the setting frequency of **Pr.125 (Pr.903)** is equivalent to 100%.

(A) Application parameters

- Calibrating measured value input
  1) Apply the input (for example, 4 mA) of measured value 0% across terminals 4 and 5.
  2) Perform calibration by **C6 (Pr.904)**.
  3) Apply the input (for example, 20 mA) of measured value 100% across terminals 4 and 5.
  4) Perform calibration by **C7 (Pr.905)**.

NOTE

- Set the frequencies set at **C5 (Pr.904) and Pr.126** to each of the same values set at **C2 (Pr.902) and Pr.125**.
- The display unit for analog input can be changed from "%" to "V" or "mA". (Refer to page 316.)

- The figure below shows the results of having performed the calibration above.

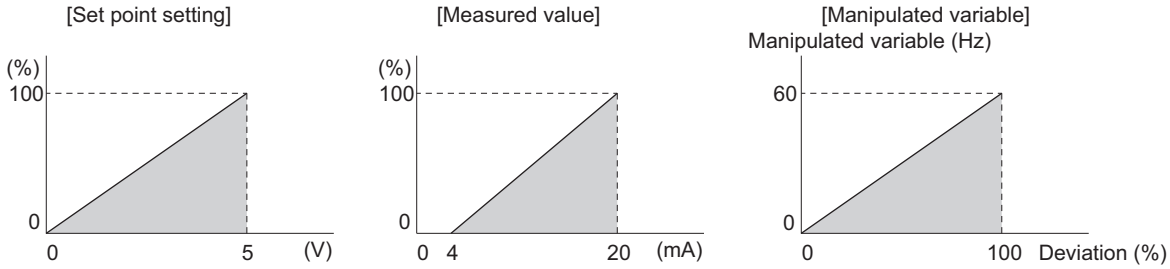

◆Setting multiple PID functions

- When the second PID function is set, two sets of PID functions can be switched for use. The PID setting is selected as shown in the table below.

Pr.128 setting (First PID setting)	Pr.753 setting (Second PID setting)	Pr.155 setting *1	RT signal	PID setting applied to the output frequency
"0" or not applied to the frequency	"0" or not applied to the frequency	—	—	Control other than PID control
"0" or not applied to the frequency	Applied to the frequency	—	—	Second PID setting
Applied to the frequency	"0" or not applied to the frequency	—	—	First PID setting
Applied to the frequency	Applied to the frequency	0	OFF	First PID setting
			ON	Second PID setting
		10	—	First PID setting

*1 While **Pr.155** = "0", the second function is enabled immediately after RT signal turns ON. While **Pr.155** = "10", the second function is enabled only during constant speed operation when RT signal turns ON. (Refer to page 333 for the details.)

- The second PID function parameters and signals function in the same way as the following parameters and signals of the first PID function. Refer to the first PID function when setting the second PID functions.

Classification	First PID function parameters		Second PID function parameters	
	Pr.	Name	Pr.	Name
Parameter	127	PID control automatic switchover frequency	754	Second PID control automatic switchover frequency
	128	PID action selection	753	Second PID action selection
	129	PID proportional band	756	Second PID proportional band
	130	PID integral time	757	Second PID integral time
	131	PID upper limit	1143	Second PID upper limit
	132	PID lower limit	1144	Second PID lower limit
	133	PID action set point	755	Second PID action set point
	134	PID differential time	758	Second PID differential time
	553	PID deviation limit	1145	Second PID deviation limit
	554	PID signal operation selection	1146	Second PID signal operation selection
	575	Output interruption detection time	1147	Second output interruption detection time
	576	Output interruption detection level	1148	Second output interruption detection level
	577	Output interruption cancel level	1149	Second output interruption cancel level
	609	PID set point/deviation input selection	1140	Second PID set point/deviation input selection
	610	PID measured value input selection	1141	Second PID measured value input selection

Classification	First PID function parameters		Second PID function parameters	
	signal	Name	signal	Name
Input signal	X14	PID control valid terminal	X80	Second PID control valid terminal
	X64	PID forward/reverse action switchover	X79	Second PID forward/reverse action switchover
	X72	PID integral value reset	X73	Second PID P control switchover
Output signal	FUP	PID upper limit	FUP2	Second PID upper limit
	FDN	PID lower limit	FDN2	Second PID lower limit
	RL	PID forward/reverse rotation output	RL2	Second PID forward/reverse rotation output
	PID	During PID control activated	PID2	Second During PID control activated
	SLEEP	PID output interruption	SLEEP2	During second PID output shutoff
	Y48	PID deviation limit	Y205	Second PID deviation limit

NOTE

- Even if the X14 signal is ON, PID control is stopped and multi-speed or JOG operation is performed when the RH, RM, RL, or REX signal (multi-speed operation) or JOG signal (JOG operation) is input.
- PID control is invalid under the following settings.
  Pr.79 Operation mode selection = "6" (Switchover mode)
- Note that input to the terminal 1 is added to the terminals 2 and 4 inputs. For example when **Pr.128** = "20 or 21", the terminal 1 input is considered as a set point and added to the set point of the terminal 2.
- To use terminal 4 and 1 inputs in PID control, set "0" (initial value) to **Pr.858 Terminal 4 function assignment** and **Pr.868 Terminal 1 function assignment**. When a value other than "0", PID control is invalid.
- Changing the terminal assignment using **Pr.178 to Pr.189 or Pr.190 to Pr.196** may affect other functions. Set parameters after confirming the function of each terminal.
- When PID control is selected, the minimum frequency becomes the frequency of **Pr.902** and the maximum frequency becomes the frequency of **Pr.903**.
  (The **Pr.1 Maximum frequency** and **Pr.2 Minimum frequency** settings also are valid.)
- During PID operation, the remote operation function is invalid.
- When control is switched to PID control during normal operation, the frequency during that operation is not carried over, and the value resulting from PID calculation referenced to 0 Hz becomes the command frequency.

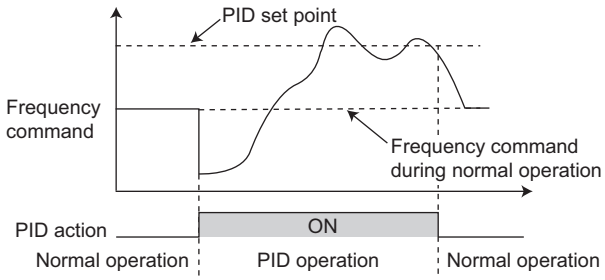

Operation when control is switched to PID control during normal operation

Parameters referred to

Pr.59 Remote function selection page 194
Pr.73 Analog input selection page 306
Pr.79 Operation mode selection page 200
Pr.178 to Pr.189 (input terminal function selection) page 329
Pr.190 to Pr.196 (output terminal function selection) page 288
Pr.290 Monitor negative output selection page 273
C2 (Pr.902) to C7 (Pr.905) Frequency setting voltage (current) bias/gain page 314

5.11.6 PID gain tuning

Changing the PID control manipulated amount and measuring the PID control response enable automatic setting of the constant optimal for PID control.
For tuning, use the step response method or the limit cycle method.

Pr.	Name	Initial value	Setting range	Description
1211 A690	**PID gain tuning timeout time**	100 s	1 to 9999 s	Set the time after the PID gain tuning starts until a timeout error occurs.
1212 A691	**Step manipulated amount**	1000%	900 to 1100%	Set the step manipulated amount when using the step response method to perform the PID gain tuning.
1213 A692	**Step responding sampling cycle**	1 s	0.01 to 600 s	Set the cycle for sampling of measurement values when using the step response method to perform the PID gain tuning.
1214 A693	**Timeout time after the maximum slope**	10 s	1 to 9999 s	Set the time after the measurement of the maximum slope until the completion of the tuning when using the step response method to perform the PID gain tuning.
1215 A694	**Limit cycle output upper limit**	1100%	900 to 1100%	Set the upper limit value of the two-position output when using the limit cycle method to perform the PID gain tuning.
1216 A695	**Limit cycle output lower limit**	1000%	900 to 1100%	Set the lower limit value of the two-position output when using the limit cycle method to perform the PID gain tuning.
1217 A696	**Limit cycle hysteresis**	1%	0.1 to 10%	Set the hysteresis of the set point when using the limit cycle method to perform the PID gain tuning.
1218 A697	**PID gain tuning setting**	0	0, 100 to 102, 111, 112, 121, 122, 200 to 202, 211, 212, 221, 222	Select the target loop, method, and control adjustment method for the PID gain tuning.
1219 A698	**PID gain tuning start/ status**	0	0	PID gain tuning function disabled
			1	PID gain tuning start
			2	During PID gain tuning (read only)
			8	PID gain tuning forced end
			9, 90 to 96	Tuning error (read only)

◆Step response method

- In the step response method, the manipulated amount is changed step by step for the real system. From the change in the measured values, the maximum slope (R) and the equivalent waste time (L) are calculated to determine each constant.

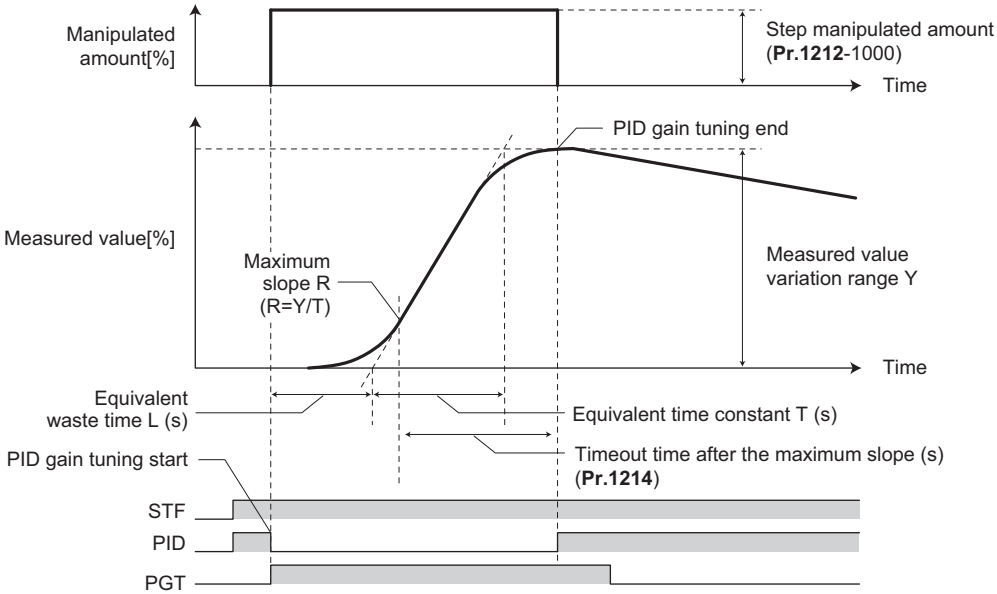

- The step manipulated amount (**Pr.1212** - 1000) is added to the present manipulated amount.
- The measured value is taken for every sampling cycle of step response (**Pr.1213**). From the variation between the measured values (Y) and the time (t), the maximum slope (R) is calculated.

- The measurement ends when the timeout time after the maximum slope (**Pr.1214**) elapsed after the maximum slope is obtained.
- After the integral term is cleared, PID control is performed with the constant to which the change has been applied (the constant used before PID gain tuning when a fault occurs).

◆Limit cycle method

- In the limit cycle method, the two-position ON/OFF operation is performed three times for output of the manipulated amount for the real system. From the vibration waveform data of the measured values, the vibration amplitude (Xc) and the vibration cycle (Tc) are measured. Based on the measured values, each constant is determined.
- In the limit cycle method, less influence of the noise of the measured values is given as compared in the step response method, and a stable tuning result can be obtained.

Example: Measured value ≤ set point (reverse action)

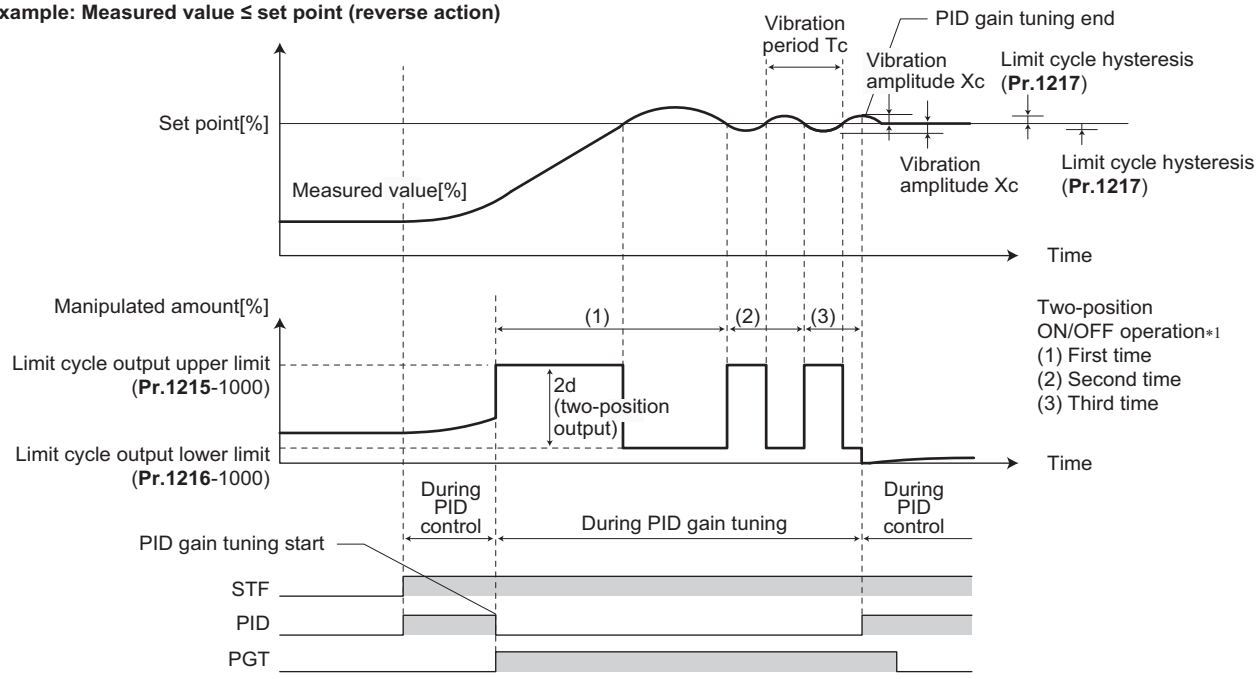

*1 Details of the two-position ON/OFF operation

PID control operation	Initial output of the manipulated amount	Two-position ON/OFF operation
Reverse action	When measured value ≤ set point Manipulated amount = Upper limit of the output (**Pr.1215**-1000) When measured value > set point Manipulated amount = Lower limit of the output (**Pr.1216**-1000)	Using measured value ≥ set point + hysteresis (**Pr.1217**) Manipulated amount = Lower limit of the output (**Pr.1216**-1000) Using measured value ≤ set point - hysteresis (**Pr.1217**) Manipulated amount = Upper limit of the output (**Pr.1215**-1000)
Forward action	When measured value ≤ set point Manipulated amount = Lower limit of the output (**Pr.1216**-1000) When measured value > set point Manipulated amount = Upper limit of the output (**Pr.1215**-1000)	Using measured value ≥ set point + hysteresis (**Pr.1217**) Manipulated amount = Upper limit of the output (**Pr.1215**-1000) Using measured value ≤ set point - hysteresis (**Pr.1217**) Manipulated amount = Lower limit of the output (**Pr.1216**-1000)

- The manipulated amount is output at the limit cycle output upper limit (**Pr.1215** - 1000). (When measured value > set point, the manipulated amount is once output at the limit cycle lower limit (**Pr.1216** - 1000), and then after set point > measured value is achieved, the manipulated amount is output at the limit cycle output upper limit (**Pr.1215** - 1000).)
- The two-position ON/OFF operation is repeated three times. From the waveform data of the values measured for output of the second and third two-position operation, the vibration amplitude (Xc) and the vibration cycle (Tc) are measured.
- From the vibration amplitude (Xc) and the vibration cycle (Tc), the threshold sensitivity (Ku) and the threshold cycle (Tu) are calculated.
- Each constant is calculated using a formula depending on the **Pr.1218** setting, and PID gain tuning is finished.
- After the integral term is cleared, PID control is performed with the constant to which the change has been applied (the constant used before PID gain tuning when a fault occurs).

NOTE

- Confirm that the measured values are stable when performing PID gain tuning with the step response method. When the measured values are unstable, the tuning result may not be accurate.
- Accurate measurement of the maximum slope may not be achieved if the **Pr.1213** setting is small in the step response method.

◆PID gain tuning operation setting (Pr.1218)

- Set the PID gain tuning operation in this parameter. The digit in the hundreds place represents the target PID loop. The digit in the tens place represents the tuning method. The digit in the ones place represents the control adjustment method.

Pr.1218 setting value	Target PID	Tuning method	Control adjustment method
0 (initial value)	PID gain tuning function disabled		
100	First PID	Step response method	P control adjustment
101			PI control adjustment
102			PID control adjustment
111		Limit cycle method (set-point control)	PI control adjustment
112			PID control adjustment
121		Limit cycle method (follow-up control)	PI control adjustment
122			PID control adjustment
200	Second PID	Step response method	P control adjustment
201			PI control adjustment
202			PID control adjustment
211		Limit cycle method (set-point control)	PI control adjustment
212			PID control adjustment
221		Limit cycle method (follow-up control)	PI control adjustment
222			PID control adjustment

◆Parameter setting for each PID gain tuning method

- Set the following parameters according to the selected tuning method (step response method / limit cycle method).

Pr.	Tuning method		Item	Description
	Step response method	Limit cycle method		
128 (753)	○	○	PID action selection	Select the PID action.
1218	○	○	PID gain tuning setting	Select the PID gain tuning operation.
1211	○	○	PID gain tuning timeout time	Set the timeout time for PID gain tuning. A timeout error occurs when the elapsed time exceeds the setting.
1212	○	-	Step manipulated amount	Set the step manipulated amount for PID gain tuning.
1213	○	-	Step responding sampling cycle	Set the cycle for sampling of measurement values for PID gain tuning.
1214	○	-	Timeout time after the maximum slope	Set the timeout time after the maximum slope measurement for PID gain tuning. The measurement for tuning is completed when the elapsed time exceeds the setting.
1215	-	○	Limit cycle output upper limit	Set the upper limit value of the two-position output for PID gain tuning.
1216	-	○	Limit cycle output lower limit	Set the lower limit value of the two-position output for PID gain tuning. (When the setting exceeds the **Pr.1215** setting, a tuning error occurs.)
1217	-	○	Limit cycle hysteresis	Set the hysteresis of the set point for PID gain tuning.

○: Parameter to set

◆Execution of PID gain tuning (Pr.1219, PGT signal)

- While the PID gain tuning function is enabled (**Pr.1218** ≠ "0"), PID gain tuning is started when any of the following operations is performed during PID control.
  - Turn ON the PID gain tuning start/forced end signal (PGT).
  - Set **Pr.1219 PID gain tuning start/status** = "1".
  - Select the PID gain tuning start (1.RUN) in the function menu on the operation panel (FR-DU08).

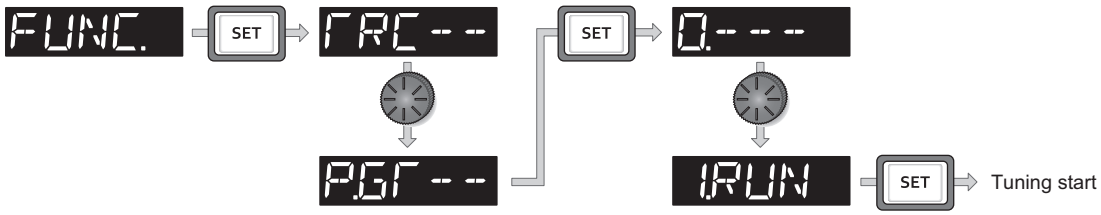

- To use the PGT signal, set "81" in any of **Pr.178 to Pr.189 (input terminal function selection)** to assign the function to an input terminal.
- The PID gain tuning status can be checked with the read value of **Pr.1219** or the PID gain tuning status monitor. The PID gain tuning status monitor is displayed instead of the output voltage monitor.

Status monitor	PID gain tuning status
2	During tuning
3	Tuning completed
8	Tuning forced end

- When PID gain tuning is completed, the following parameters are automatically set.

Pr.	Name	Step response method			Limit cycle method	
		P control	PI control	PID control	PI control	PID control
129 (756)	PID proportional band	○	○	○	○	○
130 (757)	PID integral time	-	○	○	○	○
134 (758)	PID differential time	-	-	○	-	○

○: The calculation result is applied. -: "9999" is set.

- To forcibly terminate the tuning during PID gain tuning, perform any of the following operations.
  - Turn OFF the PID gain tuning start/forced end signal (PGT).
  - Set **Pr.1219 PID gain tuning start/status** = "8".
  - Select the PID gain tuning forced end (8.END) in the function menu on the operation panel (FR-DU08).
  - Turn the power supply OFF, reset the inverter, or turn OFF the start command.

NOTE

- By PID gain tuning, the settings of the PID constant parameters (**Pr.129, Pr.130, Pr.134, Pr.756 to Pr.758**) are automatically changed. Before performing PID gain tuning, record the PID constant parameter settings before tuning as required.
- PID gain tuning also requires setting of the PID upper limit (**Pr.131** or **Pr.1143**), PID lower limit (**Pr.132** or **Pr.1144**), PID deviation limit (**Pr.553** or **Pr.1145**).
- Changing the terminal assignment with **Pr.178 to Pr.189** may affect other functions. Set parameters after confirming the function of each terminal.
- By PID gain tuning, the manipulated amount is changed considerably. In some applications such as a winding machine, materials may be affected.

◆PID gain tuning error

• When the read value of **Pr.1219** or the PID gain tuning status monitor display is "9, 90 to 96", tuning has not been properly completed due to a tuning error. Remove the cause of the tuning error, and perform tuning again.

Monitor value	Error definition	Cause of tuning error	Corrective action for error
9	Termination of tuning due to activation of an inverter protective function	An inverter protective function is activated.	Remedy the cause. (Refer to page 535.)
90	Input upper limit error	The measured value is higher than the PID upper limit (**Pr.131** or **Pr.1143**).	Change the **Pr.131** or **Pr.1143** setting as appropriate.
91	Input lower limit error	The measured value is lower than the PID lower limit (**Pr.132** or **Pr.1144**).	Change the **Pr.132** or **Pr.1144** setting as appropriate.
92	Deviation limit error	The deviation exceeded the PID deviation limit (**Pr.553** or **Pr.1145**).	Change the **Pr.553** or **Pr.1145** setting as appropriate.
93	Timeout error	Tuning is not terminated within the time set in **Pr.1211** after the start of PID gain tuning.	Change the **Pr.1211** setting as appropriate.
94	Calculation error	The tuning calculation is inconsistent.	In the step response method, change the **Pr.1212** and **Pr.1213** settings as appropriate. In the limit cycle method, change the **Pr.1217** setting as appropriate.
95	Setting error	• PID control is disabled during tuning. • The PID control setting has been changed during tuning. • In the limit cycle method, the **Pr.1215** setting is equal to or lower than the **Pr.1216** setting.	• Enable PID control. • Change the **Pr.1215 and Pr.1216** settings as appropriate.
96	PID mode error	• PID gain tuning has been started during automatic switchover or pre-charge operation. • A stall prevention or regeneration avoidance operation occurred during PID gain tuning. • A condition for output shutoff by the SLEEP function was satisfied during PID gain tuning. • Frequency fluctuation occurred because of the frequency jump, maximum frequency, or minimum frequency during PID gain tuning.	Change the setting of each function as appropriate.

◆Fine adjustment after PID gain tuning

• If fine adjustment is required after completion of PID gain tuning, adjust the proportional band (**Pr.129** or **Pr.756**), integral time (**Pr.130** or **Pr.757**), and differential time (**Pr.134** or **Pr.758**).

Status of measurement values	Adjustment method
The response is fast, but vibrations are observed. 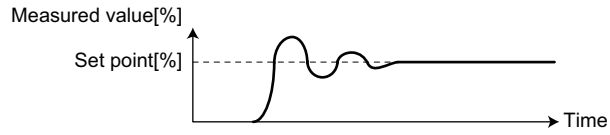	• Increase the proportional band (**Pr.129** or **Pr.756**). (Smaller proportional effect) • Increase the integral time (**Pr.130** or **Pr.757**). (Smaller integral effect)
Optimal 	—
Response is slow. 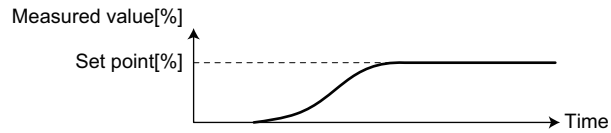	• Decrease the proportional band (**Pr.129** or **Pr.756**). (Larger proportional effect) • Decrease the integral time (**Pr.130** or **Pr.757**). (Larger integral effect)

NOTE

• When the differential operation is used, adjust the differential time (**Pr.134** or **Pr.758**) while checking the stability and the response. (Increasing the differential time makes the differential effect larger, and decreasing the differential time makes the differential effect smaller.)

5.11.7 Changing the display increment of the numerical values used in PID control

When the LCD operation panel (FR-LU08) or the parameter unit (FR-PU07) is used, the display unit of parameters and monitored items related to PID control can be changed to various units.

Pr.	Name	Initial value	Setting range	Description	
759 **A600**	**Operation mode selection**	0	0 to 43	Change the PID control-related display unit that is displayed on the LCD operation panel (FR-LU08) or the parameter unit (FR-PU07).	
			9999	Without display unit switching	
C42 **A630** **(934)**∗1	**PID display bias coefficient**	9999	0 to 500	Set the coefficient of the bias side (minimum) of measured value input.	
			9999	Displayed in %.	
C43 **A631** **(934)**∗1	**PID display bias analog value**	20%	0 to 300%	Set the converted % of the bias side (minimum) current/ voltage of measured value input.	
C44 **A632** **(935)**∗1	**PID display gain coefficient**	9999	0 to 500	Set the coefficient of the gain side (maximum) of measured value input.	
			9999	Displayed in %.	
C45 **A633** **(935)**∗1	**PID display gain analog value**	100%	0 to 300%	Set the converted % of the gain side (maximum) current/ voltage of measured value input.	
1136 **A670**	**Second PID display bias coefficient**	9999	0 to 500 9999	Refer to **C42 (934)**	Second PID control
1137 **A671**	**Second PID display bias analog value**	20%	0 to 300%	Refer to **C43 (934)**	
1138 **A672**	**Second PID display gain coefficient**	9999	0 to 500 9999	Refer to **C44 (935)**	
1139 **A673**	**Second PID display gain analog value**	100%	0 to 300%	Refer to **C45 (935)**	
1142 **A640**	**Second PID unit selection**	9999	0 to 43, 9999	Refer to **Pr.759**	

∗1 The parameter number in parentheses is the one for use with the LCD operation panel and the parameter unit.

◆Calibration of PID display bias and gain(C42 (Pr.934) to C45 (Pr.935))

- When both **C42 (Pr.934) and C44 (Pr.935)** ≠ "9999", the bias and gain values for the set point, measured value and deviation in PID control can be calibrated.
- "Bias"/"gain" function can adjust the relation between PID displayed coefficient and measured value input signal that is externally input.
  Examples of these measured value input signals are 0 to 5 VDC, 0 to 10 VDC, or 4 to 2 mADC.
- Set the value that is displayed when the PID measured value (control amount) is 0% to **C42 (Pr.934)** and the value that is displayed when the PID measured value (control amount) is 100% to **C44 (Pr.935)**.
- When both of **C42 (Pr.934) and C44 (Pr.935)** ≠"9999" and **Pr.133** is set as the set point, the setting of **C42 (Pr.934)** is treated as 0%, and **C44 (Pr.935)** as 100%.

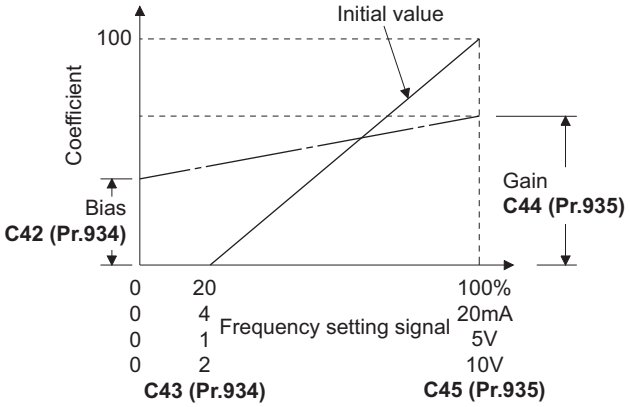

(A) Application parameters

- There are three methods to adjust the PID display bias/gain.
  (a) Method to adjust any point by application of a current (voltage) to the measured value input terminal
  (b) Method to adjust any point without application of a current (voltage) to the measured value input terminal
  (c) Method to adjust only the display coefficient without adjustment of current (voltage)

(Refer to page 314 for details on (a) to (c), and make the necessary adjustments by considering **C7 (Pr.905)** as **C45 (Pr.935)** and **Pr.126** as **C44 (Pr.935)**.

NOTE

- Always calibrate the input after changing the voltage/current input specification with **Pr.73 and Pr.267**, and the voltage/current input selection switch.

- Take caution when the following condition is satisfied because the inverter recognizes the deviation value as negative (positive) value even though a positive (negative) deviation is given: **Pr.934** (PID bias coefficient) > **Pr.935** (PID gain coefficient)
  To perform a reverse action, set **Pr.128 PID action selection** to forward action. Alternatively, to perform a forward action, set **Pr.128** to reverse action.

Pr.934 < Pr.935 (normal setting)		**Pr.934 ≥ Pr.935**	
Reverse action	Reverse action setting to **Pr.128**	Reverse action	Forward action setting to **Pr.128**
Forward action	Forward action setting to **Pr.128**	Forward action	Reverse action setting to **Pr.128**
PID output shutoff release level	**Pr.577** -1000	PID output shutoff release level	1000 -**Pr.577**

(Example) Set the following: **Pr.934**="500", 20% (4 mA is applied), **Pr.935**="100", 100% (20 mA is applied).
When the set point=400 and the measured value=360, the deviation is +40 (>0), but the inverter recognizes the deviation as -10% (<0). Because of this, operation amount does not increase in the reverse operation setting.
The operation amount increases when the forward operation is set.
To perform PID output shutoff release at deviation of +40 or higher, set **Pr.577**="960".

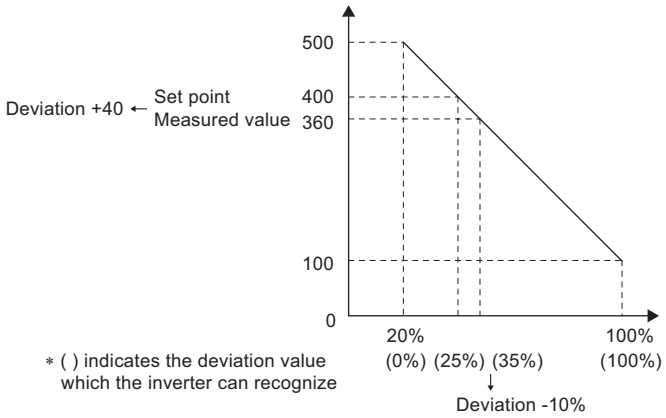

- The display of the following parameters is changed according to the **C42 (Pr.934))**, **C44 (Pr.935)**, **Pr.1136, and Pr1138** settings.

Pr.	Name
131	PID upper limit
132	PID lower limit
133	PID action set point
553	PID deviation limit
577	Output interruption cancel level
761	Pre-charge ending level
763	Pre-charge upper detection level

Pr.	Name
1143	Second PID upper limit
1144	Second PID lower limit
755	Second PID action set point
1145	Second PID deviation limit
1149	Second output interruption cancel level
766	Second pre-charge ending level
768	Second pre-charge upper detection level

◆Changing the PID display coefficient of the LCD operation panel (FR-LU08), parameter unit (FR-PU07) (Pr.759)

• Use **Pr.759 PID unit selection** to change the unit displayed on FR-LU08 or FR-PU07. For the coefficient set in **C42(Pr.934) to C44(Pr.935)**, the displayed units can be changed to the following units.

Pr.759 setting	Displayed unit	Unit name
9999	%	%
0	—	Not displayed
1	K	Kelvin
2	C	Degree Celsius
3	F	Degree Fahrenheit
4	PSI	Pound-force per Square Inch
5	MPa	Mega Pascal
6	kPa	Kilo Pascal
7	Pa	Pascal
8	bar	Bar
9	mbr	Millibar
10	GPH	Gallon per Hour
11	GPM	Gallon per Minute
12	GPS	Gallon per Second
13	L/H	Liter per Hour
14	L/M	Liter per Minute
15	L/S	Liter per Second
16	CFH	Cubic Feet per Hour
17	CFM	Cubic Feet per Minute
18	CFS	Cubic Feet per Second
19	CMH	Cubic Meter per Hour
20	CMM	Cubic Meter per Minute
21	CMS	Cubic Meter per Second

Pr.759 setting	Displayed unit	Unit name
22	ftM	Feet per Minute
23	ftS	Feet per Second
24	m/M	Meter per Minute
25	m/S	Meter per Second
26	lbH	Pound per Hour
27	lbM	Pound per Minute
28	lbS	Pound per Second
29	iWC	Inch Water Column
30	iWG	Inch Water Gauge
31	fWG	Feet of Water Gauge
32	mWG	Meter of Water Gauge
33	iHg	Inches of Mercury
34	mHg	Millimeters of Mercury
35	kgH	Kilograms per Hour
36	kgM	Kilograms per Minute
37	kgS	Kilograms per Second
38	ppm	Pulse per Minute
39	pps	Pulse per Second
40	kW	Kilo Watt
41	hp	Horse Power
42	Hz	Hertz
43	rpm	Revolutions per Minute

5.11.8 PID pre-charge function

This function drives the motor at a certain speed before starting PID control. This function is useful for a pump with a long hose. Without this function, PID control would start before the pump is filled with water, and proper control would not be performed.

Pr.	Name	Initial value	Setting range	Description	
760 A616	**Pre-charge fault selection**	0	0	Fault indication with output shutoff immediately after pre-charge fault occurs.	
			1	Fault indication with deceleration stop after pre-charge fault occurs.	
761 A617	**Pre-charge ending level**	9999	0 to 100%	Set the measured amount to end the pre-charge operation.	
			9999	Without pre-charge ending level	
762 A618	**Pre-charge ending time**	9999	0 to 3600 s	Set the time to end the pre-charge operation.	
			9999	Without pre-charge ending time	
763 A619	**Pre-charge upper detection level**	9999	0 to 100%	Set the upper limit for the pre-charged amount. A pre-charge fault occurs when the measured value exceeds the setting during pre-charging.	
			9999	Without pre-charge upper limit level	
764 A620	**Pre-charge time limit**	9999	0 to 3600 s	Set the time limit for the pre-charged amount. A pre-charge fault occurs when the pre-charge time exceeds the setting.	
			9999	Without pre-charge time limit	
1132 A626	**Pre-charge change increment amount**	9999	0 to 100%	Set the change increment amount per second after the automatic switchover frequency is reached. (for vertical pumps).	
			9999	Constant-speed operation after the automatic switchover frequency is reached (for horizontal pumps).	
765 A656	**Second pre-charge fault selection**	0	0, 1	Refer to **Pr.760**.	Set the second pre-charge function. The second pre-charge function is valid when the RT signal is ON.
766 A657	**Second pre-charge ending level**	9999	0 to 100%, 9999	Refer to **Pr.761**.	
767 A658	**Second pre-charge ending time**	9999	0 to 3600 s, 9999	Refer to **Pr.762**.	
768 A659	**Second pre-charge upper detection level**	9999	0 to 100%, 9999	Refer to **Pr.763**.	
769 A660	**Second pre-charge time limit**	9999	0 to 3600 s, 9999	Refer to **Pr.764**.	
1133 A666	**Second pre-charge change increment amount**	9999	0 to 100%, 9999	Refer to **Pr.1132**.	

◆Operation selection for the pre-charge function

- To enable the pre-charge function when PID control is enabled, set the pre-charge end conditions at **Pr.761 Pre-charge ending level** and at **Pr.762 Pre-charge ending time**, or set "77" to **Pr.178 to Pr.189 (input terminal function selection)**. When operation is started, the inverter runs at the frequency set to **Pr.127 PID control automatic switchover frequency** to enter the pre-charge state.
- Pre-charge ends and PID control starts after a pre-charge ending condition is satisfied.
- The pre-charge function is also activated at a start after release of a PID output suspension (SLEEP) state or MRS (output shutoff). The PID output suspension (SLEEP) function is not activated until the started pre-charge operation ends.
- During pre-charge operation, the During pre-charge operation (Y49) signal is output. For the terminal used for Y49 signal output, set "49 (positive logic)" or "149 (negative logic)" in any of **Pr.190 to Pr.196 (Output terminal function selection)** to assign the function.
- The pre-charge function valid/invalid settings and pre-charge ending conditions are as follows:

Pr.127 setting	Pre-charge ending condition setting			Pre-charge function	Valid pre-charge ending condition*1		
	Pr.761 setting	Pr.762 setting	X77 signal				
9999	-	-	-	Disabled	-		
Other than 9999	9999	9999	Not assigned				
			Assigned	Enabled	-	-	X77
		Other than 9999	Not assigned		-	Time	-
			Assigned		-	Time	X77
	Other than 9999	9999	Not assigned		Result	-	-
			Assigned		Result	-	X77
		Other than 9999	Not assigned		Result	Time	-
			Assigned		Result	Time	X77

*1 When two or more ends conditions are satisfied, the pre-charge operation ends by the first-satisfied condition.

NOTE

- During the pre-charge operation, it is regarded as integrated value=estimated value. The motor speed may drop shortly from the automatic switchover frequency depending on the parameter settings.
- Parameter changes and switchover to the second PID control are applied immediately. If PID control has not started when the settings were changed, PID control starts with changed settings. (If PID control has already started, these settings do not apply. If the changed settings already satisfies a condition to start PID control, the PID control starts as soon as these are changed.)
- The pre-charge also ends when PID control is set to invalid, the start command has been turned OFF, and output has been shut off.

◆Example of pre-charge operation

- When the measured amount reaches the pre-charge ending level (**Pr.761 Pre-charge ending level** ≠ "9999")
  The pre-charge operation ends when the measured value reaches the **Pr.761** setting or higher, then the PID control is performed.
  - When **Pr.1132 Pre-charge change increment amount** = "9999" (horizontal pumps)

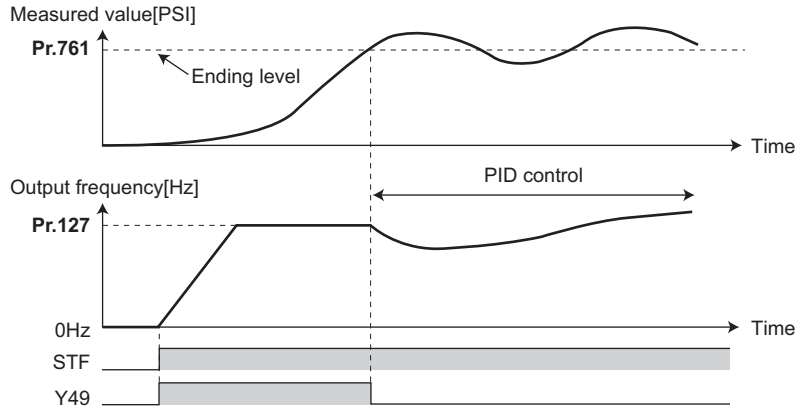

  - When **Pr.1132 Pre-charge change increment amount** ≠ "9999" (vertical pumps), PID control is performed so that the change increment amount of the set point equals the **Pr.1132** setting after the automatic switchover frequency is reached until the pre-charge ending condition is satisfied. (Although PID control is performed after the automatic switchover frequency is reached until the pre-charge ends, the status is regarded as the one during pre-charge.)

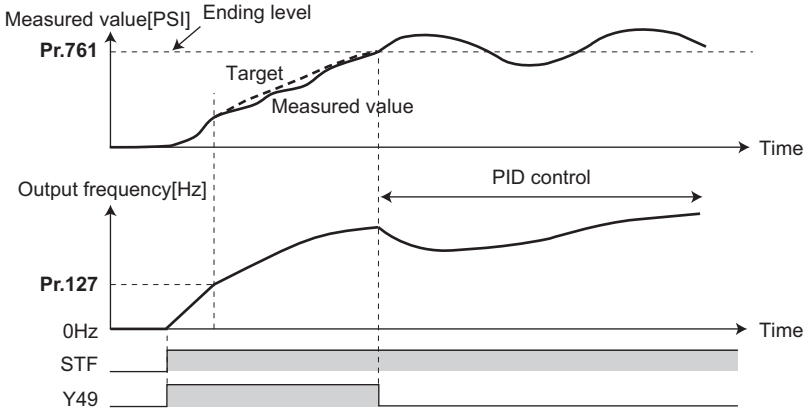

(A) Application parameters

- When the elapsed time reaches the pre-charge ending time (**Pr.762 Pre-charge ending time** ≠ "9999")
  The pre-charge operation ends when the pre-charge time reaches the **Pr.762** setting or higher, then the PID control is performed.

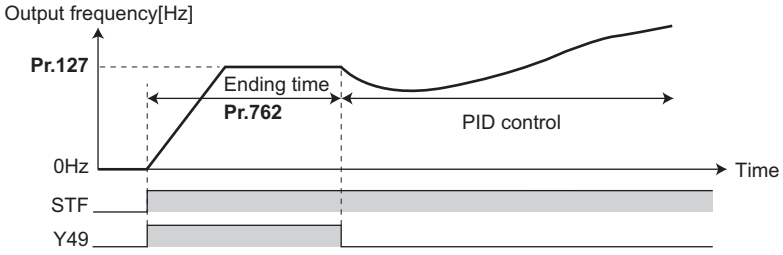

- When the signal is input to end the pre-charge operation
  When the X77 signal turns ON, the pre-charge operation ends, and the PID control starts. (If a start command is given while the X77 signal is ON, the pre-charge operation is not performed, and PID control starts.)

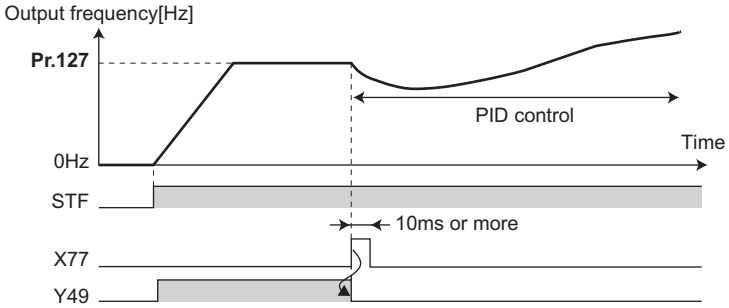

NOTE

- When the PID output suspension (SLEEP) function is in use, and the X77 signal is set to valid after this function is released, set the X77 signal to OFF after checking that the during pre-charge operation signal (Y49) is OFF.
- When the PID output suspension (SLEEP) function is in use, and PID control is to be performed immediately after this function is released, leave the X77 signal ON until PID control ends.
- When the pre-charge operation is valid, the pre-charge operation is performed at the output shutoff cancellation (MRS signal, etc.). (The pre-charge operation is also performed in the case of instantaneous power failure when the automatic restart after instantaneous power failure is valid.)
- When the control method is changed to PID control from a control with higher priority in frequency command (multi-speed setting, Jog operation, etc.), the motor is accelerated/decelerated until its speed reaches the automatic switchover frequency (**Pr.127**), and the pre-charge is performed.

◆Operation setting at pre-charge fault

- The protective function can be activated when limit values are exceeded if the time limit is set at **Pr.764 Pre-charge time limit** and the measured value limit level is set at **Pr.762 Pre-charge ending time**.
- Whether to shut off output immediately after the protective function is activated or after a deceleration stop can be selected by **Pr.760 Pre-charge fault selection**.
- When the time limit is exceeded, the Pre-charge time over (Y51) signal is output. When the measured value limit level is exceeded, the Pre-charge level over (Y53) signal is output. For the Y51 signal, **set "51 (forward action)"** or "151 (reverse action)" to **Pr.190 to Pr.196 (output terminal function selection)**, and for the Y53 signal, set "53 (forward action)" or "153 (reverse action)" in **Pr.190 to Pr.196 (output terminal function selection)** to assign the functions to terminals.

NOTE

- For **Pr.764 Pre-charge time limit**, set a value greater than **Pr.762 Pre-charge ending time**.
- For **Pr.763 Pre-charge upper detection level**, set a value greater than **Pr.761 Pre-charge ending level**.

- Example of protective function by time limit (**Pr.760** = "0")

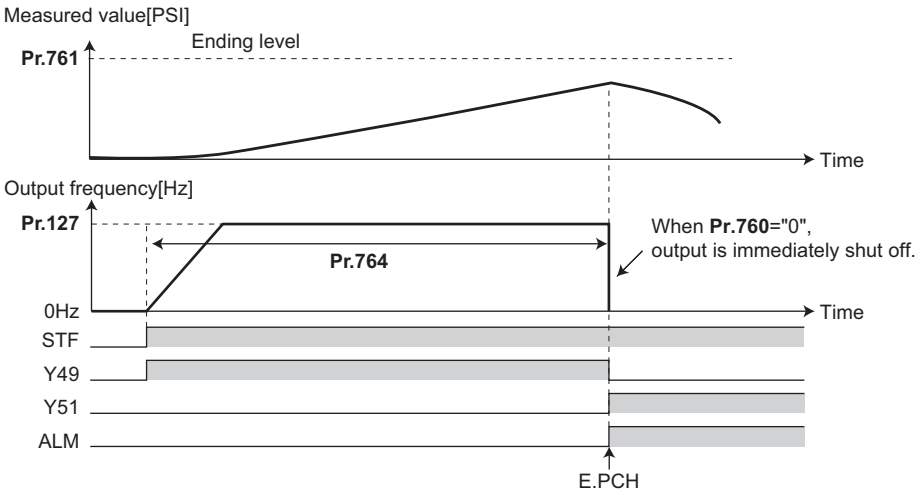

- Example of protective function measured value limit (**Pr.760** = "1")

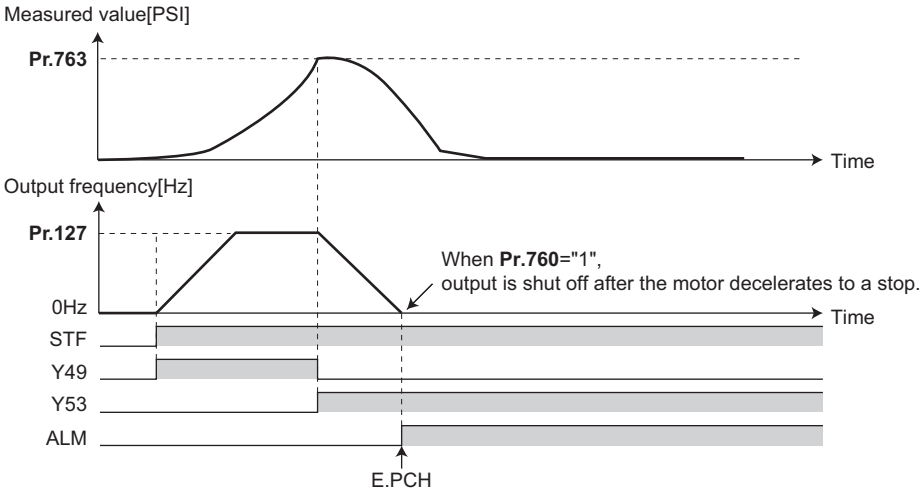

◆Setting multiple PID pre-charge functions

- When the second pre-charge function is set, two sets of pre-charge functions can be switched for use. The second pre-charge function is enabled by turning ON the RT signal.
- The second pre-charge function parameters and signals function in the same way as the following parameters and signals of the first pre-charge function. Refer to the first pre-charge function when setting the second pre-charge functions.

Classification	First pre-charge function parameters		Second pre-charge function parameters	
	Pr.	Name	Pr.	Name
Parameter	760	Pre-charge fault selection	765	Second pre-charge fault selection
	761	Pre-charge ending level	766	Second pre-charge ending level
	762	Pre-charge ending time	767	Second pre-charge ending time
	763	Pre-charge upper detection level	768	Second pre-charge upper detection level
	764	Pre-charge time limit	769	Second pre-charge time limit
	1132	Pre-charge change increment amount	1133	Second pre-charge change increment amount

Classification	First pre-charge function parameters		Second pre-charge function parameters	
	Signal	Name	Signal	Name
Input signal	X77	Pre-charge end command	X78	Second pre-charge end command
Output signal	Y49	During pre-charge operation	Y50	During second pre-charge operation
	Y51	Pre-charge time over	Y52	Second pre-charge time over
	Y53	Pre-charge level over	Y54	Second pre-charge level over

NOTE

- The second PID pre-charge function is valid also when the first pre-charge function is set to invalid and the second pre-charge function is set.
- When "10" (second function enabled only during constant-speed operation) is set to **Pr.155**, the second PID function is not selected even if the RT signal turns ON.

5.11.9 Multi-pump function (Advanced PID function)

PID control function can adjust the volume of water, etc. by controlling pumps. When the motor output is insufficient, auxiliary motors can be driven by the commercial power supply. Up to three auxiliary motors can be connected.

Pr.	Name	Initial value		Setting range	Description
		FM	CA		
578 A400	Auxiliary motor operation selection	0		0	No auxiliary motor operation
				1 to 3	Set the number of auxiliary motors to be run.
579 A401	Motor connection function selection	0		0	Basic system
				1	Alternative system
				2	Direct system
				3	Alternative direct system
580 A402	MC switching interlock time	1 s		0 to 100 s	Set the MC switchover interlock time.
581 A403	Start waiting time	1 s		0 to 100 s	Set the time from when the MC is switched until it starts. Set this time a little longer than the MC switching time.
582 A404	Auxiliary motor connection-time deceleration time	1 s		0 to 3600 s	Used to decrease the output frequency of the inverter when a motor connection occurs. Set the deceleration time for decreasing the output frequency.
				9999	The output frequency is not decreased when a motor connection occurs.
583 A405	Auxiliary motor disconnection-time acceleration time	1 s		0 to 3600 s	Used to increase the output frequency of the inverter when a motor connection occurs. Set the acceleration time for increasing the output frequency.
				9999	The output frequency is not increased when a motor connection occurs.
584 A406	Auxiliary motor 1 starting frequency	60 Hz	50 Hz	0 to 590 Hz	Set the frequency to start the auxiliary motor.
585 A407	Auxiliary motor 2 starting frequency	60 Hz	50 Hz	0 to 590 Hz	
586 A408	Auxiliary motor 3 starting frequency	60 Hz	50 Hz	0 to 590 Hz	
587 A409	Auxiliary motor 1 stopping frequency	0 Hz		0 to 590 Hz	Set the frequency to stop the auxiliary motor.
588 A410	Auxiliary motor 2 stopping frequency	0 Hz		0 to 590 Hz	
589 A411	Auxiliary motor 3 stopping frequency	0 Hz		0 to 590 Hz	
590 A412	Auxiliary motor start detection time	5 s		0 to 3600 s	Set the delay time until the auxiliary motor is started.
591 A413	Auxiliary motor stop detection time	5 s		0 to 3600 s	Set the delay time until the auxiliary motor is stopped.

POINT

- Refer to page 378 to set PID control.
- When using the SLEEP function, refer to page 388 to set the function.

◆Multi-pump function control method

- Use **Pr.579 Motor connection function selection** to select the control method for the multi-pump function. Use **Pr.578 Auxiliary motor operation selection** to set the number of auxiliary motors.

Pr.579 setting	Control method	Description
0	Basic system	The motor driven by the inverter is always fixed. Commercial power supply operation of auxiliary motors is available by turning on and off the MC between the power supply and the motor depending on the output frequency of the inverter.
1	Alternative system	The motor driven by the inverter is fixed during operation. Commercial power supply operation of auxiliary motors is available by turning on and off the MC between the power supply and the motor depending on the output frequency of the inverter. When output is shut off by the SLEEP function, the MC between the inverter and the motor is switched to switch the motor to be driven by the inverter.
2	Direct system	When the start signal is turned ON, the motor is started by the inverter. When the conditions to start the next motor are established, MCs between the inverter and the motor and the power supply and the motor are switched to change the operation of the motor driven by the inverter to commercial power supply operation, and the next motor is started by the inverter. When conditions to stop motors are established while auxiliary motors are running, the motor started first (currently driven by the commercial power supply) is stopped first, and then the other motors are stopped.
3	Alternative direct system	When the start signal is turned ON, the motor is started by the inverter. When the conditions to start the next motor are established, MCs between the inverter and the motor and the power supply and the motor are switched to change the operation of the motor driven by the inverter to commercial power supply operation, and the next motor is started by the inverter. When conditions to stop motors are established while auxiliary motors are running, the motor driven by the inverter is decelerated to stop, and operation of a motor currently driven by the commercial power supply is switched to the inverter-driven operation after frequency search. To perform frequency search when the motor operation is switched from commercial power supply operation to inverter-driven operation, set **Pr.57 Restart coasting time** ≠ "9999".

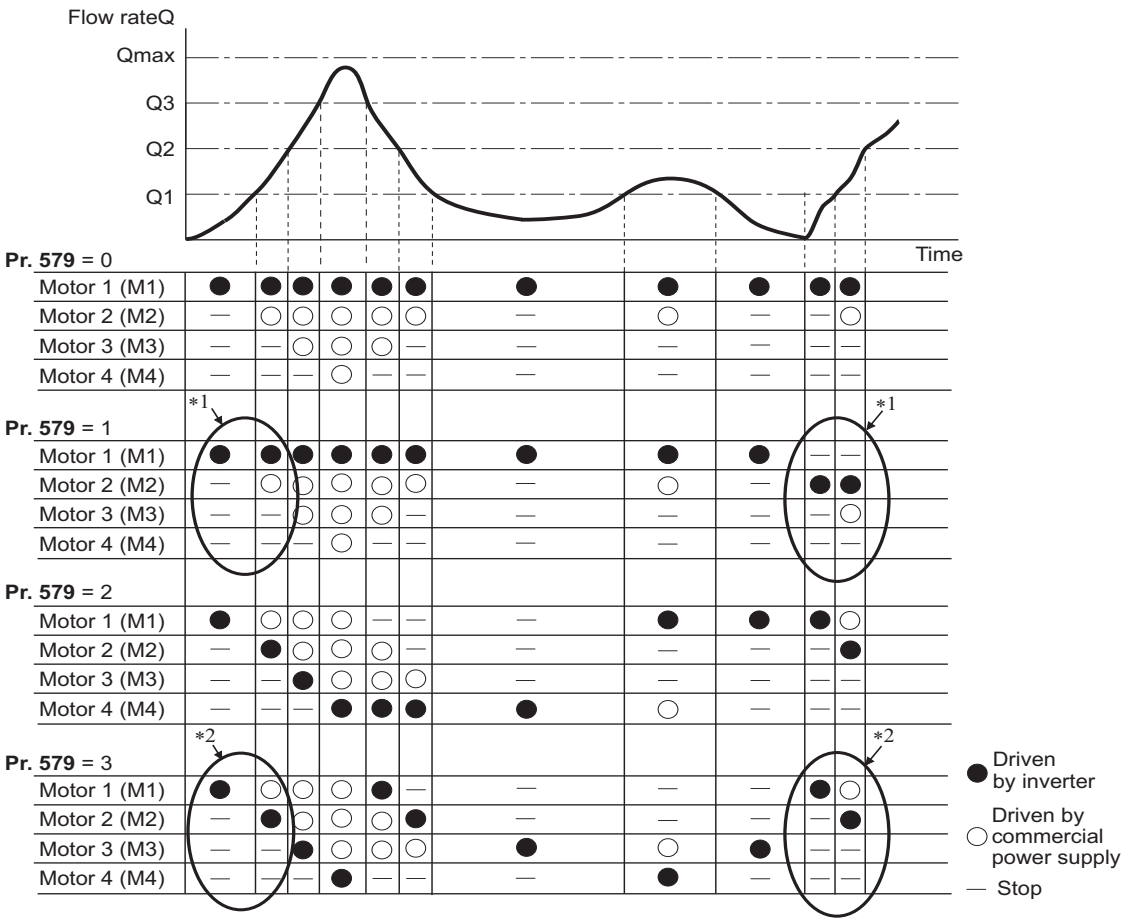

*1 The starting order of motors is M2 → M3 → M1 if the previous order was M1 → M2 → M3.

*2 The motor starts in the order of elapsed time after completion of the previous inverter-driven operation, from the longest to the shortest. (The motor that has not been driven by the inverter for the longest time starts first.)

NOTE

- The motor 1 (M1) starts first when power is turned ON for the first time or after inverter reset.
- When the **Pr.578 or Pr.579** setting has been changed, The motor 1 (M1) starts first.

◆Connection diagram

- Basic system
  (**Pr.579**="0")
  - Sink logic
  - **Pr.183**=14
  - **Pr.185**=64
  - **Pr.194**=72
  - **Pr.193**=73
  - **Pr.194**=74

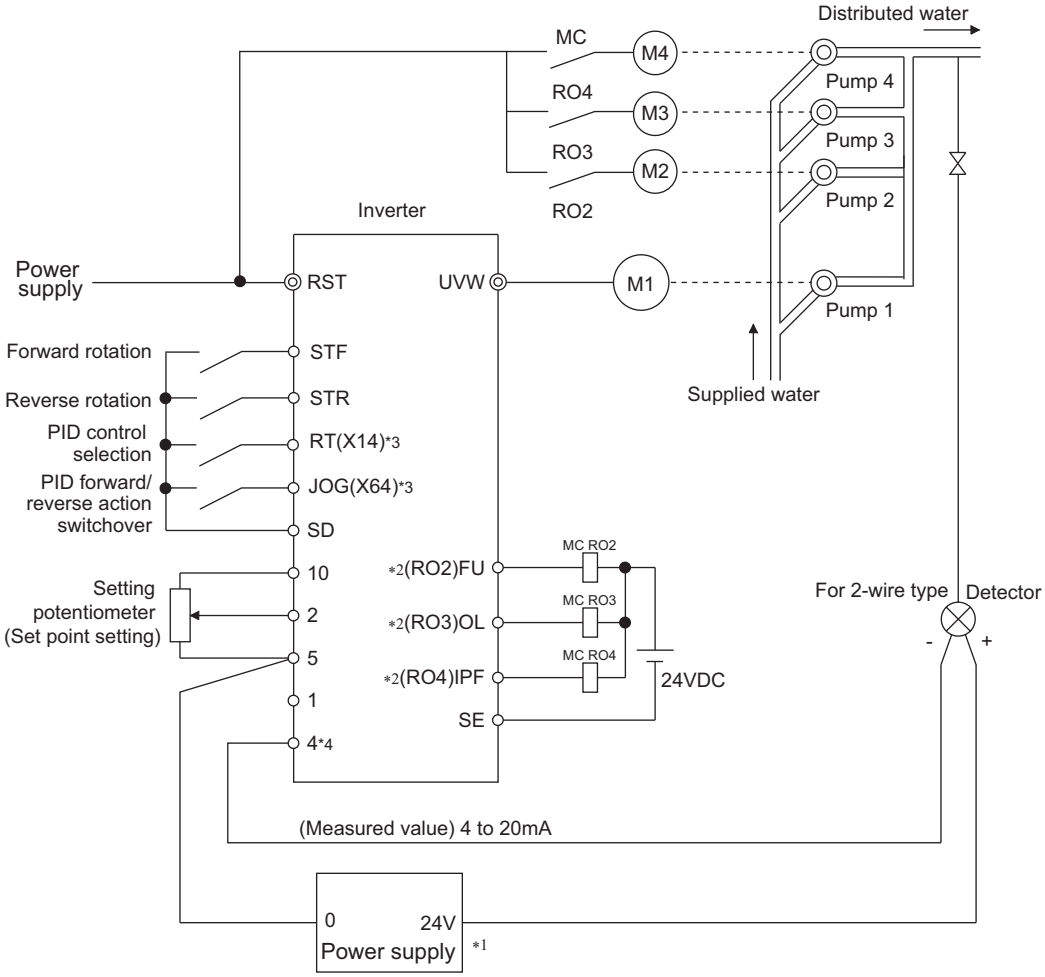

*1 Prepare the power supply in accordance with the power supply specifications of the detector.
*2 The applied output signal terminals differ by the settings of **Pr.190 to Pr.196 (output terminal function selection)**.
*3 The applied input signal terminals differ by the settings of **Pr.178 to Pr.189 (input terminal function selection)**.
*4 There is no need to input AU signal.

- Alternative system (**Pr.579**="1"), direct system (**Pr.579**="2"), alternative direct system (**Pr.579**="3")
  - Sink logic
  - **Pr.183**=14, **Pr.185**=64, **Pr.194**=75, **Pr.193**=71, **Pr.192**=76, **Pr.191**=72, **Pr.190**=77
  - **Pr.320**=73, **Pr.321**=78, **Pr.322**=74

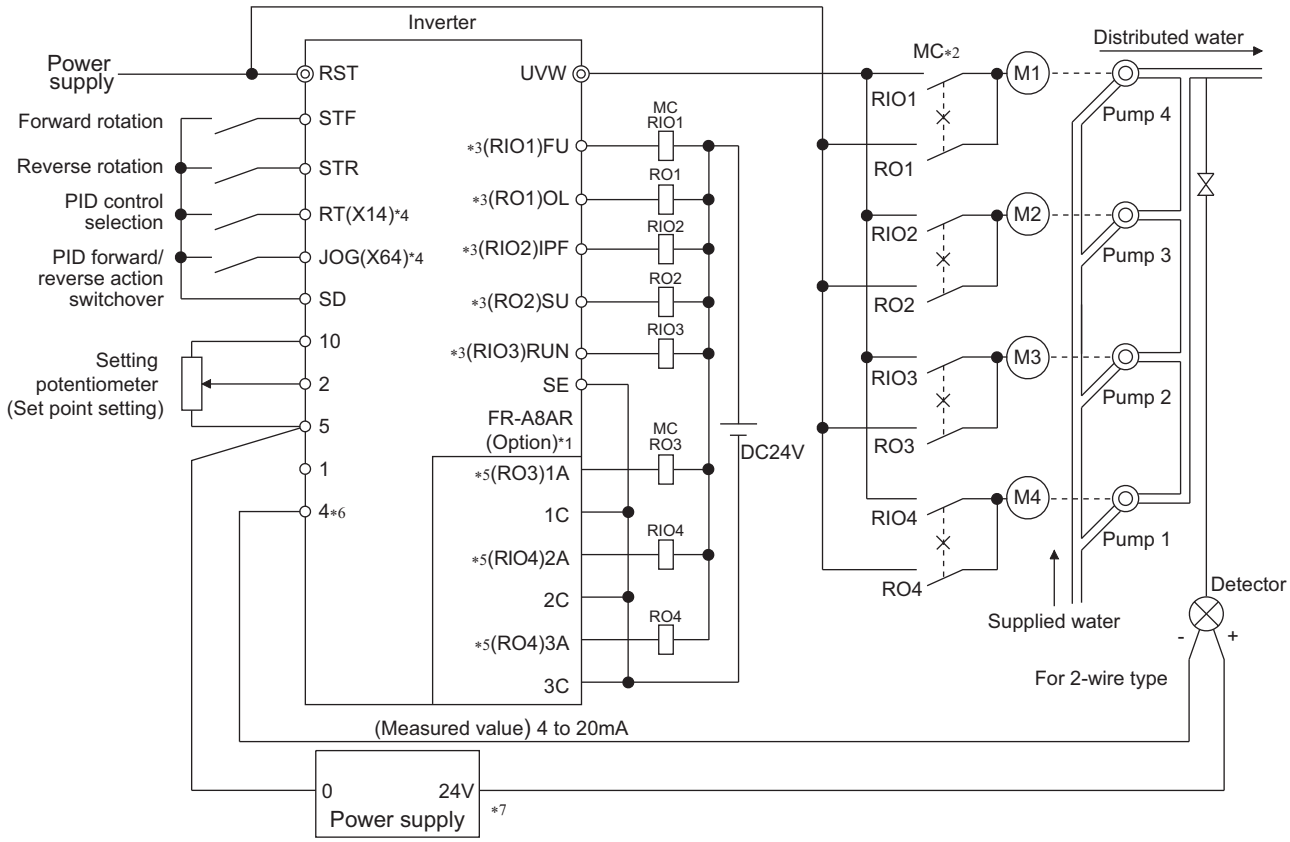

*1 When driving three or more motors, use the plug-in option (FR-A8AR).
*2 Always provide mechanical interlocks for the MC.
*3 The applied output signal terminals differ by the settings of **Pr.190 to Pr.196 (output terminal function selection)**.
*4 The applied input signal terminals differ by the settings of **Pr.178 to Pr.189 (input terminal function selection)**.
*5 The applied output signal terminals differ by the settings of **Pr.320 to Pr.322 (RA output selection)**.
*6 There is no need to input AU signal.
*7 Prepare the commercial power supply in accordance with the power supply specifications of the detector.

◆I/O signals

- When the PID control valid (X14) signal is assigned to the input terminal by setting **Pr.178 to Pr.189 (input terminal function selection)**, the multi-pump function is enabled only at turn-ON of the X14 signal.
- Use **Pr.190 to Pr.196 (output terminal function selection)** or plug-in option (FR-A8AR) to assign functions of motor control signal to **Pr.320 to Pr.322 (RA output selection)**. (Only positive logic is available.)

Output signal	Pr.190 to Pr.196 and Pr.320 to Pr.322 settings		Function
	Positive logic	Negative logic	
SLEEP	70	170*1	PID output interruption
RO1	71	—*2	Commercial power supply side motor 1 connection RO1
RO2	72	—*2	Commercial power supply side motor 2 connection RO2
RO3	73	—*2	Commercial power supply side motor 3 connection RO3
RO4	74	—*2	Commercial power supply side motor 4 connection RO4
RIO1	75	—*2	Inverter side motor 1 connection RIO1
RIO2	76	—*2	Inverter side motor 2 connection RIO2
RIO3	77	—*2	Inverter side motor 3 connection RIO3
RIO4	78	—*2	Inverter side motor 4 connection RIO4

*1 The value cannot be set in **Pr.320 to Pr.322**.
*2 Negative logic cannot be set.

◆Motor switchover timing

- Switchover timing at a start (stop) of an auxiliary motor 1 in the basic system (**Pr.579**="0") and alternative system (**Pr.579**="1")

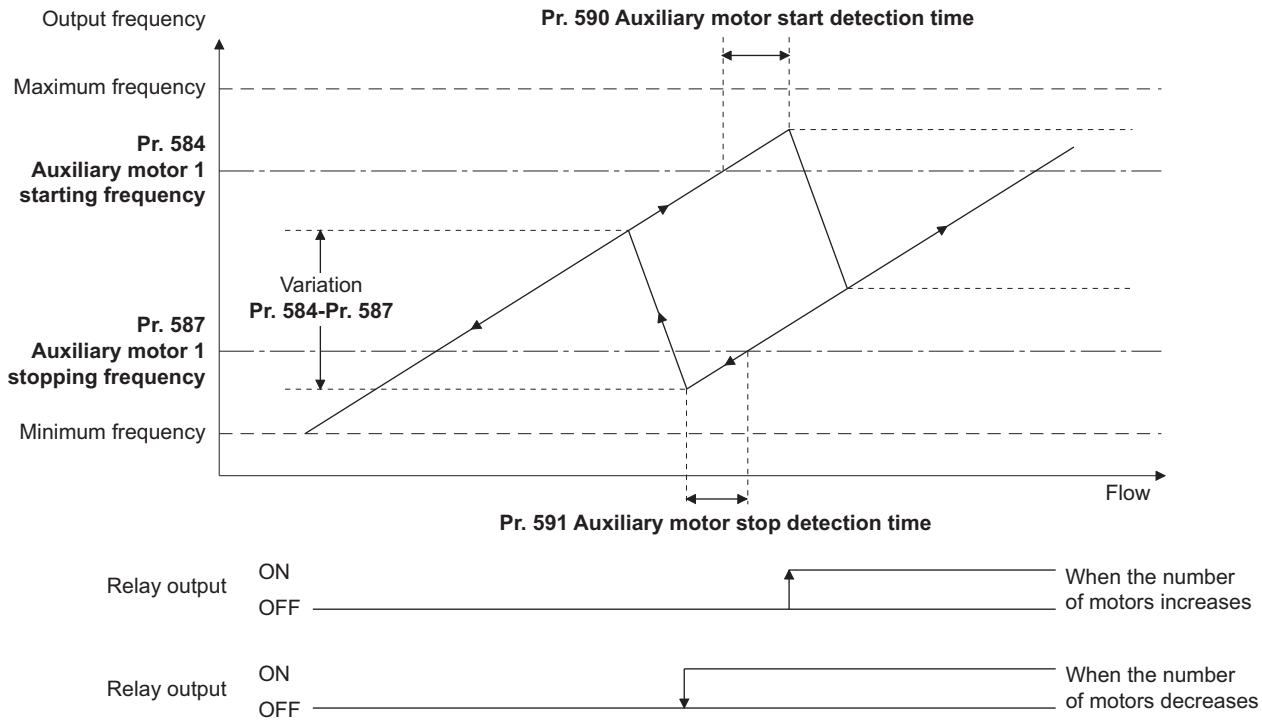

- Switchover timing at a start (stop) of an auxiliary motor 1 in the direct system (**Pr.579**="2") and alternative direct system (**Pr.579**="3")

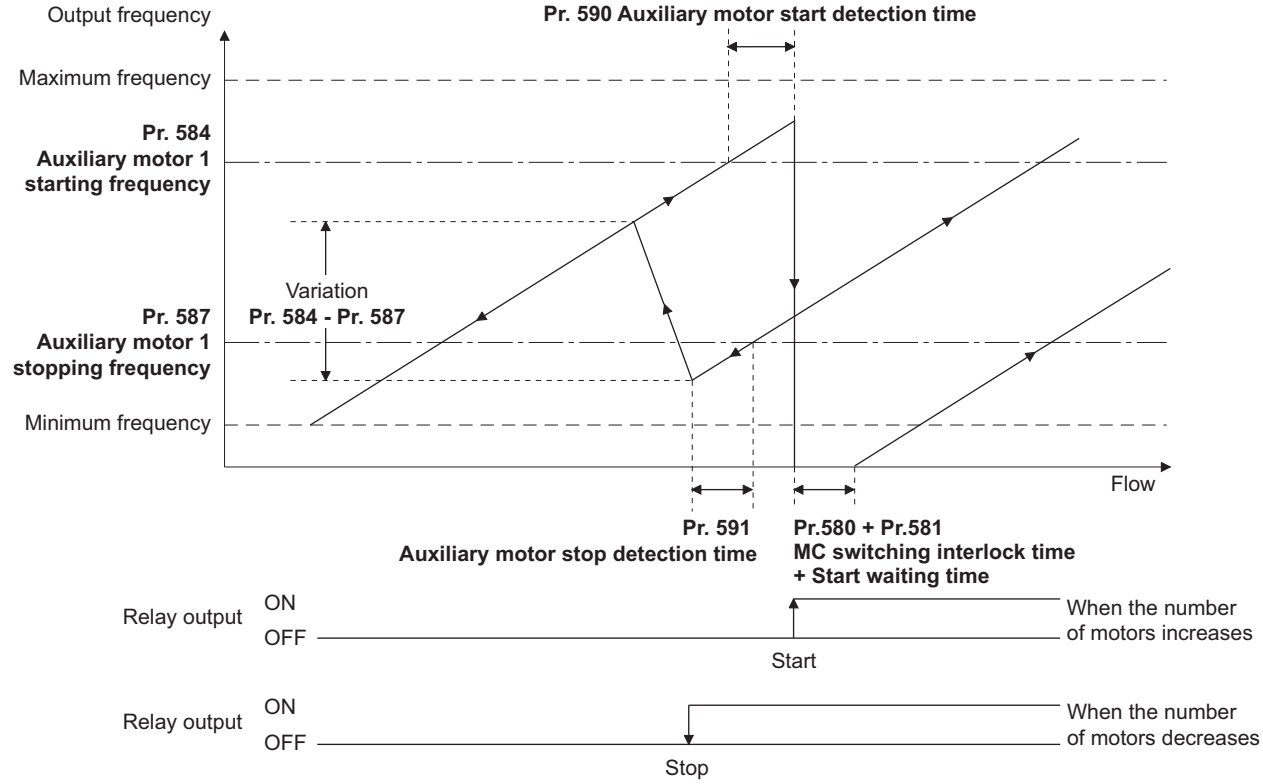

◆Waiting time setting at MC switchover (Pr.580, Pr.581)

- Set a waiting time for switchover of MC for the direct system (**Pr.579**="2") or alternative direct system (**Pr.579**="3").
- Set the MC switching time (for example, the time after RIO1 turns OFF until RO1 turns ON) in **Pr.580 MC switching interlock time**.
- Set the time after the MC switchover until the motor starts (for example, the time after RIO1 turns OFF and RIO2 turns ON until the inverter output starts) in **Pr.581 Start waiting time**. Set this time a little longer than the MC switching time.

◆Acceleration/deceleration time when an auxiliary motor is connected and disconnected (Pr.582, Pr.583)

- Use **Pr.582 Auxiliary motor connection-time deceleration time** to set the deceleration time for forcibly decreasing the output frequency of the inverter when an auxiliary motor connection occurs. Set the deceleration time in **Pr.582** from **Pr.20 Acceleration/deceleration reference frequency** to stop. The output frequency is not forcibly changed when **Pr.582**="9999".
- Use **Pr.583 Auxiliary motor disconnection-time acceleration time** to set the acceleration time for forcibly increasing the output frequency of the inverter when an auxiliary motor disconnection occurs. Set the acceleration time in **Pr.583** from stop to **Pr.20 Acceleration/deceleration reference frequency**. The output frequency is not forcibly changed when **Pr.583**="9999".

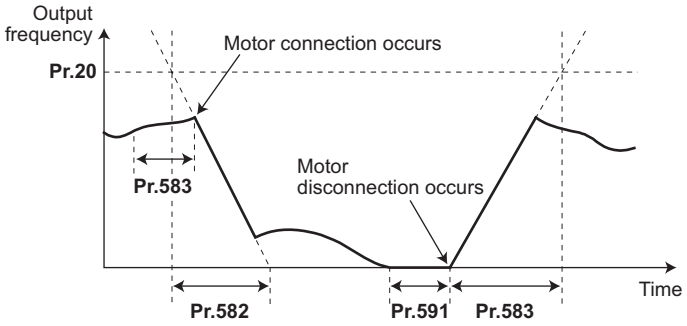

◆Starting auxiliary motors (Pr.584 to Pr.586, Pr.590)

- Use **Pr.584 to Pr.586** to set the output frequency of the inverter at which the commercial power supply operation motors are started. When output frequency equals to or higher than the setting continues for longer than the time set in **Pr.590 Auxiliary motor start detection time**, auxiliary motors driven by the commercial power supply are started.
- To set the starting frequency, use **Pr.584 Auxiliary motor 1 starting frequency** for the first auxiliary motor, and use **Pr.585 Auxiliary motor 2 starting frequency** for the second motor, and use **Pr.586 Auxiliary motor 3 starting frequency** for the third motor.
- The starting sequence depends on the **Pr.579 Motor connection function selection** setting.

◆Stopping auxiliary motors (Pr.587 to Pr.589, Pr.591)

- Use **Pr.587 to Pr.589** to set the output frequency of the inverter at which the commercial power supply operation motors are stopped. When output frequency equals to or lower than the setting continues for longer than the time set in **Pr.591 Auxiliary motor stop detection time**, auxiliary motors driven by the commercial power supply are stopped.
- To set the stopping frequency, use **Pr.587 Auxiliary motor 1 stopping frequency** for the first auxiliary motor, and use **Pr.588 Auxiliary motor 2 stopping frequency** for the second motor, and use **Pr.589 Auxiliary motor 3 stopping frequency** for the third motor.
- The stopping sequence depends on the **Pr.579 Motor connection function selection** setting.

◆Timing diagram

• When using four motors in the basic system (**Pr.579**="0")

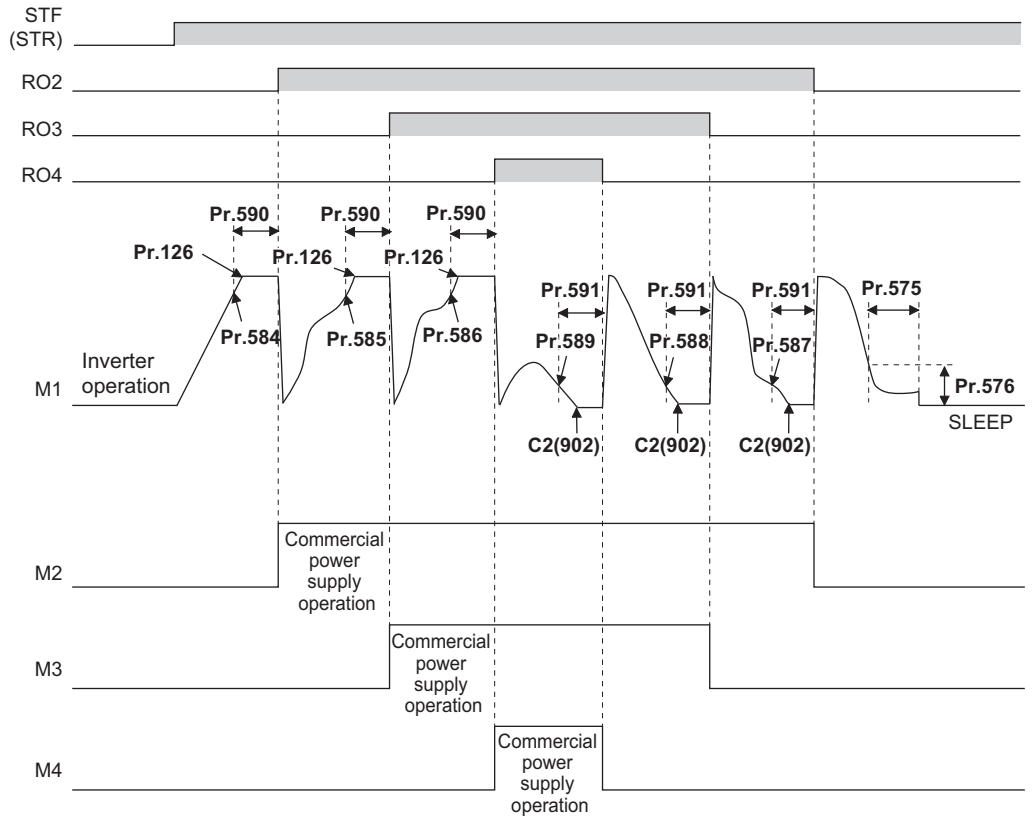

• When using two motors in the alternative system (**Pr.579**="1")

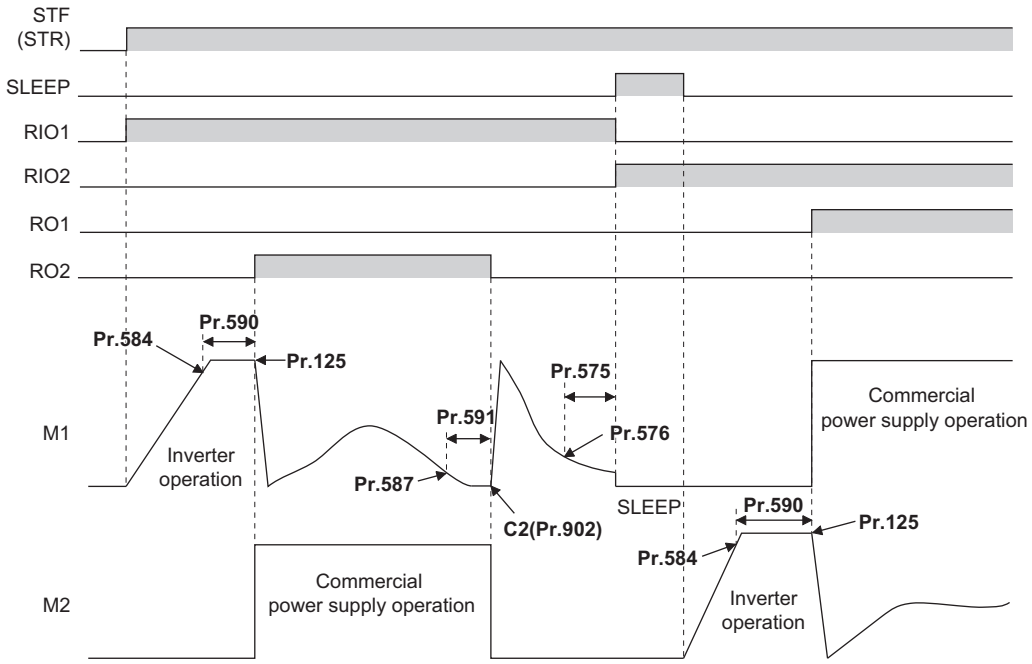

• When using two motors in the direct system (**Pr.579**="2")

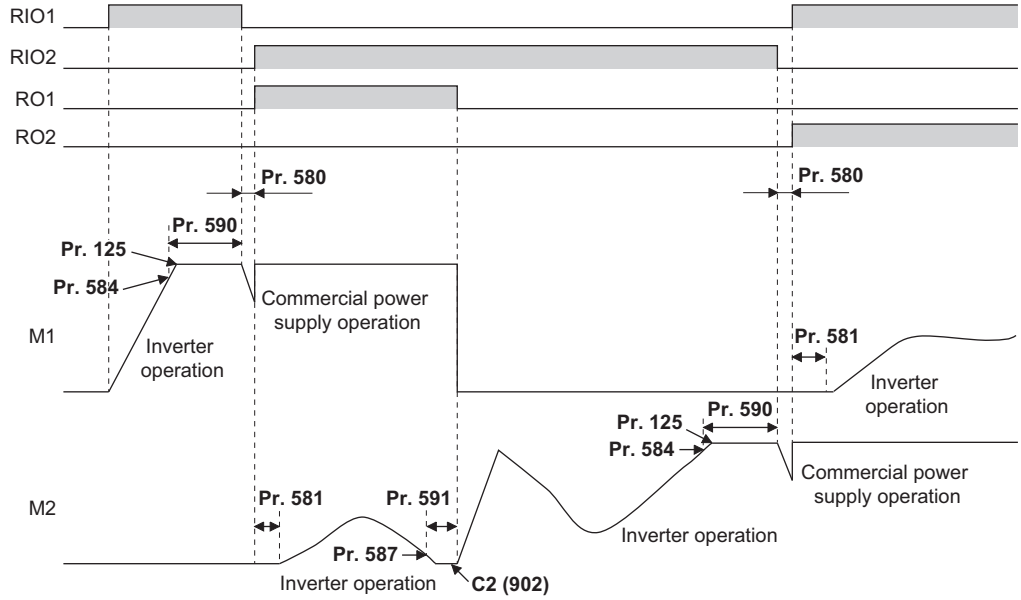

NOTE

- When a start signal is turned OFF while running, MC (RO1 to RO4) turns OFF and the motor decelerates.
- When a protective function is activated while running, MC (RO1 to RO4) turns OFF and the inverter output is shut off.

• When using two motors in the alternative direct system (**Pr.579**="3")

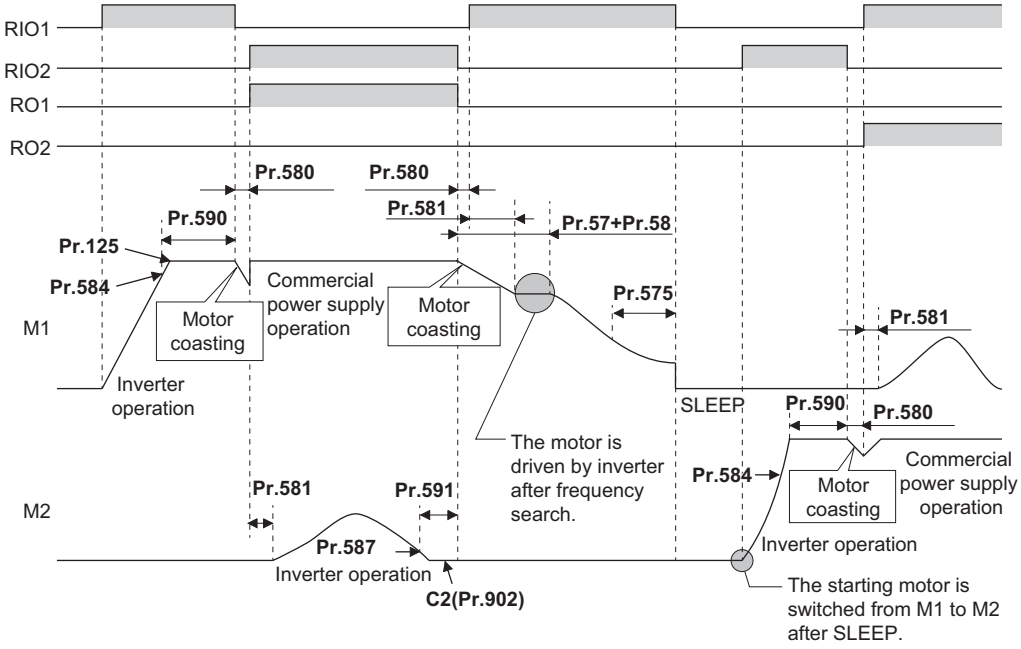

NOTE

- When the start signal is turned OFF during operation, the inverter-driven motor is decelerated to stop. The motors under commercial power supply operation are switched over to inverter-driven operation one at a time and decelerated to stop after frequency search in order from the longest operation time.
- When a protective function is activated while running, MC (RO1 to RO4) turns OFF and the inverter output is shut off.
- When the MRS signal is turned ON during operation, the inverter output is shut off and the running motors coast to a stop. Although the motor with the longest operating time of the commercial power supply operation is switched to the inverter operation after elapse of time set in **Pr.591 Auxiliary motor stop detection time**, the output shutoff status remains. When the MRS signal is turned OFF, the inverter-driven operation starts after frequency search.
- If the starting signal is turned ON during deceleration regardless of the **Pr.579** setting, the multi-pump operation is performed again.

Parameters referred to

Pr.20 Acceleration/deceleration reference frequency, Pr.21 Acceleration/deceleration time increments page 187
Pr.57 Restart coasting time, Pr.58 Restart cushion time page 414
Pr.178 to Pr.189 (input terminal function selection) page 329
Pr.190 to Pr.196 (output terminal function selection) page 288

5.11.10 Automatic restart after instantaneous power failure/flying start with an induction motor

V/F Magnetic flux

The inverter can be restarted without stopping the motor in the following conditions:

- When switching from commercial power supply operation over to inverter running
- When an instantaneous power failure occurs during inverter running
- When the motor is coasting at start

Pr.	Name	Initial value		Setting range	Description
		FM	CA		
162 A700	**Automatic restart after instantaneous power failure selection**	0		0 (2)	Frequency search only performed at the first start
				1	Reduced voltage start only at the first start (no frequency search)
				3	Frequency search only performed at the first start (reduced impact restart)
				10 (12)	Frequency search at every start
				11	Reduced voltage start at every start (no frequency search)
				13	Frequency search at every start (reduced impact restart)
299 A701	**Rotation direction detection selection at restarting**	0		0	Without rotation direction
				1	With rotation direction
				9999	When **Pr.78** ="0", with rotation direction When **Pr.78** ="1, 2" without rotation direction
57 A702	**Restart coasting time**	9999		0	Coasting time differs according to the inverter capacity.*1
				0.1 to 30 s	Set the waiting time for the inverter to perform a restart at power restoration after an instantaneous power failure.
				9999	No restart
58 A703	**Restart cushion time**	1 s		0 to 60 s	Set the voltage cushion time for restart.
163 A704	**First cushion time for restart**	0 s		0 to 20 s	Set the voltage cushion time for restart. Consider this matched to the size of the load (moment of inertia/torque)
164 A705	**First cushion voltage for restart**	0%		0 to 100%	
165 A710	**Stall prevention operation level for restart**	120%	110%	0 to 400%	Set the stall prevention operation level at a restart operation on the assumption that the inverter rated current is 100%.
611 F003	**Acceleration time at a restart**	9999		0 to 3600 s	Set the acceleration time that takes to reach **Pr.20 Acceleration/deceleration reference frequency setting** at a restart.
				9999	Standard acceleration time (for example, **Pr.7**) is applied as the acceleration time at restart.

*1 The coasting time when **Pr.57** = "0" is as shown below. (When **Pr.162, Pr.570** are set to the initial value.)
FR-F820-00077(1.5K) or lower and FR-F840-00038(1.5K) or lower: 0.5 s
FR-F820-00105(2.2K) to FR-F820-00340(7.5K) and FR-F840-00052(2.2K) to FR-F840-00170(7.5K): 1 s
FR-F820-00490(11K) to FR-F820-02330(55K), FR-F840-00250(11K) to FR-F840-01160(55K): 3.0 s
FR-F820-03160(75K) or higher and FR-F840-01800(75K) or higher: 5.0 s

◆Automatic restart after instantaneous power failure function

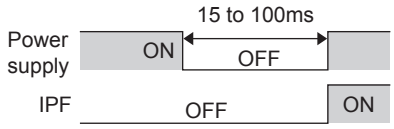

- The inverter output is shut off at the activation of the instantaneous power failure protection (E.IPF) or undervoltage protection (E.UVT). (Refer to page 535 for E.IPF or E.UVT.)
- When E.IPF or E.UVT is activated, the instantaneous power failure (IPF)/undervoltage signal is output.
- The IPF signal is assigned to terminal IPF in the initial setting. To assign the IPF signal to a different terminal, set "2 (positive logic) or 102 (negative logic)" to any of **Pr.190 to Pr.196 (Output terminal function selection)**.
- When the automatic restart after instantaneous power failure function is selected, motor restarts at the power restoration after an instantaneous power failure or undervoltage. (E.IPF and E.UVT are not activated.)

◆Connection (CS signal)

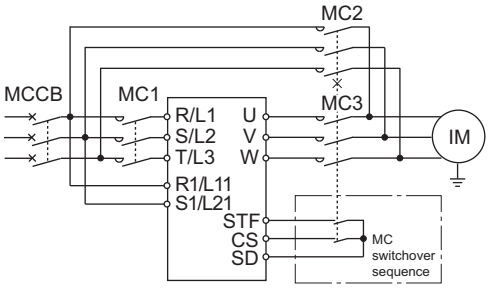

With electronic bypass sequence

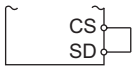

For use for only automatic restart after instantaneous power failure or flying start, turn ON the CS signal in advance.

Only with restart after instantaneous power failure

- When the automatic restart after instantaneous power failure / flying start signal (CS) is assigned to the input terminal by setting **Pr.178 to Pr.189 (input terminal function selection)**, restart operation is enabled at turn-ON of the CS signal.
- When the CS signal is assigned to an input terminal and **Pr.57 Restart coasting time** ≠ "9999" (with restart), the inverter cannot be operated while the CS signal remains OFF.

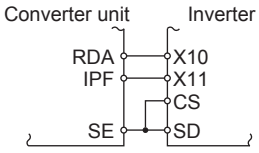

Separated converter type

- Separated converter types detect the instantaneous power failure on the converter unit side. Perform wiring so that the IPF signal transmitted from the converter unit is input to the terminal to which the X11 signal is assigned.
  On the converter unit side, enable the restart operation. (For setting the converter unit, refer to the Instruction Manual of the converter unit.)
- For the terminal to be used for the X10 and X11 signal, set "10" (X10), "11" (X11) in **Pr.178 to Pr.189** and assign the function. (For separated converter types, the X10 signal is assigned to the terminal MRS in the initial setting.)
- For the X10 signal of separated converter types, NC contact input specification is selected in the initial setting. Set **Pr.599** = "0" to change the input specification to NO contact.

NOTE

- Changing the terminal assignment using **Pr.178 to Pr.189 (input terminal function selection)** may affect other functions. Set parameters after confirming the function of each terminal.
- If the CS signal is not assigned to any input terminal, solely setting **Pr.57** will enable the restart operation at all times.

◆Setting for the automatic restart after instantaneous power failure operation (Pr.162)

- The **Pr.162** settings and the instantaneous power failure automatic restart operation under each operation mode are as shown below.

Pr.162 setting	Restart operation	V/F control, Advanced magnetic flux vector control	PM motor control
0 (initial value), (2)*1	At first start	Frequency search	Frequency search for PM motor (Refer to page 420)
1	At first start	Reduced voltage start	
3	At first start	Frequency search (reduced impact restart)	
10, (12)*1	At every start	Frequency search	
11	At every start	Reduced voltage start	
13	At every start	Frequency search (reduced impact restart)	

*1 The same operation is performed for the both settings.

◆Restart operation with frequency search (Pr.162 = "0, 2, 3, 10, 12, 13", Pr.299)

- When **Pr.162** = "0 (initial value), 2, 3, 10, 12, 13", the motor speed is detected at a power restoration so that the motor can re-start smoothly.
- The encoder also detects the rotation direction so that the motor can re-start smoothly even during the reverse rotation.
- Whether or not to detect the rotation direction can be selected by **Pr.299 Rotation direction detection selection at restarting**.
  If the motor capacity is different from the inverter capacity, set **Pr.299** = "0 (no rotation direction detection)".
- When the rotation direction is detected, the following operation is performed according to the **Pr.78 Reverse rotation prevention selection** setting.

Pr.299 setting	Pr.78 setting		
	0	1	2
9999	○	×	×
0 (initial value)	×	×	×
1	○	○	○

○: With rotation direction detection ×: Without rotation direction detection

- By setting "3, 13" in **Pr.162**, the restart can be made smoother with even less impact than when "0, 2, 10, 12" is set in **Pr.162**. When the inverter is restarted with "3, 13" set to **Pr.162**, offline auto tuning is required. (For details on offline auto tuning of Advanced magnetic flux vector control, refer to page 341, and for details on offline auto tuning of V/F control, refer to page 423.)

V/F control, Advanced magnetic flux vector control

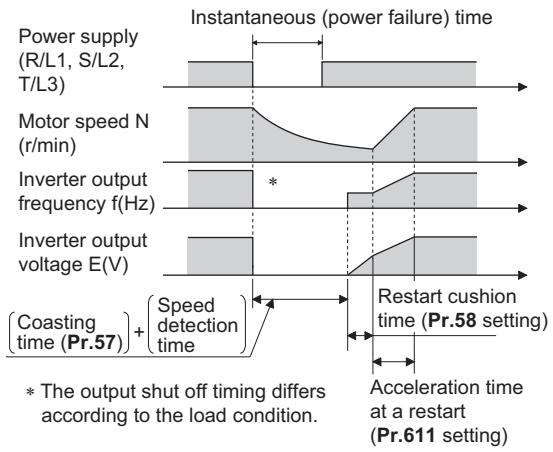

NOTE

- The rotation speed detection time (frequency search) changes according to the rotation speed of the motor. (maximum 1 s)
- When the inverter capacity is two ranks or greater than the motor capacity, the overcurrent protective function (E.OC[]) is sometimes activated and prevents the inverter from restarting.
- If two or more motors are connected to one inverter, this function operates abnormally. (The inverter does not restart successfully.)
- Because a DC injection brake is applied instantaneously at speed detection during a restart, the speed might drop if the moment of inertia (J) of the load is small.
- If reverse operation is detected when "1" (reverse rotation disabled) is set to **Pr.78**, operation decelerates by reverse rotation and then changes to forward rotation when the start command is forward rotation. The inverter does not restart when the start command is reverse rotation.
- When "3, 13" is set to **Pr.162**, limit the wiring length to within 100 m.

◆Restart operation without frequency search (Pr.162 = "1, 11")

- When **Pr.162** = "1 or 11", reduced voltage start is used for the restart operation. In this method, the voltage is raised gradually while keeping the output frequency level at the level before the instantaneous failure, regardless of the motor's coasting speed.

V/F control, Advanced magnetic flux vector control

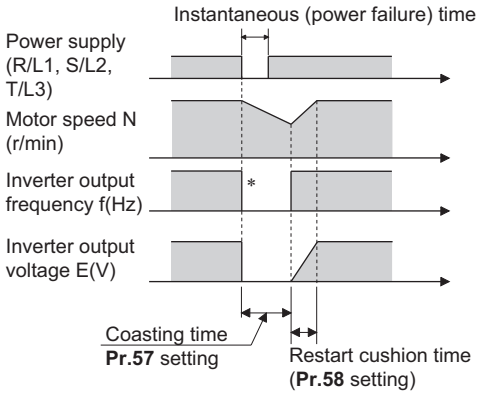

∗ The output shut off timing differs according to the load condition.

NOTE

- This restart method uses the output frequency that was active before the instantaneous power failure stored in memory. If the instantaneous power failure time is 0.2 s or more, the output frequency can no longer be stored and held in memory, so the restart is performed from **Pr.13 Starting frequency** (initial value is 1.5 Hz).

◆Restart at every start (Pr.162 ="10 to 13")

- When "10 to 13" is set in **Pr.162**, a restart operation is performed at each start and automatic restart after instantaneous power failure (**Pr.57** start after the reset time has elapsed). When "0 (initial value) to 3" is set in **Pr.162**, a restart operation is performed at the first start after a power-ON, and from the second power-ON onwards, a start from the starting frequency is performed.

◆Automatic restart operation of MRS (X10) signal

- The restart operation after restoration from output shutoff by the MRS (X10) signal is as shown in the table below according to the **Pr.30** setting.

Pr. 30 setting	Operation after restoration from output shutoff by the MRS (X10) signal
2, 10, 11, 102, 110, 111	Restart operation (starting from the coasting speed)
Other than the above	Starting from **Pr.13 Starting frequency**.

NOTE

- When output is shut off using safety stop function (terminals S1 and S2), the inverter restarts in the same way as when output is shut off by MRS (X10) signal.

◆Adjustment of restart coasting time (Pr.57)

- Coasting time is the time from the motor speed detection to the restart operation start.
- To enable restart operation, set "0" to **Pr.57 Restart coasting time**. If "0" is set to **Pr.57**, the coasting time is automatically set to the following value (Unit: s). Generally, this setting does not interfere with inverter operation.

Pr.162 setting	200 V class FR-F820-[]														
	00046 (0.75K)	00077 (1.5K)	00105 (2.2K)	00167 (3.7K)	00250 (5.5K)	00340 (7.5K)	00490 (11K)	00630 (15K)	00770 (18.5K)	00930 (22K)	01250 (30K)	01540 (37K)	01870 (45K)	02330 (55K)	03160 (75K) or higher
	400 V class FR-F840-[]														
	00023 (0.75K)	00038 (1.5K)	00052 (2.2K)	00083 (3.7K)	00126 (5.5K)	00170 (7.5K)	00250 (11K)	00310 (15K)	00380 (18.5K)	00470 (22K)	00620 (30K)	00770 (37K)	00930 (45K)	01160 (55K)	01800 (75K) or higher
Other than 3, 13	0.5		1				3								5
3, 13	1		2				3								5

- Inverter operation is sometimes hindered by the size of the moment of inertia (J) of the load or running frequency. Adjust this coasting time within the range 0.1 s to 30 s to match the load specification.
- Set the waiting ti,e when the sine wave filter is used (**Pr.72 PWM frequency selection** = "25") to 3 s or more.

◆Restart cushion time (Pr.58)

- The cushion time is the time takes to raise the voltage to the level required for the specified speed after the motor speed detection (output frequency before instantaneous power failure when **Pr.162** = "1 or 11").
- Normally, the motor runs at the initial value as it is. However, adjust to suit the moment of inertia (J) of the load or the size of the torque.

◆Adjustment of restart operation (Pr.163 to Pr.165, Pr.611)

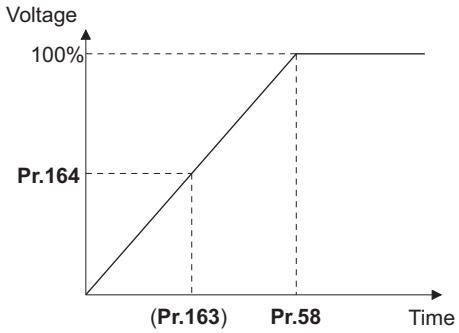

- The voltage cushion time at a restart can be adjusted by **Pr.163 and Pr.164** as shown in the figure on the left.
- The stall prevention operation level at a restart operation can be set at **Pr.165**.
- Using **Pr.611**, the acceleration time to reach **Pr.20 Acceleration/ deceleration reference frequency** after a restart operation can be set. This can be set individually from the normal acceleration time.

NOTE

- Changing the **Pr.21** setting does not affect the **Pr.611** setting increment.
- Changing the terminal assignment using **Pr.178 to Pr.189 (input terminal function selection)** may affect the other functions. Set parameters after confirming the function of each terminal.
- When the restart operation is selected, undervoltage (E.UVT) and instantaneous power failure (E.IPF) of the fault output signals become invalid.
- The SU and FU signals are not output during the restart. These signals are output after the restart cushion time passes.
- Restart operation is also performed after the inverter reset is released or after the retry by the retry function occurs.

Caution

- Provide a mechanical interlock for MC1 and MC2. The inverter will be damaged if power supply is input to the inverter output section.
- When the automatic restart after instantaneous power failure function is selected, the motor suddenly starts (after reset time passes) when an instantaneous power failure occurs. Stay away from the motor and machinery.
  Apply the supplied CAUTION stickers to easily visible places when automatic restart after instantaneous power failure has been selected.

Parameters referred to

Pr.7 Acceleration time, Pr.21 Acceleration/deceleration time increments page 187
Pr.13 Starting frequency page 197, page 198
Pr.65, Pr.67 to Pr.69 retry function page 236
Pr.78 Reverse rotation prevention selection page 217
Pr.178 to Pr.189 (input terminal function selection) page 329

5.11.11 Automatic restart after instantaneous power failure/flying start with an IPM motor PM

When using the IPM motor MM-EFS/MM-THE4, the inverter operation can be restarted without stopping the motor operation.

When the automatic restart after instantaneous power failure function is selected, the motor driving is resumed in the following situations:

- When power comes back ON during inverter driving after an instantaneous power failure
- When the motor is coasting at start

Pr.	Name	Initial value	Setting range	Description
57 **A702**	**Restart coasting time**	9999	0	No coasting time
			0.1 to 30 s	Set the waiting time for the inverter to perform a restart after restoring power due to an instantaneous power failure.
			9999	No restart
162 **A700**	**Automatic restart after instantaneous power failure selection**	0	0, 1, 2, 3	Frequency search only performed at the first start
			10, 11, 12, 13	Frequency search at every start
611 **F003**	**Acceleration time at a restart**	9999	0 to 3600 s	Set the acceleration time to reach **Pr.20 Acceleration/ deceleration reference frequency** at restart.
			9999	Standard acceleration time (for example, **Pr.7**) is applied as the acceleration time at restart.

◆Automatic restart after instantaneous power failure function

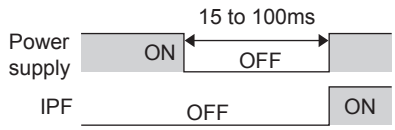

- The inverter output is shut off at the activation of the instantaneous power failure protection (E.IPF) or undervoltage protection (E.UVT). (Refer to page 535 for E.IPF or E.UVT.)
- When E.IPF or E.UVT is activated, the instantaneous power failure/ undervoltage (IPF) signal is output.
- The IPF signal is assigned to terminal IPF in the initial status. By setting "2 (positive logic) or 102 (negative logic)" in any of **Pr.190 to Pr.196 (output terminal function selection)**, the IPF signal can be assigned to another terminal.
- When the automatic restart after instantaneous power failure function is selected, motor driving is resumed at the power restoration after an instantaneous power failure or undervoltage. (E.IPF and E.UVT are not activated.)

◆Connection (CS signal)

- When the automatic restart after instantaneous power failure / flying start signal (CS) is assigned to the input terminal by setting **Pr.178 to Pr.189 (input terminal function selection)**, restart operation is enabled at turn-ON of the CS signal.
- When the CS signal is assigned to an input terminal and **Pr.57 Restart coasting time** ≠ "9999" (with restart), the inverter cannot be operated while the CS signal remains OFF.

NOTE

- Changing the terminal assignment using **Pr.178 to Pr.189 (input terminal function selection)** may affect other functions. Set parameters after confirming the function of each terminal.
- If the CS signal is not assigned to any input terminal, solely setting **Pr.57** will enable the restart operation at all times.
- If the restart operation is selected, instantaneous power failure protection (E.IPF) is disabled while the fault output signal is output at an instantaneous power failure.
- The SU and FU signals are not output during the restart. These signals are output after the restart cushion time passes.
- Restart operation is also performed after the inverter reset is released or after the retry by the retry function occurs.

◆Selection of restart operation (Pr.162)

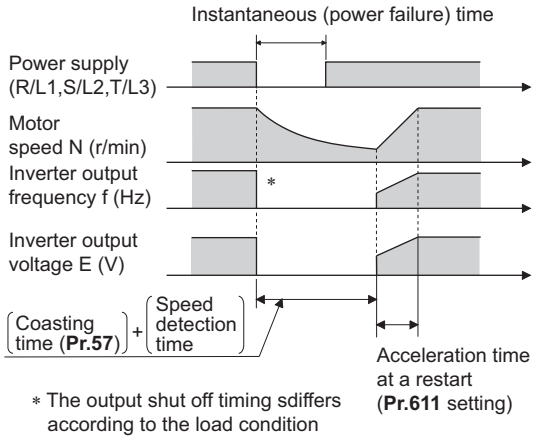

- At a power restoration, the encoder detects the motor speed by a frequency search so that the inverter can re-start smoothly.
- The encoder also detects the rotation direction so that the inverter can re-start smoothly even during the reverse rotation.
- When "10 (11, 12, 13)" is set in **Pr.162**, a restart operation is performed at each start and automatic restart after instantaneous power failure. When "0 (1, 2)" is set to **Pr.162**, a restart operation is performed at the first start after a power-ON, and from the second power-ON onwards, a start from the starting frequency is performed.

NOTE

- Because a DC injection brake is applied instantaneously at speed detection during a restart, the speed might drop if the moment of inertia (J) of the load is small.
- Restart operation with reduced voltage is not available for PM motor control.

◆Restart coasting time (Pr.57)

- The coasting time is the time up till detection of the motor speed and start of restart control.
- To enable restart operation, set "0" (no coasting time) in **Pr.57 Restart coasting time**. Generally, this setting does not interfere with inverter operation.
- Inverter operation is sometimes hindered by the size of the moment of inertia (J) of the load or running frequency. Adjust this coasting time within the range 0.1 s to 30 s to match the load specification.

◆Adjustment of restart operation (Pr.611)

- Using **Pr.611**, the acceleration time to reach **Pr.20 Acceleration/deceleration reference frequency** after a restart operation can be set. This can be set individually from the normal acceleration time.

NOTE

- Changing the **Pr.21 Acceleration/deceleration time increments** setting does not affect the **Pr.611** setting increment.
- A PM motor is a motor with interior permanent magnets. Regression voltage is generated when the motor coasts at an instantaneous power failure or at a flying start. The inverter's DC bus voltage rises if the motor coasts fast or makes a flying start in this condition.
  When using the automatic restart after instantaneous power failure function (**Pr.57** ≠ "9999"), it is recommended to also use the regenerative avoidance function (**Pr.882 Regeneration avoidance operation selection** = "1") to make startups stable. If the overvoltage protective function (E.OV[]) still occurs with the regeneration avoidance function, also use the retry function (**Pr.67**).
- During PM motor control, the automatic restart after instantaneous power failure function operates only when an MM-EFS/MM-THE4 IPM motor is connected
  When a regeneration unit is used, the frequency search may not be available if the rotation speed is about 10% higher than the rating.

⚠ Caution

- **An IPM motor is a motor with interior permanent magnets. High voltage is generated at motor terminals while the motor is running.**
  Do not touch motor terminals and other parts until the motor stops to prevent an electric shock.
- **When the automatic restart after instantaneous power failure function is selected, the motor suddenly starts (after reset time passes) when an instantaneous power failure occurs.**
  Stay away from the motor and machinery.
  Apply the supplied CAUTION stickers to easily visible places when automatic restart after instantaneous power failure has been selected.

Parameters referred to

Pr.13 Starting frequency page 197, page 198
Pr.65, Pr.67 to Pr.69 retry function page 236
Pr.78 Reverse rotation prevention selection page 217
Pr.178 to Pr.189 (input terminal function selection) page 329
Pr.882 Regeneration avoidance operation selection page 514

5.11.12 Offline auto tuning for a frequency search

V/F PM

During V/F control or when driving the IPM motor MM-EFS/MM-THE4, the accuracy of the "frequency search", which is used to detect the motor speed for the automatic restart after instantaneous power failure and flying start, can be improved.

Pr.	Name	Initial value	Setting range	Description
162 A700	Automatic restart after instantaneous power failure selection	0	0 (2)	Frequency search only performed at the first start
			1	Reduced voltage start only at the first start (no frequency search)
			3	Frequency search only performed at the first start (reduced impact restart)
			10 (12)	Frequency search at every start
			11	Reduced voltage start at every start (no frequency search)
			13	Frequency search at every start (reduced impact restart)
298 A711	Frequency search gain	9999	0 to 32767	The offline auto tuning automatically sets the gain required for the frequency search.
			9999	Uses the constant value of Mitsubishi motor (SF-PR, SF-JR, SF-HR, SF-JRCA, SF-HRCA, MM-EFS, MM-THE4 and so on).
560 A712	Second frequency search gain	9999	0 to 32767	The offline auto tuning automatically sets the gain required for the frequency search of the second motor.
			9999	Uses the constant value of Mitsubishi motor (SF-PR, SF-JR, SF-HR, SF-JRCA, SF-HRCA, MM-EFS, MM-THE4 and so on).
96 C110	Auto tuning setting/status	0	0	No offline auto tuning.
			1, 101	Perform offline auto tuning for the Advanced magnetic flux vector control. (Refer to page 341.)
			11	Performs offline auto tuning without rotating the motor (V/F control, PM motor control (IPM motor MM-EFS/MM-THE4)).
90 C120	Motor constant (R1)	9999	0 to 50 Ω, 9999*1	Tuning data (The value measured by offline auto tuning is automatically set.) 9999: Uses the constant value of Mitsubishi motor (SF-PR, SF-JR, SF-HR, SF-JRCA, SF-HRCA and so on).
			0 to 400 mΩ, 9999*2	
463 C210	Second motor auto tuning setting/status	0	0	No auto tuning for the second motor.
			1, 101	Performs offline auto tuning for the second motor.
			11	Performs offline auto tuning without rotating the second motor (V/F control, PM motor control (IPM motor MM-EFS/MM-THE4)).
458 C220	Second motor constant (R1)	9999	0 to 50 Ω, 9999*1	Tuning data of the second motor (same as **Pr.90**)
			0 to 400 mΩ, 9999*2	

*1 For the FR-F820-02330(55K) or lower and FR-F840-01160(55K) or lower.

*2 For the FR-F820-03160(75K) or higher and FR-F840-01800(75K) or higher.

◆Offline auto tuning when performing a frequency search by V/F control (reduced impact restart)

- When the frequency search (reduced impact restart) is selected by setting **Pr.162 Automatic restart after instantaneous power failure selection** = "3 or 13", perform offline auto tuning.

◆Before executing offline auto tuning

Check the following points before performing offline auto tuning:

- V/F control or PM motor control (IPM motor MM-EFS/MM-THE4) is selected.
- A motor is connected. (The motor should not be rotated by the external force applied from outside during the tuning.)
- The motor with the rated motor current equal to or less than the rated inverter current is used. (It must be 0.4 kW or higher.) If a motor with substantially low rated current compared with the rated inverter current is used, speed and torque accuracies may deteriorate due to torque ripples, etc. Set the rated motor current to about 40% or higher of the rated inverter current.
- The target motor is other than a high-slip motor, a high-speed motor, or a special motor.
- The motor may run slightly without actually turning during offline auto-tuning (**Pr.96 Auto tuning setting/status** = "11"), so either firmly secure the motor by the mechanical brake or check to see if turning the motor will cause any safety problems. (Attention is required for lifts, in particular.) The motor turning slightly will not affect tuning performance.
- Offline auto tuning is not performed correctly when the surge voltage suppression filter (FR-ASF-H/FR-BMF-H) and sine wave filter (MT-BSL/BSC) are inserted between the inverter and motor. Be sure to remove them before performing tuning.

◆Setting

1) Set **Pr.96 Auto tuning setting/status** = "11".
2) Set the rated motor current (initial value is inverted rated current) to **Pr.9 Electronic thermal O/L relay**. (Refer to page 225.)
3) Set **Pr.71 Applied motor** according to the motor to be used.

Motor		Pr.71 setting
Mitsubishi standard motor Mitsubishi high-efficiency motor	SF-JR and SF-TH	0 (3, 4)
	SF-JR 4P 1.5 kW or lower	20 (23, 24)
	SF-HR	40 (43, 44)
	Others	0 (3, 4)
Mitsubishi constant-torque motor	SF-JRCA 4P SF-TH (constant-torque)	1 (13, 14)
	SF-HRCA	50 (53, 54)
	Other (SF-JRC, etc.)	1 (13, 14)
Mitsubishi high-performance energy-saving motor	SF-PR	70 (73, 74)
Other manufacturer's standard motor	-	0 (3, 4)
Other manufacturer's constant-torque motor	-	1 (13, 14)

◆Performing tuning

POINT

- Before performing tuning, check the monitor display of the operation panel or the parameter unit if the inverter is in the state ready for tuning. Turning ON the start command while tuning is unavailable starts the motor.

- In the PU operation mode, press FWD / REV on the operation panel.

  For External operation, turn ON the start command (STF signal or STR signal). Tuning will start. (At this time, excitation noise occurs.)

NOTE

- It takes about 10 seconds for tuning to complete. (The time depends on the inverter capacity and motor type.)
- Satisfy the required inverter start conditions to start offline auto tuning. For example, stop the input of MRS signal.
- To force tuning to end, use the MRS or RES signal or press STOP RESET on the operation panel.
  (Turning the start signal (STF signal or STR signal) OFF also ends tuning.)
- During offline auto tuning, only the following I/O signals are valid. (Initial value)
  Input terminals <valid signals> STP (STOP), OH, MRS, RT, RES, STF, STR, S1 and S2
  Output terminals: RUN, OL, IPF, FM/CA, AM, A1B1C1 and SO
- When the rotation speed and the output frequency are selected for terminals FM/CA and AM, the progress status of offline auto tuning is output in fifteen steps from FM/CA and AM.
- During execution of offline auto tuning, do not switch the second function selection signal (RT) ON or OFF. Auto tuning is not executed properly.
- Since the RUN signal turns ON when tuning is started, caution is required especially when a sequence which releases a mechanical brake by the RUN signal has been designed
- When executing offline auto tuning, input the run command after switching ON the main circuit power (R/L1, S/L2, T/L3) of the inverter.
- While **Pr.79 Operation mode selection** = "7", turn the PU operation external interlock (X12) signal ON to tune in the PU operation mode.

- Monitor is displayed on the operation panel (FR-DU08) and the parameter unit (FR-PU07) during tuning as below.

status	Parameter unit (FR-PU07) display	Operation panel (FR-DU08) display
Setting	READ:List 11 ---STOP PU	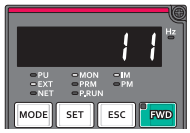
Tuning in progress	TUNE 12 STF FWD PU	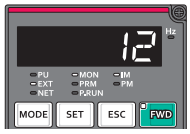
Normal end	TUNE 13 COMPLETION STF STOP PU	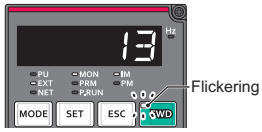
Forced end	TUNE ERROR 8 --- STOP PU	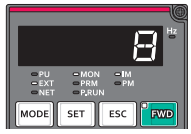

- When offline auto tuning ends, press STOP RESET on the operation panel during PU operation. For External operation, turn OFF the start signal (STF signal or STR signal).
  This operation resets the offline auto tuning, and the PU's monitor display returns to the normal indication.
  (Without this operation, next operation cannot be started.)
- At tuning completion, the tuning results are set in the following parameters:

Parameter	Name
90	Motor constant (R1)
298	Frequency search gain
96	Auto tuning setting/status

NOTE

- The motor constants measured once in the offline auto tuning are stored as parameters and their data are held until the offline auto tuning is performed again. However, the tuning data is cleared when performing all parameter clear.

- If offline auto tuning has ended in error (see the table below), motor constants are not set.
  Perform an inverter reset and restart tuning.

Error display	Error cause	Countermeasures
8	Forced end	Set "11" to **Pr.96** and retry.
9	Inverter protective function operation	Make the setting again.
91	The current limit (stall prevention) function is activated.	Set the acceleration/deceleration time longer. Set **Pr.156 Stall prevention operation selection** = "1".
92	The converter output voltage fell to 75% of the rated value.	Check for the power supply voltage fluctuation.
93	Calculation error The motor is not connected.	Check the motor wiring and make the setting again.
94	Rotation tuning frequency setting error (The frequency command for the tuning was given to exceed the maximum frequency setting, or to be in the frequency jump range.)	Check the **Pr.1 Maximum frequency** and **Pr.31** to **Pr.36** Frequency jump settings.

- When tuning is ended forcibly by pressing STOP RESET or turning OFF the start signal (STF or STR) during tuning, offline auto tuning does not end properly. (The motor constants have not been set.)
  Perform an inverter reset and restart tuning.
- If using a motor falling under the following conditions, set the value of **Pr.9 Electronic thermal O/L relay** as shown below after tuning is complete.
  - If the rated power supply of the motor is 200/220 V(400/440 V) 60 Hz, set the rated motor current multiplied by 1.1 in **Pr.9**.
  - For a motor with a PTC thermistor, thermal protector or other thermal detection, set "0" (motor overheat protection by inverter invalid) in **Pr.9** to protect the motor from overheating.

NOTE

- An instantaneous power failure occurring during tuning will result in a tuning error.
  After power is restored, the inverter goes into the normal operation. Therefore, when STF (STR) signal is ON, the motor runs in the forward (reverse) rotation.
- Any alarm occurring during tuning is handled as in the normal operation. Note that even if a retry operation has been set, retry is not performed.
- The set frequency monitor displayed during the offline auto tuning is 0 Hz.

◆Tuning the second applied motor (Pr.463)

- When performing operation where two motors are switched between one inverter, set the second motor in **Pr.450 Second applied motor**, set **Pr.463 Second motor auto tuning setting/status** = "11", and perform tuning of the second motor.
- Turning ON the RT signal will enable the parameter settings for the second motor as shown below.

Function	RT signal ON (second motor)	RT signal OFF (first motor)
Motor constant (R1)	**Pr.458**	**Pr.90**
Auto tuning setting/status	**Pr.463**	**Pr.96**
Frequency search gain	**Pr.560**	**Pr.298**

NOTE

- The RT signal is assigned to the terminal RT in the initial status. Set "3" in any of **Pr.178 to Pr.189 (input terminal function selection)** to assign the RT signal to another terminal.
- Changing the terminal assignment using **Pr.178 to Pr.189 (input terminal function selection)** may affect the other functions. Set parameters after confirming the function of each terminal.

Caution

- **Note that the motor may start running suddenly.**
- **For the offline auto tuning in vertical lift applications, etc., caution is required to avoid falling due to insufficient torque.**

Parameters referred to

Pr.9 Electronic thermal O/L relay page 225
Pr.65, Pr.67 to Pr.69 retry function page 236
Pr.71 Applied motor page 337
Pr.79 Operation mode selection
Pr.156 Stall prevention operation selection page 248
Pr.178 to Pr.189 (input terminal function selection) page 329

5.11.13 Power failure time deceleration-to-stop function

At instantaneous power failure or undervoltage, the motor can be decelerated to a stop or to the set frequency for the re-acceleration.

Pr.	Name	Initial value FM	Initial value CA	Setting range	Description
261 A730	**Power failure stop selection**	0		0	Power failure time deceleration-to-stop function disabled
				1, 2, 11, 12, 21, 22	Power failure time deceleration-to-stop function enabled Select action at an undervoltage or when an power failure occurs.
262 A731	**Subtracted frequency at deceleration start**	3 Hz		0 to 20 Hz	Normally, the motor runs at the initial value as it is. However, adjust to suit the size of the load specification (moment of inertia, torque).
263 A732	**Subtraction starting frequency**	60 Hz	50 Hz	0 to 590 Hz	When output frequency ≥ **Pr.263** The motor decelerates from the "output frequency - **Pr.262**". When output frequency < **Pr.263** Deceleration from the output frequency
				9999	The motor decelerates from the "output frequency - **Pr.262**".
264 A733	**Power-failure deceleration time 1**	5 s		0 to 3600/ 360 s*1	Set the slope applicable from the deceleration start to the **Pr.266** set frequency.
265 A734	**Power-failure deceleration time 2**	9999		0 to 3600/ 360 s*1	Set the slope applicable for the frequency range starting at **Pr.266** and downward.
				9999	Same as **Pr.264**.
266 A735	**Power failure deceleration time switchover frequency**	60 Hz	50 Hz	0 to 590 Hz	Set the frequency at which the slope during deceleration switches from the **Pr.264** setting to the **Pr.265** setting.
294 A785	**UV avoidance voltage gain**	100%		0 to 200%	Adjust the response at undervoltage avoidance operation. Setting a large value improves the response to changes in the bus voltage.
668 A786	**Power failure stop frequency gain**	100%		0 to 200%	Adjust the response level for the operation where the deceleration time is automatically adjusted.
606 T722	**Power failure stop external signal input selection**	1		0	Normally open input (NO contact input specification)
				1	Normally closed input (NC contact input specification)

*1 When the **Pr.21 Acceleration/deceleration time increments** setting is "0" (initial value), the setting range is "0 to 3600 s" and the setting increment is "0.1 s", and when it is "1", the setting range is "0 to 360 s" and the setting increment is "0.01 s".

◆Connection and parameter setting

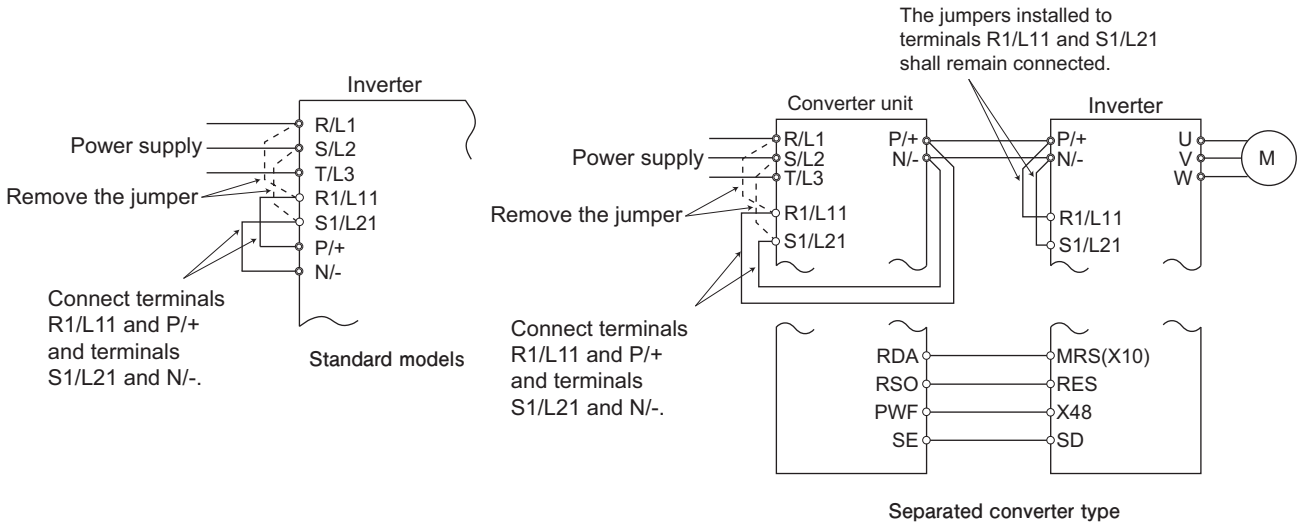

- Remove the jumpers across terminal R/L1-R1/L11 and terminal S/L2-S1/L21, and connect terminal R1/L11 to terminal P/+, and terminal S1/L21 to terminal N/-.
- If an undervoltage, power failure or input phase loss occurs when **Pr.261 Power failure stop selection** ≠ "0", the motor decelerates to a stop.

- The power failure time deceleration stop function operates as follows at an input phase loss.

Pr.261	Pr.872	Operation when an input phase loss occurs
0	0	Continuous operation
	1	Input phase loss (E.ILT)
1, 2	0	Continuous operation
	1	Deceleration stop
21, 22	—	Deceleration stop

- For the separated converter type, connect the terminal to which PWF signal of the converter unit is assigned and the terminal to which X48 signal of the inverter is assigned. Also, set **Pr.261** of the converter unit in accordance with the inverter setting. (Refer to the Instruction Manual of the converter unit.)

◆Outline of operation of deceleration stop at a power failure

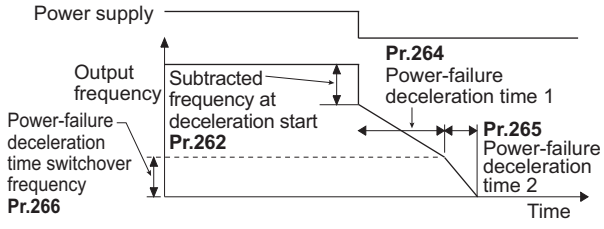

- If an undervoltage or power failure occurs, the output frequency is turned OFF only for the frequency set to **Pr.262 Subtracted frequency at deceleration start**.
- The motor decelerates for the time set to **Pr.264 Power-failure deceleration time 1**. (The deceleration time setting is the time it takes for the motor to stop from **Pr.20 Acceleration/deceleration reference frequency**.)
- Change the deceleration time (slope) to stop using **Pr.265 Power-failure deceleration time 2** when the frequency is too low to obtain the regenerative energy or in other instances.

◆Action setting at undervoltage and power failure

- Set **Pr.261** to select the action at an undervoltage and power failure.

Pr.261 Setting	Action at undervoltage and power failure	Power restoration during deceleration at occurrence of power failure	Deceleration stop time	Undervoltage avoidance function
0	Coasts to stop	Coasts to stop	—	—
1	Deceleration stop	Deceleration stop	According to **Pr.262 to Pr.266** setting	Not used
2		Re-acceleration		Not used
11		Deceleration stop		With
12		Re-acceleration		With
21		Deceleration stop	Automatic adjustment of deceleration time	Not used
22		Re-acceleration		Not used

◆Power failure stop function (Pr.261 ="1, 11, 21")

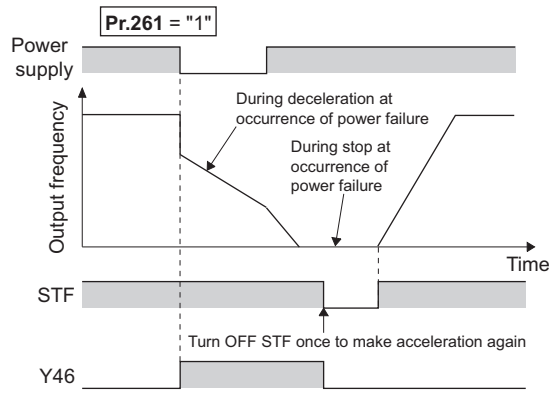

- Even if power is restored during deceleration triggered by a power failure, deceleration stop is continued after which the inverter stays stopped. To restart operation, turn the start signal OFF then ON again.

NOTE

- If the automatic restart after instantaneous power failure is selected (**Pr.57 Restart coasting time** ≠ "9999") while the power failure time deceleration-to-stop function is set enabled (**Pr.261** = "1, 11, or 21"), the power failure time deceleration-to-stop function is disabled.
- When the power failure time deceleration-to-stop function is enabled (**Pr.261** = "1, 11 or 21"), the inverter will not start even if the power is turned ON or inverter reset is performed with the start signal (STF/STR) ON. Turn OFF the start signal once and then ON again to make a start.

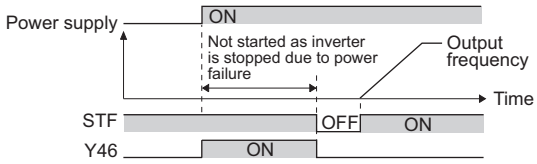

◆Continuous operation function at instantaneous power failure (Pr.261 ="2, 12, 22")

- The motor re-accelerates to the set frequency if the power restores during the deceleration to stop.
- Combining with the automatic restart after instantaneous power failure function enables a power failure time deceleration stop and re-acceleration at a power restoration.
  If the power is restored after stoppage by a power failure, a restart operation is performed when automatic restart after instantaneous power failure (**Pr.57** ≠ "9999") is selected.

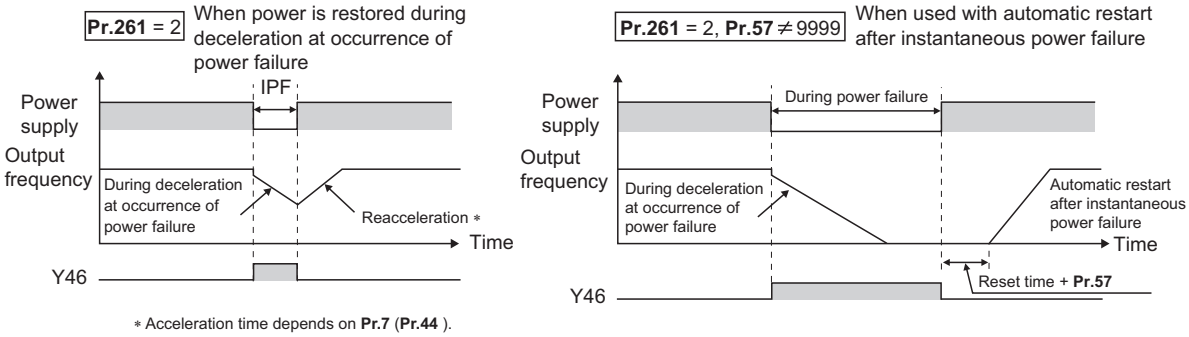

* Acceleration time depends on **Pr.7** (**Pr.44**).

◆Undervoltage avoidance function (Pr.261 = "11, 12" Pr.294)

- If "11, 12" is set to **Pr.261**, the deceleration time is adjusted (shortened) to prevent an undervoltage from occurring during deceleration at occurrence of power failure.
- Adjust the downward frequency slope and the response level using **Pr.294 UV avoidance voltage gain**. Setting a large value improves the response to the bus voltage.

◆Automatic adjustment of deceleration time (Pr.261 ="21, 22", Pr.294, Pr.668)

- When "21, 22" is set to **Pr.261**, the deceleration time is automatically adjusted to keep (DC bus) voltage constant in the converter when the motor decelerates to a stop at a power failure. Setting of **Pr.262 to Pr.266** is not required.
- If a phenomenon such as motor vibration occurs during operation of the deceleration time automatic adjustment function, adjust the response level by setting the **Pr.668 Power failure stop frequency gain**. Increasing the setting improves the response to change in the bus voltage. However, the output frequency may become unstable.
- If setting **Pr.294 UV avoidance voltage gain** lower also does not suppress the vibration, set **Pr.668** lower.

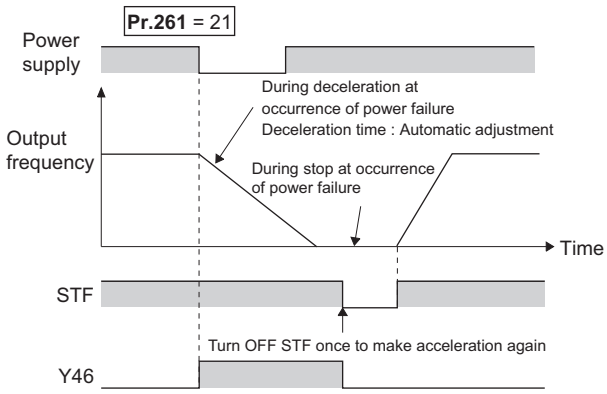

◆Deceleration stop by the power failure stop external signal (X48)

- By turning OFF X48 signal, the power failure time deceleration-to-stop function is activated. This function is used, for example, when an external power failure detection circuit is installed.
- To use the power failure time deceleration-to-stop function for the separated converter type, use X48 signal. Connect the terminal to which PWF signal of the converter unit is assigned and the terminal to which X48 signal of the inverter is assigned.
- In the initial setting, X48 signal is used with the normally closed (NC contact) input specification. Use **Pr.606 Power failure stop external signal input selection** to change the specification to the normally open (NO contact) input.
- To use the X48 signal, set "48" in any of **Pr.178 to Pr.189 (Input terminal function selection)** to assign the function to an input terminal.

◆During deceleration at occurrence of power failure signal (Y46)

- After deceleration by a power failure, the inverter is not restarted even though the start command is input. Check the during deceleration at occurrence of power failure signal (Y46) at a power failure. (for example, when input phase loss protection (E.ILF) occurs)
- The Y46 signal is turned ON during deceleration at occurrence of power failure and in a stop status after deceleration at occurrence of power failure.
- For the Y46 signal, assign the function by setting "46 (positive logic)" or "146 (negative logic)" in any of **Pr.190 to Pr.196 (Output terminal function selection)**.

◆Power failed signal (Y67 signal)

- Y67 signal turns ON when the output is shut off due to detection of power failure (power supply fault) or undervoltage, or the power failure time deceleration-to-stop function is activated.
- For Y67 signal, assign the function by setting "67 (positive logic)" or "167 (negative logic)" in any of **Pr.190 to Pr.196 (output terminal function selection)**.

NOTE

- When "2" is set to **Pr.30 Regenerative function selection** (for instance, when FR-HC2, FR-CV is used), the deceleration-to-stop function is invalid at a power failure.
- If the "output frequency - **Pr.262**" at undervoltage or at power failure is a negative value, it is regarded as 0 Hz. (DC injection brake operation is performed without deceleration.)
- The power failure time deceleration stop function is disabled during a stop or when the breaker is tripped.
- The Y46 signal turns ON if an undervoltage occurs even if a deceleration at a power failure has not occurred. For this reason, the Y46 signal is sometimes output instantaneously when the power supply is turned OFF. This is not a fault.
- When the power failure time deceleration-to-stop function is selected, undervoltage protection (E.UVT), instantaneous power failure protection (E.IPF) and input phase loss protection (E.ILF) are not invalid.
- When the load is high during PM motor control, an undervoltage sometimes causes the inverter to coast to a stop.
- Changing the terminal assignment using **Pr.178 to Pr.189 (input terminal function selection)** or **Pr.190 to Pr.196 (output terminal function selection)** may affect the other functions. Set parameters after confirming the function of each terminal.

Caution

- **Even if the power failure time deceleration-to-stop function is set, some loads might cause the inverter to trip and the motor to coast.**
  The motor will coast if sufficient regenerative power is not obtained from the motor.

Parameters referred to

Pr.12 DC injection brake operation voltage page 502
Pr.20 Acceleration/deceleration reference frequency, Pr.21 Acceleration/deceleration time increments page 187
Pr.30 Regenerative function selection page 508
Pr.57 Restart coasting time page 414, page 420
Pr.190 to Pr.196 (output terminal function selection) page 288
Pr.872 Input phase loss protection selection page 235

5.11.14 PLC function

The inverter can be run in accordance with a sequence program.
In accordance with the machine specifications, a user can set various operation patterns: inverter movements at signal inputs, signal outputs at particular inverter statuses, and monitor outputs, etc.

Pr.	Name	Initial value	Setting range	Description		
414 **A800**	**PLC function operation selection**	0	0	PLC function disabled		
			1	PLC function enabled	The SQ signal is enabled by input from a command source (external input terminal/ communication).	
			2		The SQ signal is enabled by input from an external input terminal.	
415 **A801**	**Inverter operation lock mode setting**	0	0	The inverter start command is enabled regardless of the operating status of the sequence program.		
			1	The inverter start command is enabled only while the sequence program is running.		
416 **A802**	**Pre-scale function selection**	0	0 to 5	Unit scale factor 0: No function 1: ×1 2: ×0.1 3: ×0.01 4: ×0.001 5: ×0.0001	When the pulse train is input from terminal JOG, the number of sampled pulses can be converted. The result of conversion is stored to SD1236. "Number of sampled pulses" = "input pulse value per count cycle" × "pre-scale setting value **(Pr.417)**" × "unit scale factor **(Pr.416)**"	
417 **A803**	**Pre-scale setting value**	1	0 to 32767	Pre-scale setting value		
498 **A804**	**PLC function flash memory clear**	0	0, 9696 (0 to 9999)	0: Clears the flash memory fault display (no operation after writing while the flash memory is in normal operation).		Write
				9696: Clears the flash memory (no operation Write after writing during flash memory fault).		
				Other than 0 and 9696: Outside of the setting range		
				0: Normal display		Read
				1: The flash memory has not been cleared because the PLC function is enabled.		
				9696: During flash memory clearing operation or flash memory fault		
1150 to 1199 **A810 to A859**	**User parameters 1toUser parameters 50**	0	0 to 65535	Desired values can be set. Because devices D206 to D255 used by the PLC function can be mutually accessed, the values set to **Pr.1150 to Pr.1199** can be used by the sequence program. The result of performing calculation by a sequence program can also be monitored by **Pr.1150 to Pr.1199**.		

◆Outline of PLC function

- To enable the PLC function, set "1" or "2" in **Pr.414 PLC function operation selection**. When "2" is set in **Pr.414**, the sequence startup (SQ) signal from the external input terminal is valid regardless of the setting of the **Pr.338 Communication operation command source**.
- Switch the execution key (RUN/STOP) of the sequence program by turning the SQ signal ON/OFF. The sequence program can be executed by turning the SQ signal ON. To input the SQ signal, set "50" in any of **Pr.178 to Pr.189 (input terminal function selection)** to assign the function to a terminal.
- When "1" is set in **Pr.415 Inverter operation lock mode setting**, the inverter can be operated only when the sequence program is running. By changing the PLC program status from RUN to STOP during inverter operation, the motor decelerates to stop.
  To stop the inverter operation at the STOP status of the PLC program while performing auto operation using SD1148 (or SM1200 to 1211) of the PLC program, set **Pr.415** = "1".
- To write sequence programs, use FR Configurator2 on a personal computer connected to the inverter through RS-485 communication or USB.

NOTE

- For the details of the PLC function, refer to the PLC Function Programming Manual and the Instruction Manual of FR Configurator2.

◆Copying the PLC function project data to USB memory

- This function copies the PLC function project data to a USB memory device.
  The PLC function project data copied in the USB memory device can be copied to other inverters.
  This function is useful in backing up the parameter setting and for allowing multiple inverters to operate by the same sequence programs.
- Refer to page 61 for an outline of the USB communication function.

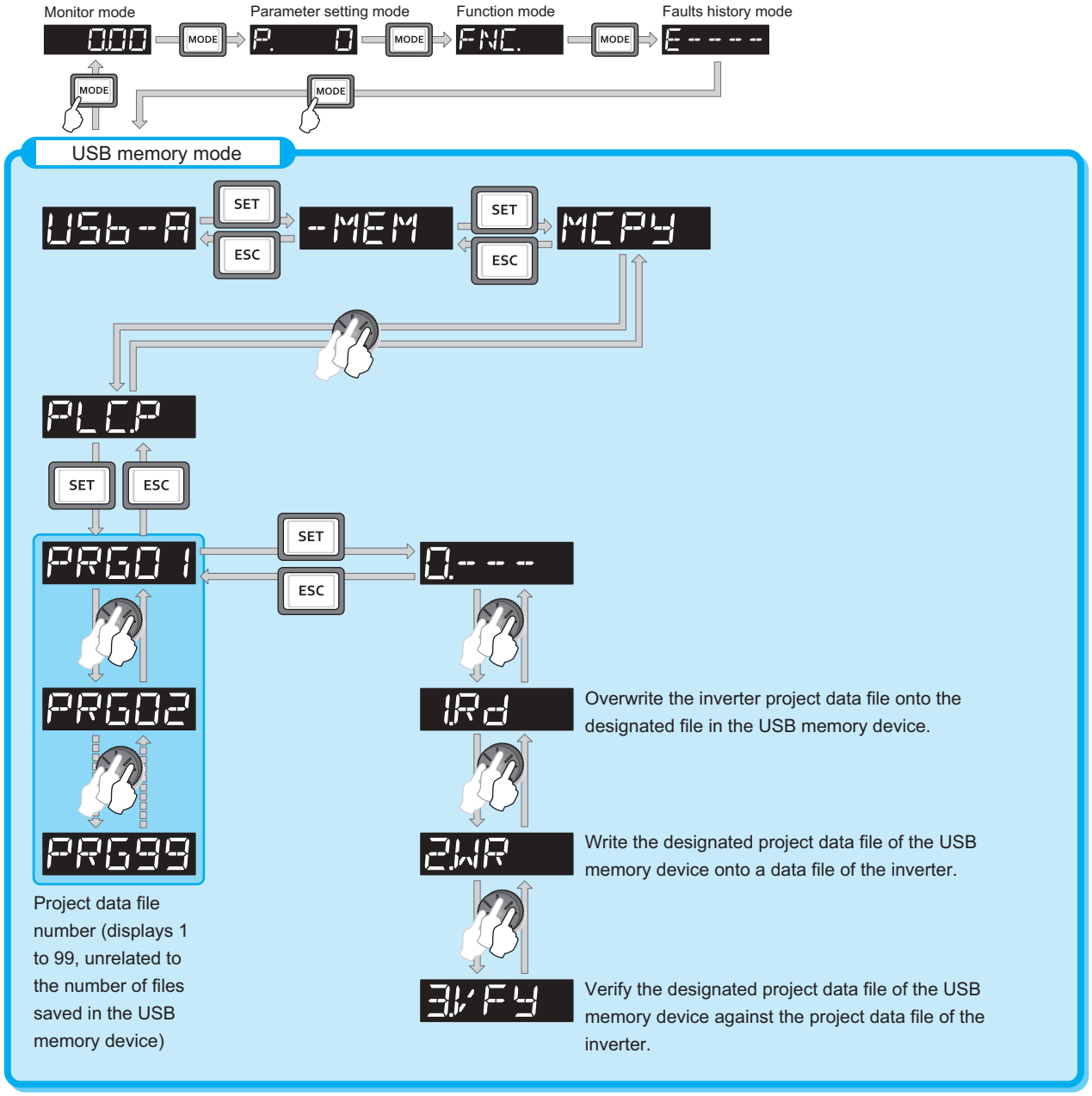

- The following data can be copied by copying the project data via USB memory.

Extension	File type	Copy from inverter to USB memory	Copy from USB memory to inverter
.QPA	Parameter file	Supported	Supported
.QPG	Program file	Supported	Supported
.C32	Function block source information	Supported	Supported
.QCD	Global text comment information	Supported	Supported
.DAT	Project management information	Supported	Not available
.TXT	Copy information	Supported	Not available

NOTE

- If the project data of the PLC function is locked with a password using FR Configurator 2, copying to the USB memory device and verification are disabled. Also if set to write-disabled, writing to the inverter is disabled.For the details of the PLC function, refer to the PLC Function Programming Manual and the Instruction Manual of FR Configurator 2.

Parameters referred to

Pr.338 Communication operation command source page 210

5.11.15 Trace function

- The operating status of the inverter can be traced and saved on a USB memory device.
- Saved data can be monitored by FR Configurator 2, and the status of the inverter cam be analyzed.

Pr.	Name	Initial value	Setting range	Description
1020 A900	Trace operation selection	0	0	Without trace operation
			1	Sampling start
			2	Forced trigger
			3	Sampling stop
			4	Transfer of data to USB memory divice
1021 A901	Trace mode selection	0	0	Memory mode
			1	Memory mode (automatic transfer)
			2	Recorder mode
1022 A902	Sampling cycle	2	0 to 9	Set the sampling cycle. 0: 0.125 ms, 1: 0.252 ms, 2: 1 ms, 3: 2 ms, 4: 5 ms, 5: 10 ms, 6: 50 ms, 7: 100 ms, 8: 500 ms, 9: 1 s (Regarding the setting value "0 and 1", the cycle varies by the control mode.)
1023 A903	Number of analog channels	4	1 to 8	Select the number of analog channels to be sampled.
1024 A904	Sampling auto start	0	0	Manual sampling start
			1	Sampling starts automatically when the power supply is turned ON or at a reset
1025 A905	Trigger mode selection	0	0	Fault trigger
			1	Analog trigger
			2	Digital trigger
			3	Analog or digital trigger (OR logic)
			4	Both analog and digital trigger (AND logic)
1026 A906	Number of sampling before trigger	0 to 100%	90%	Set the percentage of the pre-trigger sampling time with respect to the overall sampling time.
1027 A910	Analog source selection (1ch)	201	1 to 3, 5 to 14, 17, 18, 20, 23, 24, 34, 40 to 42, 52 to 54, 61, 62, 64, 67, 68, 81 to 96, 98, 201 to 213, 230 to 232, 237, 238	Select the analog data (monitor) to be sampled on each channel.
1028 A911	Analog source selection (2ch)	202		
1029 A912	Analog source selection (3ch)	203		
A1030 A913	Analog source selection (4ch)	204		
1031 A914	Analog source selection (5ch)	205		
1032 A915	Analog source selection (6ch)	206		
1033 A916	Analog source selection (7ch)	207		
1034 A917	Analog source selection (8ch)	208		
1035 A918	Analog trigger channel	1	1 to 8	Select the analog channel to be the trigger.
1036 A919	Analog trigger operation selection	0	0	Sampling starts when the value of the analog monitor exceeds the value set at the trigger level (**Pr.1037**)
			1	Sampling starts when the value of the analog monitor falls below the value set at the trigger level (**Pr.1037**)
1037 A920	Analog trigger level	1000	600 to 1400	Set the level at which the analog trigger turns ON. The trigger level is the value obtained by subtracting 1000 from the set value.

(A) Application parameters

Pr.	Name	Initial value	Setting range	Description
1038 A930	**Digital source selection (1ch)**	1	1 to 255	Select the digital data (I/O signal) to be sampled on each channel.
1039 A931	**Digital source selection (2ch)**	2		
1040 A932	**Digital source selection (3ch)**	3		
1041 A933	**Digital source selection (4ch)**	4		
1042 A934	**Digital source selection (5ch)**	5		
1043 A935	**Digital source selection (6ch)**	6		
1044 A936	**Digital source selection (7ch)**	7		
1045 A937	**Digital source selection (8ch)**	8		
1046 A938	**Digital trigger channel**	1	1 to 8	Select the digital channel to be the trigger.
1047 A939	**Digital trigger operation selection**	0	0	Trace starts when the signal turns ON
			1	Trace starts when the signal turns OFF

◆Operation outline

- This function samples the status (analog monitor and digital monitor) of the inverter, traces the sampling data when a trigger (trace start condition) is generated, and saves the resulting trace data.
- When the trace function is set enabled, samplings are collected and the inverter goes into the pre-trigger status.
- In the pre-trigger status, samples are collected, and the trigger standby status is entered when sufficient samples for the number of pre-trigger samples have been collected.
- When the trigger is generated in the trigger standby status, the trace is started and the trace data is saved.

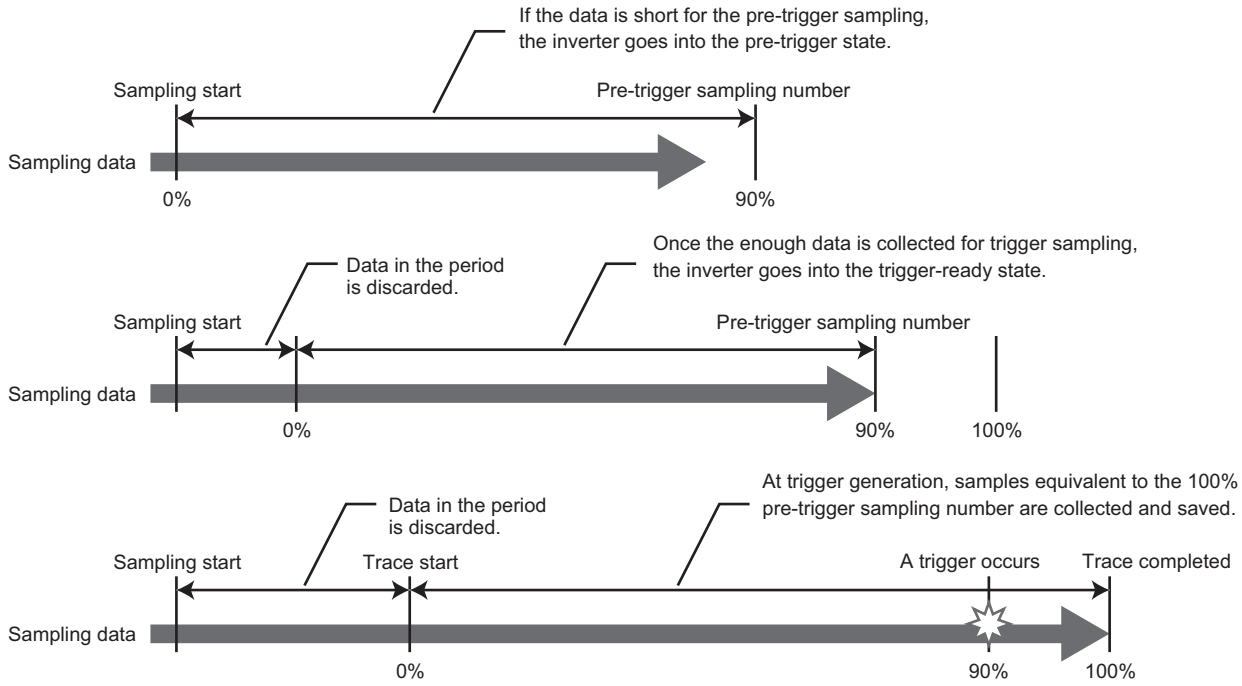

◆Selection of trace mode (Pr.1021)

- Select how to save the trace data which results from sampling the inverter status.
- There are two trace data save methods, memory mode and recorder mode.

Pr.1021 setting	Mode	Description
0	Memory mode	In this mode, trace data is saved sequentially to internal RAM on the inverter. If automatic transfer is set, the trace data in internal RAM is transferred to USB memory device when the trigger is being generated. Data can be transferred to a USB memory device as long as data is held in internal RAM. Trace data in internal RAM is cleared when the power supply is turned OFF or when the inverter is reset.
1	Memory mode (automatic transfer)	
2	Recorder mode	In this mode, trace data is saved directly to USB memory device. Sampling data is fixed at eight analog channels and eight digital channels. The sampling cycle in this mode is longer than in the memory mode. (1 ms or longer)

NOTE

- When the trace function is used in the recorder mode, use a USB memory device having at least 1 GB of free space.
- Data transferred to USB is saved in the "TRC" folder under the "FR_INV" folder.
- Up to 99 sets of trace data can be saved in the USB memory device. When data transfer to USB memory device reaches 99 sets of trace data, data is successively overwritten starting with the older data.

◆Setting of sampling cycle (interval) and number of sampling channels (Pr.1022, Pr.1023)

- Set the sampling cycle (interval).
  The shortest cycle in the recorder mode is 1 ms. When the recorder mode is set, sampling is performed at a sampling cycle of 1 ms even if "0, 1" is set to **Pr.1022 Sampling cycle**.
- When the memory mode is set, the number of analog channels to sample can be set in the **Pr.1023 Number of analog channels**. Start setting from the smaller channel number. Up to eight channels can be set. The sampling time becomes shorter the more channels are set.
  The number of channels is always 8 when the recorder mode is used or when digital channels are used.
- The sampling time differs according to the sampling cycle and number of sampling channels.

Number of channels	Memory mode sampling time	
	Minimum (Pr.1022 = "0")	Maximum (Pr.1022 = "9")
1	213 ms	1704 s
2	160 ms	1280 s
3	128 ms	1024 s
4	106.5 ms	852 s
5	91.8 ms	728 s
6	80.0 ms	640 s
7	71.8 ms	568 s
8	60 ms	512 s

◆Analog source (monitored item) selection

• Select the analog sources (monitored items) to be set to **Pr.1027** to **Pr.1034** from the table below.

Setting value	Monitored item*1	Minus sign display*2	Trigger level criterion*3
1	Output frequency/speed		*4
2	Output current		*4
3	Output voltage		*4
5	Frequency setting value/speed setting		*4
6	Running speed		*4
7	Motor torque		*4
8	Converter output voltage		*4
9*5	Regenerative brake duty		*4
10	Electronic thermal O/L relay load factor		*4
11	Output current peak value		*4
12	Converter output voltage peak value		*4
13	Input power		*4
14	Output power		*4
17	Load meter		*4
18	Motor excitation current		*4
20	Cumulative energization time		65535
23	Actual operation time		65535
24	Motor load factor		*4
34	Motor output		*4
40	PLC function user monitor 1	○	*4
41	PLC function user monitor 2	○	*4
42	PLC function user monitor 3	○	*4
52	PID set point		*4
53	PID measured value		*4
54	PID deviation	○	*4
61	Motor thermal load factor		*4
62	Inverter thermal load factor		*4
64	PTC thermistor resistance		**Pr.561**
67	PID measured value 2		*4
68	Emergency drive status		65535
81	BACnet reception status		65535
82	BACnet token pass counter		65535
83	BACnet valid APDU counter		65535
84	BACnet communication error counter		65535

Setting value	Monitored item*1	Minus sign display*2	Trigger level criterion*3
85	BACnet terminal FM/CA output level		100%
86	BACnet terminal AM output level		100%
87	Remote output value 1	○	*4
88	Remote output value 2	○	*4
89	Remote output value 3	○	*4
90	Remote output value 4	○	*4
91	PID manipulated variable	○	*4
92	Second PID set point		*4
93	Second PID measured value		*4
94	Second PID deviation	○	*4
95	Second PID measured value 2		*4
96	Second PID manipulated variable	○	*4
98	Control circuit temperature	○	*4
201	*Output frequency		**Pr.84**
202	*U Phase Output Current	○	*7
203	*V Phase Output Current	○	*7
204	*W Phase Output Current	○	*7
205	*Converter Output Voltage		400 V/800 V
206	*Output Current (all three phases)		*7
207	*Excitation Current(A)		*7
208	*Torque Current(A)		*7
209	Terminal 2		100%
210	Terminal 4		100%
211	Terminal 1	○	100%
212	*Excitation Current (%)	○	100%
213	*Torque Current (%)	○	100%
230	*Output Frequency (signed)	○	**Pr.84**
231	*Motor Speed	○	*6
232	*Speed Command	○	*6
237	*Excitation Current Command	○	100%
238	*Torque Current Command	○	100%

1 "" shows a monitored item with a high-speed sampling cycle.
*2 "○" shows that the display with a minus sign is available.
*3 Indicates a criterion at 100% when the analog trigger is set.
*4 Refer to Terminal FM, CA, AM Full-scale value (**page 274**).
*5 Monitoring is available only for standard models.
*6 Rated motor frequency × 120 / number of motor poles
*7 The reference current for the trigger level is as follows.

Model FR-F820-[]	00046	00077	00105	00167	00250	00340	00490	00630	00770	00930	01250	01540	01870	02330	03160	03800	04750
	0.75K	1.5K	2.2K	3.7K	5.5K	7.5K	11K	15K	18.5K	22K	30K	37K	45K	55K	75K	90K	110K
Trigger level reference current (A)	3	5	8	11	17.5	24	33	46	61	76	90	115	145	175	215	288	346

Model FR-F840-[]	00023	00038	00052	00083	00126	00170	00250	00310	00380	00470	00620	00770	00930	01160	01800	02160	02600	03250	03610	04320	04810	05470	06100	06830
	0.75K	1.5K	2.2K	3.7K	5.5K	7.5K	11K	15K	18.5K	22K	30K	37K	45K	55K	75K	90K	110K	132K	160K	185K	220K	250K	280K	315K
Trigger level reference current (A)	1.5	2.5	4	6	9	12	17	23	31	38	44	57	71	86	110	144	180	216	260	325	361	432	481	547

Model FR-F842-[]	07700	08660	09620	10940	12120
	355K	400K	450K	500K	560K
Trigger level reference current (A)	610	683	770	866	962

◆Digital source (monitored item) selection

- Select the digital sources (input/output signals) to be set to **Pr.1038 to Pr.1045** from the table below. When a value other than the below, 0 (OFF) is applied for display.

Setting value	Signal name	Remarks
0	—	—
1	STF	For the details of the signals, refer to page 329.
2	STR	
3	AU	
4	RT	
5	RL	
6	RM	
7	RH	
8	JOG	
9	MRS	
10	STP (STOP)	
11	RES	
12	CS	
21	X0	For the details of the signals, refer to the Instruction Manual of FR-A8AX (option).
22	X1	
23	X2	
24	X3	
25	X4	
26	X5	
27	X6	
28	X7	
29	X8	
30	X9	
31	X10	
32	X11	
33	X12	
34	X13	
35	X14	
36	X15	
37	DY	

Setting value	Signal name	Remarks
101	RUN	For the details of the signals, refer to page 288.
102	SU	
103	IPF	
104	OL	
105	FU	
106	ABC	
107	ABC2	
121	DO0	For the details of the signals, refer to the Instruction Manual of FR-A8AY (option).
122	DO1	
123	DO2	
124	DO3	
125	DO4	
126	DO5	
127	DO6	
128	RA1	For the details of the signals, refer to the Instruction Manual of FR-A8AR (option).
129	RA2	
130	RA3	

◆Trigger setting (Pr.1025, Pr.1035 to Pr.1037, Pr.1046, Pr.1047)

• Set the trigger generating conditions and trigger target channels.

Pr.1025 setting	Trigger generating conditions	Selection of trigger target channel
0	Trace starts when inverter enters an fault status (protective function activated)	—
1	Trace starts when analog monitor satisfies trigger conditions	**Pr.1035**
2	Trace starts when digital monitor satisfies trigger conditions	**Pr.1046**
3	Trace starts when either of analog or digital monitor satisfies trigger conditions (OR)	**Pr.1035, Pr.1046**
4	Trace starts when both of analog or digital monitor satisfies trigger conditions (AND)	**Pr.1035, Pr.1046**

• Set the trigger generation conditions for the analog monitor.

Pr.1036 setting	Trigger generation conditions	Trigger level setting
0	Sampling starts when the analog data targeted for the trigger exceeds the value specified at the trigger level	Set the trigger level by **Pr.1037** (-400% to 400%)*1
1	Sampling starts when the analog data targeted for the trigger has fallen below the value specified at the trigger level	

*1 For **Pr.1037**, set the number obtained by adding 1,000 to the trigger level.

• Set the trigger generation conditions for the digital monitor.

Pr.1047 setting	Trigger generation conditions
0	Trace starts when the digital data targeted for the trigger turns ON
1	Trace starts when the digital data targeted for the trigger turns OFF

◆Start of sampling and copying of data (Pr.1020, Pr.1024)

- Set the trace operation. The trace operation is set by one of two ways, by setting **Pr.1020 Trace operation selection** and by setting in the trace mode on the operation panel.
- When "1" is set in **Pr.1020**, sampling is started.
- When "2" is set in **Pr.1020**, a trigger is regarded as having been generated (for instance, a forced trigger), sampling is stopped and the trace is started.
- When "3" is set in **Pr.1020**, sampling is stopped.
- When "4" is set in **Pr.1020**, the trace data in internal RAM is transferred to a USB memory device. (Trace data cannot be transferred during sampling.)
- To automatically start sampling when the power supply is turned ON or at a recovery after an inverter reset, set "1" to **Pr.1024 Sampling auto start**.

Pr.1020 setting	Setting by trace mode	Operation
0	0---	Sampling standby
1	1RUN	Sampling start
2	2TRG	Forced trigger (sampling stop)
3	3END	Sampling stop
4	4CPY	Data transmission

- Trace operation can also be set in the trace mode on the operation panel.

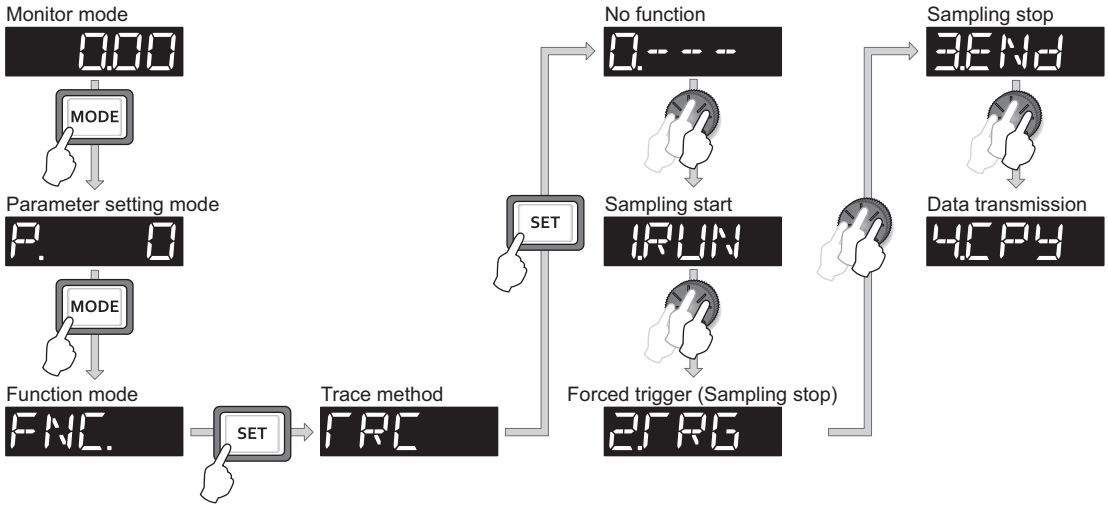

◆Selection of trace operation by input terminal (TRG signal, TRC signal)

- Trace operation can be selected by signal inputs.
- A forced trigger can be applied when the Trace trigger input (TRG) signal is ON.
- Sampling is started and stopped by the Trace sampling start/end (TRC) signal turning ON and OFF, respectively.
- To input the TRG signal, set "46" in any of **Pr.178 to Pr.189 (input terminal function selection)**, and to input the TRC signal, set "47" to assign the function to a terminal.

NOTE

- Changing the terminal assignment using **Pr.178 to Pr.189 (input terminal function selection)** may affect the other functions. Set parameters after confirming the function of each terminal.

◆Monitoring the trace status

- The trace status can be monitored on the operation panel by setting "38" in **Pr.52 Operation panel main monitor selection, Pr.774 to Pr.776 (Operation panel monitor selection), or Pr.992 Operation panel setting dial push monitor selection.**

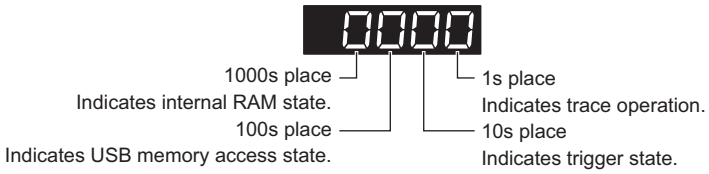

Monitor value	Trace status			
	1000s place	100s place	10s place	1s place
0 or no display*1	No trace data in internal RAM	USB memory not accessed	Trigger not detected	Trace stopped
1	Trace data in internal RAM	USB memory being accessed	Trigger detected	Trace operation
2	—	USB memory transfer error	—	—
3	—	USB buffer overrun	—	—

*1 The "0(s)" to the left of the leftmost non-zero digit is(are) not shown in the monitor display.
For example, if no trace data is in internal RAM, the USB memory is not accessed, no trigger is detected, and the trace operation is performed, "1" appears (not "0001").

- When copying the traced data to a USB memory device, the operating status of the USB host can be checked with the inverter LED. For the overview of the USB communication function, refer to **page 61**.

LED status	Operating status
OFF	No USB connection.
ON	The communication is established between the inverter and the USB device.
Flickering rapidly	Traced data is being transmitted. (In the memory mode, transmission command is being issued. In the recorder mode, sampling is being performed.)
Flickering slowly	Error in the USB connection.

- During trace operation, the trace status signal (Y40) can be output.
  To use the Y40 signal, set "40 (positive logic) or 140 (negative logic)" in any of **Pr.190 to Pr.196 (output terminal function selection)** to assign the function to the output terminal.

NOTE

- Changing the terminal assignment using **Pr.190 to Pr.196 (output terminal function selection)** may affect the other functions. Set parameters after confirming the function of each terminal.

Parameters referred to

Pr.52 Operation panel main monitor selection page 263
Pr.178 to Pr.189 (input terminal function selection) page 329

5.12 (N) Operation via communication and its settings

Purpose	Parameter to set			Refer to page
To start operation via communication	Initial setting of operation via communication	P.N000, P.N001, P.N013, P.N014	Pr.549, Pr.342, Pr.502, Pr.779	446
To operate via communication from PU connector	Initial setting of computer link communication (PU connector)	P.N020 to P.N028	Pr.117 to Pr.124	449
To operate via communication from RS-485 terminals	Initial setting of computer link communication (RS-485 terminals)	P.N030 to P.N038	Pr.331 to Pr.337, Pr.341	
	Modbus-RTU communication specification	P.N002, P.N030, P.N031, P.N034, P.N080,	Pr.539, Pr.331, Pr.332, Pr.334, Pr.343,	465
	BACnet MS/TP protocol	P.N030, P.N031, P.N050 to P.N054	Pr.331, Pr.332, Pr.390, Pr.726 to Pr.729	
To Communicate using USB (FR Configurator2)	USB communication	P.N040, P.N041	Pr.547, Pr.548	449
To connect a GOT	GOT automatic recognition	P.N020, P.N030	Pr.117, Pr.331	494

5.12.1 Wiring and configuration of PU connector

Using the PU connector enables communication operation from a personal computer, etc.
When the PU connector is connected with a personal, FA or other computer by a communication cable, a user program can run and monitor the inverter or read and write to parameters.

◆PU connector pin-outs

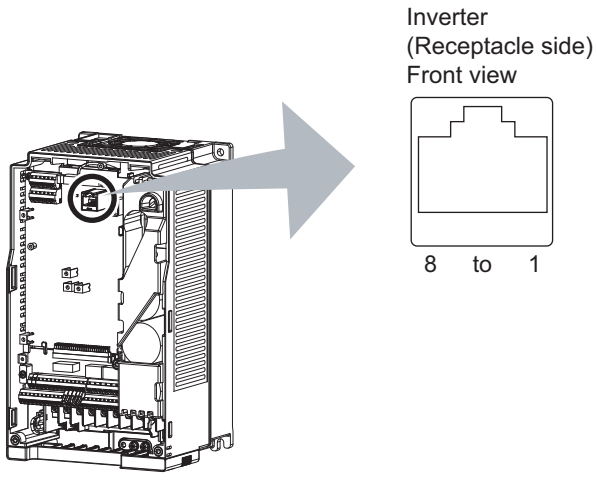

Pin number	Name	Description
1	SG	Earth (ground) (connected to terminal 5)
2	—	Operation panel power supply
3	RDA	Inverter receive+
4	SDB	Inverter send-
5	SDA	Inverter send+
6	RDB	Inverter receive-
7	SG	Earth (ground) (connected to terminal 5)
8	—	Operation panel power supply

NOTE

- Pins No. 2 and 8 provide power to the operation panel or the parameter unit. Do not use these pins during RS-485 communication.
- Do not connect the PU connector to the computer's LAN board, FAX modem socket or telephone modular connector. The product could be damaged due to differences in electrical specifications.

◆Wiring and configuration of PU connector communication system

• System configuration

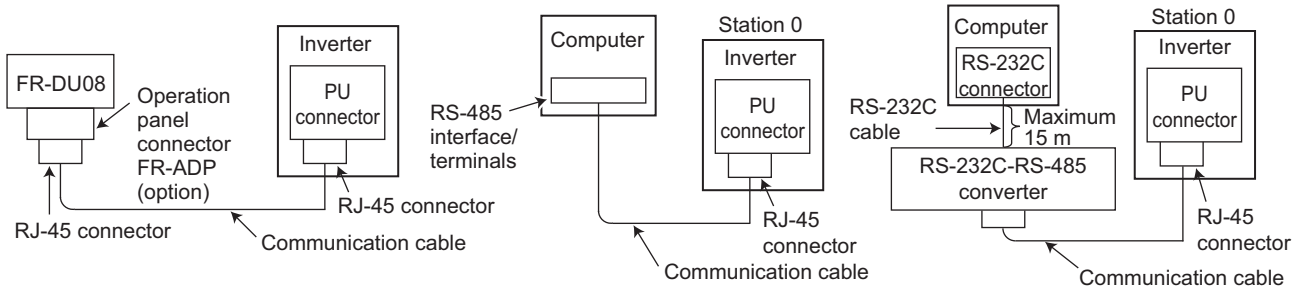

• Wiring of computer by RS-485

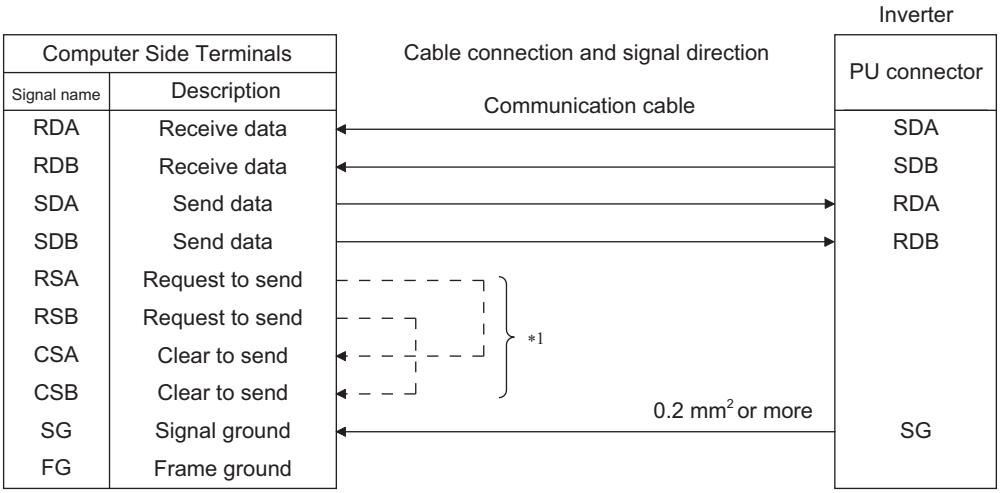

*1 Make connection in accordance with the Instruction Manual of the computer to be used with. Fully check the terminal numbers of the computer since they vary with the model.

NOTE

• When performing RS-485 communication with multiple inverters, use the RS-485 terminals. (Refer to page 444.)

• Computer-inverter connection cable

Refer to the following for the connection cable (RS-232C ⇔ RS-485 converter) between the computer with an RS-232C interface and an inverter. Commercially available products (as of Novemver 2013)

Model	Manufacturer
Interface embedded cable DAFXIH-CAB (D-SUB25P for personal computer side) DAFXIH-CABV (D-SUB9P for personal computer side) + Connector conversion cable DINV-485CAB (for inverter side) *2	Diatrend Corp.
Interface embedded cable dedicated for inverter DINV-CABV *2	

*2 The conversion cable cannot connect multiple inverters. (The computer and inverted are connected in a 1:1 pair.) This product is a RS-232C ⇔ RS-485 conversion cable that has a built-in converter. No additional cable or connector is required. For the product details, contact the manufacturer.

• Refer to the following table when fabricating the cable on the user side.

Commercially available products (as of November 2013)

Name	Model	Manufacturer
Communication cable	SGLPEV-T (Cat5e/300m) 24AWG × 4P*3	Mitsubishi Cable Industries, Ltd.
RJ-45 connector	5-554720-3	Tyco Electronics

*3 Do not use pins No. 2 and 8 of the communication cable.

5.12.2 Wiring and configuration of RS-485 terminals

◆RS-485 terminal layout

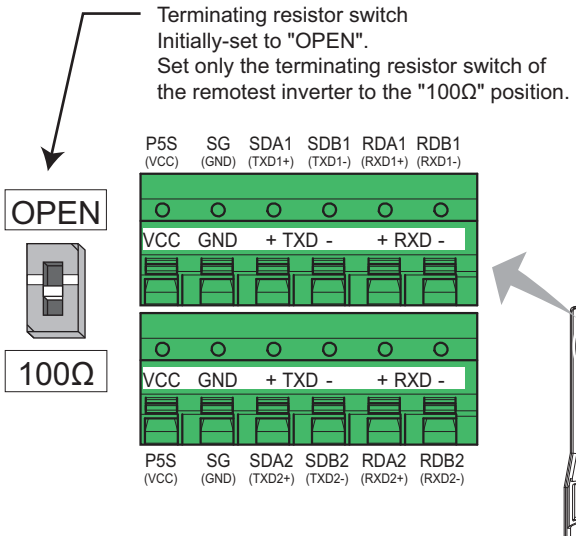

Name	Description
RDA1 (RXD1+)	Inverter receive +
RDB1 (RXD1-)	Inverter receive -
RDA2 (RXD2+)	Inverter receive + (for branch)
RDB2 (RXD2-)	Inverter receive - (for branch)
SDA1 (TXD1+)	Inverter send +
SDB1 (TXD1-)	Inverter send -
SDA2 (TXD2+)	Inverter send + (for branch)
SDB2 (TXD2-)	Inverter send - (for branch)
P5S (VCC)	5V Permissible load current 100 mA
SG (GND)	Earthing (grounding) (connected to terminal SD)

◆Connection of RS-485 terminals and wires

- The size of RS-485 terminal block is the same as the control circuit terminal block.Refer to page 52 for the wiring method.

NOTE

- To avoid malfunction, keep the RS-485 terminal wires away from the control circuit board.
- When the FR-F820-01250(30K) or lower, or the FR-F840-00620(30K) or lower is used with a plug-in option, lead the wires through the hole on the side face of the front cover for wiring of the RS-485 terminals.

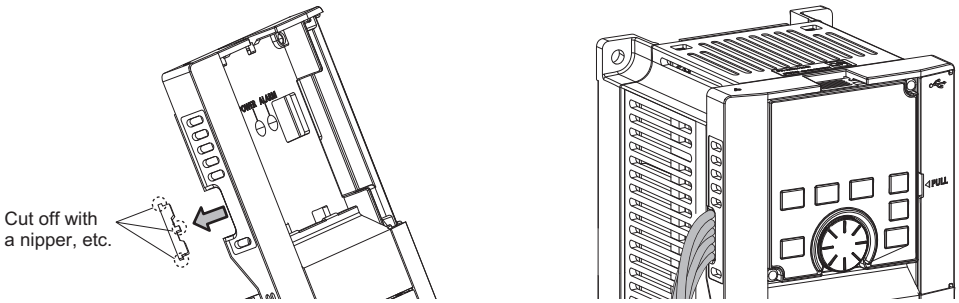

- When the FR-F820-01540(37K) of higher, or the FR-F840-00770(37K) or higher is used with a plug-in option, lead the wires on the left side of the plug-in option for wiring of the RS-485 terminals.

◆System configuration of RS-485 terminals

• Computer and inverter connection (1:1)

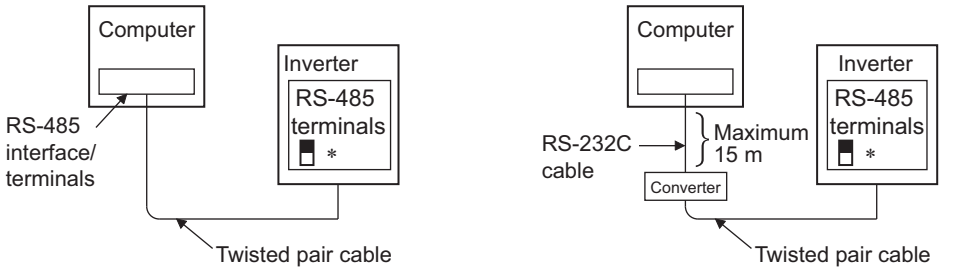

*Set the terminating resistor switch to the "100 Ω" position.

• Combination of computer and multiple inverters (1:n)

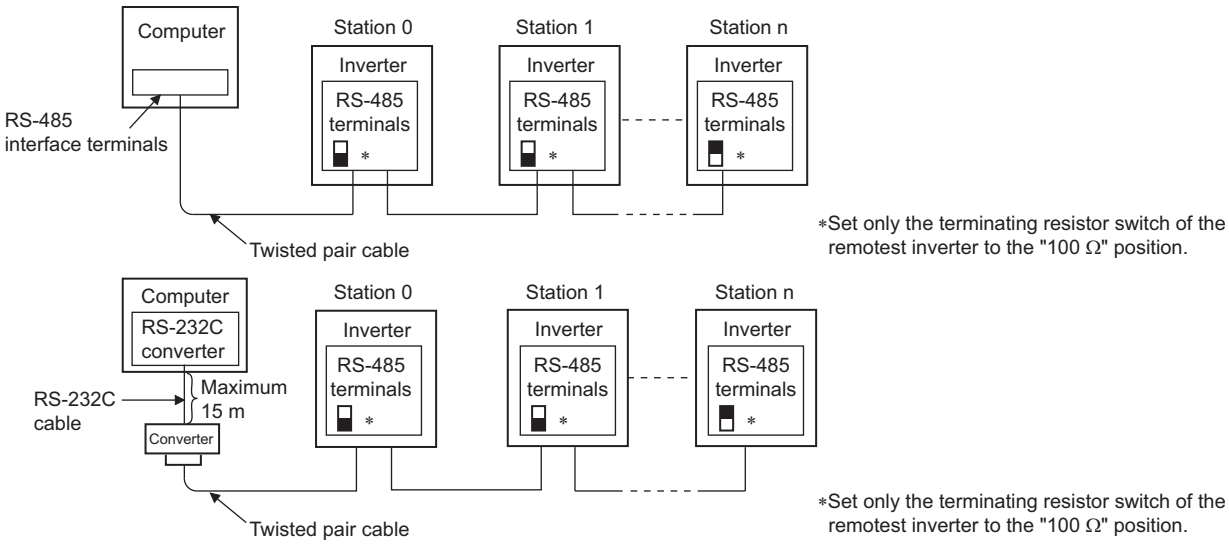

◆How to wire RS-485 terminals

• 1 inverter and 1 computer with RS-485 terminals

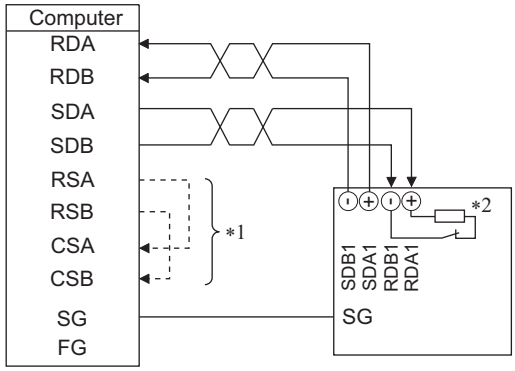

• Multiple inverters and 1 computer with RS-485 terminals

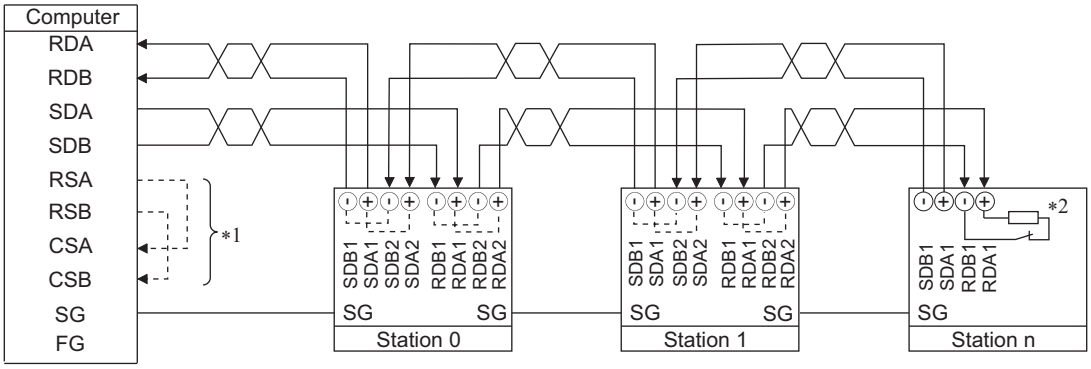

∗1 Make connection in accordance with the Instruction Manual of the computer to be used with.
Fully check the terminal numbers of the computer since they vary with the model.

∗2 For the inverter farthest from the computer, set the terminating resistor switch to ON (100 Ω side).

NOTE

• For branching, connect the wires as shown below.

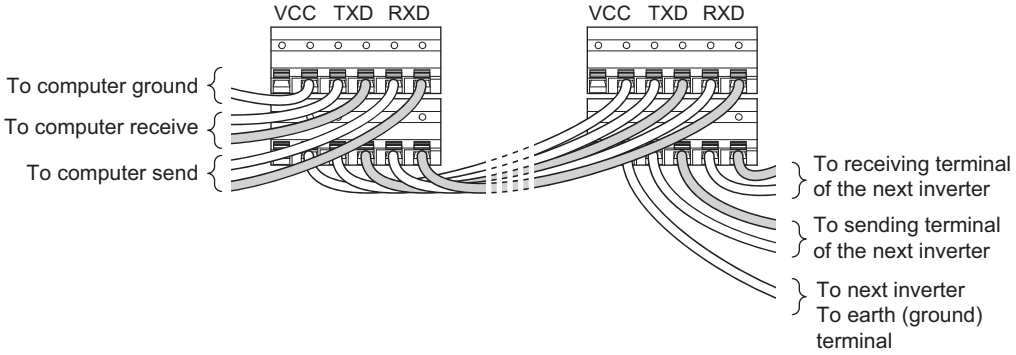

◆Two-wire type connection

• If the computer is 2-wire type, a connection from the inverter can be changed to 2-wire type by passing wires across reception terminals and transmission terminals of the RS-485 terminals.

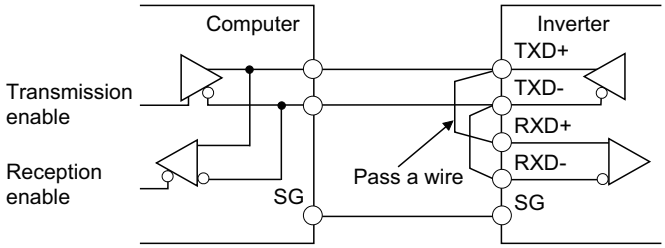

NOTE

• A program should be created so that transmission is disabled (receiving state) when the computer is not sending and reception is disabled (sending state) during sending to prevent the computer from receiving its own data.

5.12.3 Initial setting of operation via communication

Set the action when the inverter is performing operation via communication.

- Set the communication protocol. (Mitsubishi inverter protocol/Modbus-RTU protocol)
- Set the action at fault occurrence or at writing of parameters

Pr.	Name	Initial value	Setting range	Description	
549 N000	**Protocol selection**	0	0	Mitsubishi inverter protocol (computer link)	
			1	Modbus-RTU protocol	
			2	BACnet MS/TP protocol	
342 N001	**Communication EEPROM write selection**	0	0	Parameter values written by communication are written to the EEPROM and RAM.	
			1	Parameter values written by communication are written to the RAM.	
502 N013	**Stop mode selection at communication error**	0		**At fault occurrence**	**At fault removal**
			0	Coasts to stop E.SER display*1 ALM signal output	Stays stopped (E.SER display*1)
			1	Deceleration stop E.SER display after stop*1 ALM signal output after stop	Stays stopped (E.SER display*1)
			2	Deceleration stop E.SER display after stop*1	Automatic restart function
			3	Operation continued at the set frequency of **Pr.779**	Normal operation
779 N014	**Operation frequency during communication error**	9999	0 to 590 Hz	Set the frequency to be run at a communication error occurrence.	
			9999	The motor runs at the frequency used before the communication error.	

*1 If in communication by the communication option, E.OP1 is displayed.

◆Setting the communication protocol (Pr.549)

- Select the communication protocol.
- The Modbus-RTU protocol can be used by communication from the RS-485 terminals.

Pr.549 setting	Communication protocol
0 (initial value)	Mitsubishi inverter protocol (computer link)
1	Modbus-RTU protocol
2	BACnet MS/TP protocol

◆Communication EEPROM write selection (Pr.342)

- When parameter write is performed via the inverter PU connector, RS-485 terminal, USB communication, or a communication option, the parameters storage device can be changed from EEPROM + RAM to RAM only. Use this function if parameter settings are changed frequently.
- When changing the parameter values frequently, set "1" in **Pr.342 Communication EEPROM write selection** to write them to the RAM only. The life of the EEPROM will be shorter if parameter write is performed frequently with the setting unchanged from "0 (initial value)" (EEPROM write).

NOTE

- Turning OFF the inverter's power supply clears the modified parameter settings when **Pr.342** = "1 (write only to RAM)". Therefore, the parameter values at next power-ON are the values last stored in EEPROM.
- The parameter setting written in RAM cannot be checked on the operation panel. (The values displayed on the operation panel are the ones stored in EEPROM.)

◆Operation selection at a communication error (Pr.502, Pr.779)

- For communication using RS-485 terminals or a communication option, operation at a communication error can be selected. The operation is active under the Network operation mode.
- Select the stop operation at the retry count excess (**Pr.335**, only with Mitsubishi inverter protocol) or at a signal loss detection **(Pr.336, Pr.539)**.
- When a communication error is detected while communication with the RS-485 terminals is performed, the alarm (LF) signal is output to an output terminal of the inverter. To use the LF signal, set "98 (positive logic) or 198 (negative logic)" in any of **Pr.190 to Pr.196** (output terminal function selection) to assign the function to the output terminal. (While communication is performed with a communication option, LF signal is output only when "3" is set in **Pr.502**.)

Pr.502 setting	At fault occurrence			At fault removal		
	Operating status	Indication	Fault (ALM) signal	Operating status	Indication	Fault (ALM) signal
0 (initial value)	Coasts to stop	E.SER*1	ON	Stop status continues	E.SER*1	ON
1	Deceleration stop	E.SER after stop*1	ON after stop			
2			OFF	Automatic restart function*2	Normal display	OFF
3	Operation continued at the set frequency of **Pr.779**	Normal display	OFF	Normal operation	Normal display	OFF

*1 If in communication by the communication option, E.OP1 is displayed.
*2 When the communication error is removed during deceleration, the motor re-accelerates.

Pr. 502 setting "0" (initial value)

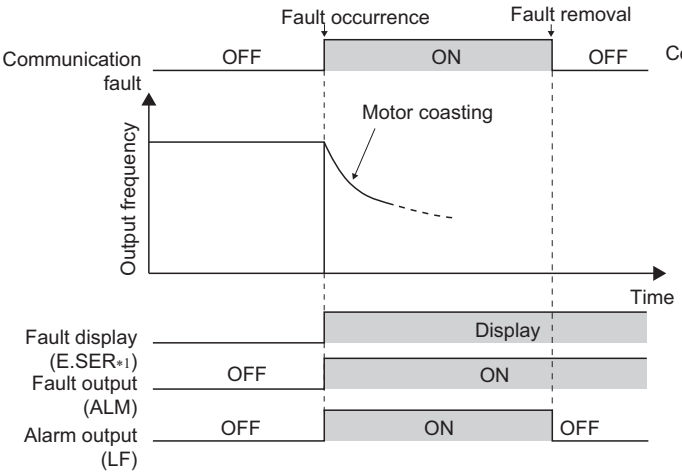

Pr. 502 setting "1"

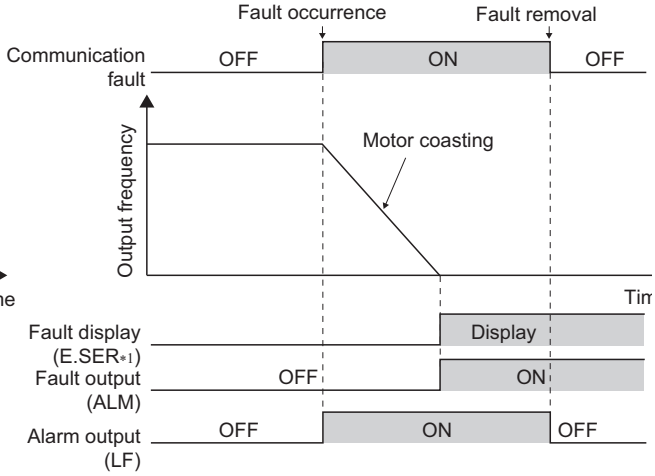

Pr. 502 setting "2"

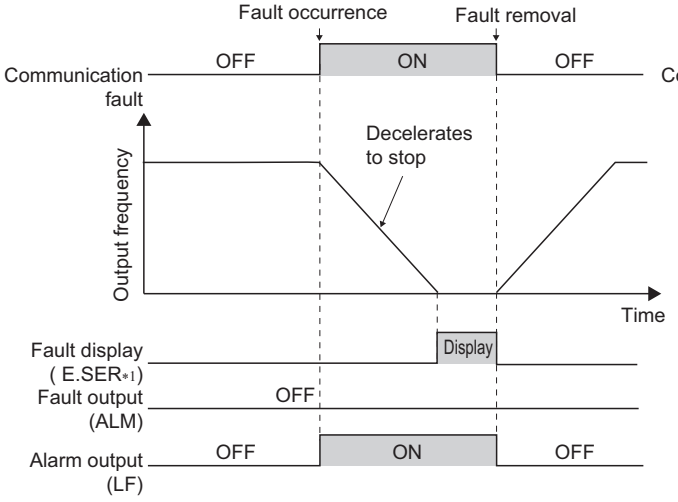

Pr. 502 setting "3"

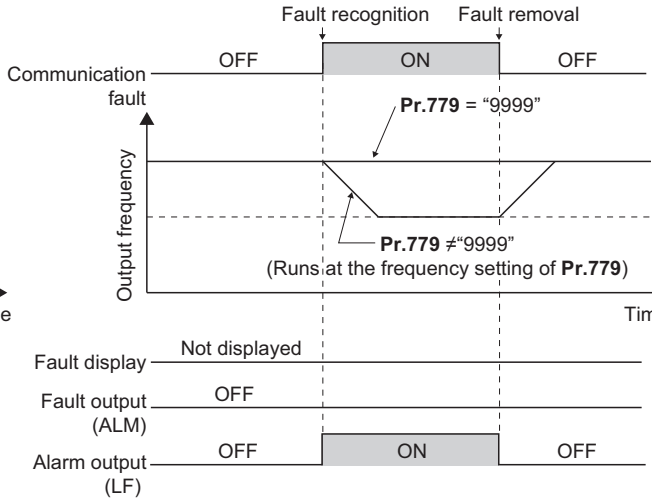

*1 If in communication by the communication option, E.OP1 is displayed.

(N) Operation via communication and its settings

NOTE

- Fault output indicates the Fault signal (ALM) and an alarm bit output.
- When the fault output is set enabled, fault records are stored in the faults history. (A fault record is written to the faults history at a fault output.)
- When the fault output is not set enabled, fault record is overwritten to the faults history of the faults history temporarily but not stored.
- After the fault is removed, the fault indication goes back to normal indication on the monitor, and the faults history goes back to the previous status.
- If **Pr.502** is set to "1, 2, or 3", the normal deceleration time setting (settings like **Pr.8, Pr.44, and Pr.45**) is applied as the deceleration time. Normal acceleration time setting (settings like **Pr.7 and Pr.44**) is applied as the acceleration time for restart.
- When **Pr.502** = "2 or 3", the inverter operates with the start command and the speed command, which were used before the fault.
- If a communication line error occurs, then the error is removed during deceleration while **Pr.502** = "2", the motor re-accelerates from that point.
- The **Pr.502 and Pr.779** settings are valid when communication is performed via the RS-485 terminals or a communication option.
- These parameters are valid under the Network operation mode. When performing communication with RS-485 terminals, set **Pr.551 PU mode operation command source selection** to "2 (initial value)".
- **Pr.502** is valid for the device that has the command source under the Network operation mode. If a communication option is installed while **Pr.550** = "9999 (initial value)", a communication error in RS-485 terminals occurs and **Pr.502** becomes invalid.
- If the communication error setting is disabled with **Pr.502** = "3", **Pr.335** = "9999", and **Pr.539** = "9999", the inverter does not continue its operation with the frequency set by **Pr.779** at a communication error.
- If a communication error occurs while continuous operation at **Pr.779** is selected with **Pr.502** = "3", the inverter operates at the frequency set in **Pr.779** even though the speed command source is at the external terminals.
  Example) If a communication error occurs while **Pr.339** = "2" and the external terminal RL is ON, the operation is continued at the frequency set in **Pr.779**.

Parameters referred to

Pr.7 Acceleration time, Pr.8 Deceleration time page 187
Pr.335 RS-485 communication retry count page 449
Pr.336 RS-485 communication check time interval page 449
Pr.539 Modbus-RTU communication check time interval page 465
Pr.550 NET mode operation command source selection page 210
Pr.551 PU mode operation command source selection page 210

5.12.4 Initial settings and specifications of RS-485 communication

Use the following parameters to perform required settings for the RS-485 communication between the inverter and a personal computer.

- There are two types of communication, communication using the inverter's PU connector and communication using the RS-485 terminals.
- Parameter setting, monitoring, etc. can be performed with the Mitsubishi inverter protocol, Modbus-RTU protocol, and BACnet protocol.
- To make communication between the personal computer and inverter, setting of the communication specifications must be made to the inverter in advance.
  Data communication cannot be made if the initial settings are not made or if there is any setting error.

[Parameters related to PU connector communication]

Pr.	Name	Initial value	Setting range	Description	
117 N020	**PU communication station number**	0	0 to 31	Specify the inverter station number. Set the inverter station numbers when two or more inverters are connected to one personal computer.	
118 N021	**PU communication speed**	192	48, 96, 192, 384, 576, 768, 1152	Set the communication speed. The setting value × 100 equals the communication speed. For example, if 192 is set, the communication speed is 19200 bps.	
E022	**PU communication data length**	0	0	Data length 8 bits	
			1	Data length 7 bits	
E023	**PU communication stop bit length**	1	0	Stop bit length 1 bit	
			1	Stop bit length 2 bits	
119	**PU communication stop bit length / data length**	1	0	Stop bit length 1 bit	Data length 8 bits
			1	Stop bit length 2 bits	
			10	Stop bit length 1 bit	Data length 7 bits
			11	Stop bit length 2 bits	
120 N024	**PU communication parity check**	2	0	Without parity check	
			1	With parity check at odd numbers	
			2	With parity check at even numbers	
121 N025	**Number of PU communication retries**	1	0 to 10	Set the permissible number of retries for unsuccessful data reception. If the number of consecutive errors exceeds the permissible value, the inverter will trip.	
			9999	If a communication error occurs, the inverter will not trip.	
122 N026	**PU communication check time interval**	9999	0	No PU connector communication	
			0.1 to 999.8 s	Set the interval of the communication check (signal loss detection) time. If a no-communication state persists for longer than the permissible time, the inverter will trip.	
			9999	No communication check (signal loss detection)	
123 N027	**PU communication waiting time setting**	9999	0 to 150 ms	Set the waiting time between data transmission to the inverter and the response.	
			9999	Set with communication data.	
124 N028	**PU communication CR/LF selection**	1	0	Without CR/LF	
			1	With CR	
			2	With CR/LF	

(N) Operation via communication and its settings

[Parameters related to communication with the RS-485 terminals]

Parameter number	Name	Initial value	Setting range	Description
331 **N030**	**RS-485 communication station number**	0	0 to 31 (0 to 247) *1*2	Set the inverter station number. (Same specifications as **Pr.117**)
332 **N031**	**RS-485 communication speed**	96	3, 6, 12, 24, 48, 96, 192, 384, 576, 768, 1152*3	Select the communication speed. (Same specifications as **Pr.118**)
N032	**RS-485 communication data length**	0	0, 1	Select the data length. (Same specifications as **P.E022**)*4
N033	**RS-485 communication stop bit length**	1	0, 1	Select the stop bit length. (Same specifications as **P.E023**)*5
333	**RS-485 communication stop bit length / data length**	1	0, 1, 10, 11	Select the stop bit length and data bit length. (Same specifications as **Pr.119**)*4*5
334 **N034**	**RS-485 communication parity check selection**	2	0, 1, 2	Select the parity check specifications. (Same specifications as **Pr.120**)
335 **N035***6	**RS-485 communication retry count**	1	0 to 10, 9999	Set the permissible number of retries for unsuccessful data reception. (Same specifications as **Pr.121**)
336 **N036***6	**RS-485 communication check time interval**	0 s	0	RS-485 communication is available, but the inverter trips in the NET operation mode.
			0.1 to 999.8 s	Set the interval of the communication check (signal loss detection) time. (Same specifications as **Pr.122**)
			9999	No communication check (signal loss detection)
337 **N037***6	**RS-485 communication waiting time setting**	9999	0 to 150 ms, 9999	Set the waiting time between data transmission to the inverter and the response. (Same specifications as **Pr.123**)
341 **N038***6	**RS-485 communication CR/LF selection**	1	0, 1, 2	Select the presence/absence of CR/LF. (Same specifications as **Pr.124**)

*1 When "1" (Modbus-RTU protocol) is set in **Pr.549**, the setting range within parentheses is applied.

*2 When a value outside the setting range is set, the inverter operates at the initial value.

*3 When **Pr.549** = "2" (BACnet MS/TP protocol), the setting range is "96 to 1152".

*4 In the Modbus-RTU protocol, the data length is fixed at 8 bits.

*5 In the Modbus-RTU protocol, **Pr.334** setting is applied as the stop bit length. (Refer to **page 465**.)

*6 In the Modbus-RTU protocol, this is invalid.

NOTE

- The monitored items and parameter settings can be read during communication with the **Pr.336 RS-485 communication check time interval** = "0 (initial value)" setting, but such operation will become faulty once the operation mode is changed to the NET operation mode. When the NET operation mode is selected as the start-up operation mode, communication is performed once, then a Communication fault (inverter) (E.SER) occurs. To perform operation or parameter writing via communication, set "9999" or a large setting value in **Pr.336**. (The setting value is determined by the computer program.)(Refer to **page 457**.)
- Always reset the inverter after making the initial settings of the parameters. After changing the communication-related parameters, communication cannot be made until the inverter is reset.

5.12.5 Mitsubishi inverter protocol (computer link communication)

Parameter settings and monitoring are possible by using the Mitsubishi inverter protocol (computer link communication) via inverter PU connector and the RS-485 terminals.

◆Communication specifications

• The communication specifications are given below.

Item		Description	Related Parameter
Communication protocol		Mitsubishi protocol (computer link)	**Pr.551**
Conforming standard		EIA-485 (RS-485)	—
Connectable units		1:N (maximum 32 units), setting is 0 to 31 stations	**Pr.117** **Pr.331**
Communication Speed	PU connector	Selected among 4800/9600/19200/38400 bps	**Pr.118**
	RS-485 terminals	Selected among 300/600/1200/2400/4800/9600/19200/38400/38400/57600/76800/115200 bps	**Pr.332**
Control procedure		Asynchronous system	—
Communication method		Half-duplex system	—
Communication specifications	Character system	ASCII (7 bits or 8 bits can be selected.)	**Pr.119** **Pr.333**
	Start bit	1 bit	—
	Stop bit length	1 bit or 2 bits can be selected.	**Pr.119** **Pr.333**
	Parity check	Check (at even or odd numbers) or no check can be selected.	**Pr.120** **Pr.334**
	Error check	Sum code check	—
	Terminator	CR/LF (presence/absence selectable)	**Pr.124** **Pr.341**
Waiting time setting		Selectable between presence and absence	**Pr.123** **Pr.337**

◆Communication procedure

• Data communication between the computer and inverter is made in the following procedure.

(a) Request data is sent from the computer to the inverter. (The inverter will not send data unless requested.)

(b) After waiting for the waiting time,

(c) The inverter sends reply data to the computer in response to the computer request.

(d) After waiting for the inverter data processing time,

(e) An answer from the computer in response to reply data (c) of the inverter is transmitted. (Even if (e) is not sent, subsequent communication is made properly.)

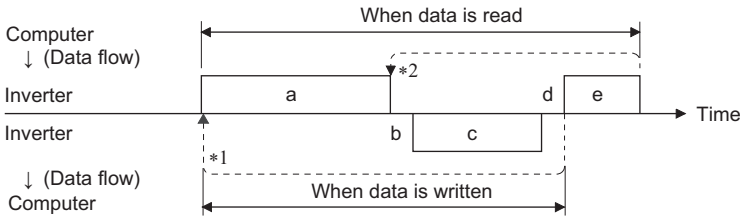

*1 If a data error is detected and a retry must be made, perform retry operation with the user program. The inverter trips if the number of consecutive retries exceeds the parameter setting.

*2 On receipt of a data error occurrence, the inverter returns reply data (c) to the computer again. The inverter trips if the number of consecutive data errors reaches or exceeds the parameter setting.

◆Communication operation presence/absence and data format types

- Data communication between the computer and inverter is made in ASCII code (hexadecimal code).
- Communication operation presence/absence and data format types are as follows.

Symbol	Operation		Operation command	Operation frequency	Multi command	Parameter write	Inverter reset	Monitor	Parameter read
a	Communication request is sent to the inverter in accordance with the user program in the computer.		A, A1	A	A2	A	A	B	B
b	Inverter data processing time		With	With	With	With	Without	With	With
c	Reply data from the inverter (Data (a) is checked for an error)	No error *1 (Request accepted)	C	C	C1*3	C	C*2	E, E1, E2, E3	E
		With error (Request rejected)	D	D	D	D	D*2	D	D
d	Computer processing delay time		10 ms or more						
e	Answer from computer in response to reply data c (Data c is checked for error)	No error *1 (No inverter processing)	Without	Without	Without (C)	Without	Without	Without (C)	Without (C)
		With error (Inverter outputs c again.)	Without	Without	F	Without	Without	F	F

*1 In the communication request data from the computer to the inverter, 10 ms or more is also required after "no data error (ACK)". (Refer to page 455.)

*2 Reply from the inverter to the inverter reset request can be selected. (Refer to page 460.)

*3 At mode error, and data range error, C1 data contains an error code. (Refer to page 464) Except for those errors, the error is returned with data format D.

- Data writing format

a. Communication request data from the computer to the inverter

Format	Number of characters																		
	1	2	3	4	5	6	7	8	9	10	11	12	13	14	15	16	17	18	19
A	ENQ *1	Inverter station No. *2		Instruction code		*3	Data				Sum check		*4						
A1	ENQ *1	Inverter station No. *2		Instruction code		*3	Data			Sum check		*4							
A2	ENQ *1	Inverter station No. *2		Instruction code		*3	Send data type	Receive data type	Data1				Data2				Sum check		*4

c. Reply data from the inverter to the computer (No data error detected)

Format	Number of characters																		
	1	2	3	4	5	6	7	8	9	10	11	12	13	14	15	16	17	18	19
C	ACK *1	Inverter station No. *2		*4															
C1	STX *1	Inverter station No. *2		Send data type	Receive data type	Error code 1	Error code 2	Data1				Data2				ETX *1	Sum check		*4

c. Reply data from the inverter to the computer(Data error detected)

Format	Number of characters				
	1	2	3	4	5
D	NAK*1	Inverter station No. *2		Error code	*4

*1 Indicates a control code.

*2 Specifies the inverter station numbers in the range of H00 to H1F (stations 0 to 31) in hexadecimal.

*3 When **Pr.123 or Pr.337 (Waiting time setting)** ≠ 9999, create a communication request data without "waiting time" in the data format. (The number of characters decreases by 1.)

*4 CR, LF code: When data is transmitted from the computer to the inverter, codes CR (carriage return) and LF (line feed) are automatically set at the end of a data group on some computers. In this case, setting must be also made on the inverter according to the computer. Whether the CR and LF codes will be present or absent can be selected using **Pr.124 or Pr.341 (CR/LF selection)**.

• Data reading format

a. Communication request data from the computer to the inverter

Format	Number of characters								
	1	2	3	4	5	6	7	8	9
B	ENQ *1	Inverter station No. *2		Instruction code		*3	Sum check		*4

c. Reply data from the inverter to the computer (No data error detected)

Format	Number of characters												
	1	2	3	4	5	6	7	8	9	10	11	12	13
E	STX*1	Inverter station No. *2		Read data				ETX*1	Sum check		*4		
E1	STX*1	Inverter station No. *2		Read data		ETX*1	Sum check		*4				
E2	STX*1	Inverter station No. *2		Read data						ETX*1	Sum check		*4

Format	Number of characters							
	1	2	3	4 to 23	24	25	26	27
E3	STX*1	Inverter station No. *2		Read data (Inverter model information)	ETX*1	Sum check		*4

c. Reply data from the inverter to the computer (Data error detected)

Format	Number of characters				
	1	2	3	4	5
D	NAK*1	Inverter station No. *2		Error code	*4

e. Transmission data from the computer to the inverter when reading data

Format	Number of characters			
	1	2	3	4
C (No data error detected)	ACK*1	Inverter station No. *2		*4
F (Data error detected)	NAK*1	Inverter station No. *2		*4

*1 Indicates a control code.

*2 Specifies the inverter station numbers in the range of H00 to H1F (stations 0 to 31) in hexadecimal.

*3 When **Pr.123 or Pr.337 (Waiting time setting)** ≠ 9999, create a communication request data without "waiting time" in the data format. (The number of characters decreases by 1.)

*4 CR, LF code: When data is transmitted from the computer to the inverter, codes CR (carriage return) and LF (line feed) are automatically set at the end of a data group on some computers. In this case, setting must be also made on the inverter according to the computer. Whether the CR and LF codes will be present or absent can be selected using **Pr.124 or Pr.341 (CR/LF selection)**.

◆Data definitions

• Control code

Signal name	ASCII Code	Description
STX	H02	Start Of Text (Start of data)
ETX	H03	End Of Text (End of data)
ENQ	H05	Enquiry (Communication request)
ACK	H06	Acknowledge (No data error detected)
LF	H0A	Line Feed
CR	H0D	Carriage Return
NAK	H15	Negative Acknowledge (Data error detected)

• Inverter station number

Specify the station number of the inverter which communicates with the computer.

• Instruction code

Specify the processing request, for example, operation or monitoring, given by the computer to the inverter. Hence, the inverter can be run and monitored in various ways by specifying the instruction code appropriately. (Refer to page 460.)

• Data

Indicates the data such as frequency and parameters transferred to and from the inverter. The definitions and ranges of set data are determined in accordance with the instruction codes. (Refer to page 460.)

• Waiting time

Specify the waiting time between the receipt of data at the inverter from the computer and the transmission of reply data. Set the waiting time in accordance with the response time of the computer in the range of 0 to 150 ms in 10 ms increments. (For example; 1=10 ms, 2= 20 ms)

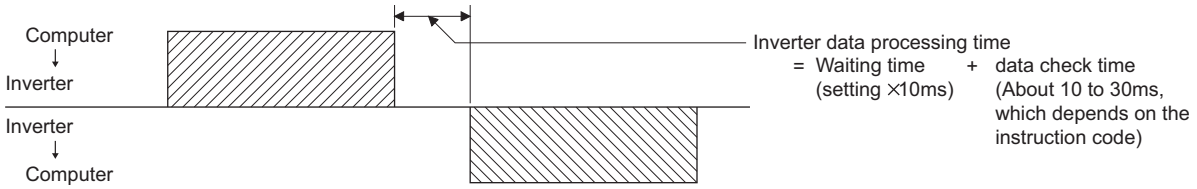

NOTE

- When **Pr.123 or Pr.337 (Waiting time setting)** ≠ "9999", create a communication request data without "waiting time" in the data format. (The number of characters decreases by 1.)
- The data check time varies depending on the instruction code. (Refer to page 455.)

• Sum check code

The sum check code is a 2-digit ASCII (hexadecimal) representing the lower 1 byte (8 bits) of the sum (binary) derived from the checked ASCII data.

(Example 1)

Computer→ Inverter

	ENQ	Station number		Instruction code		*Waiting time	Data				Sum check code		
		0	1	E	1	1	0	7	A	D	F	4	←Binary code
ASCII Code →	H05	H30	H31	H45	H31	H31	H30	H37	H41	H44	H46	H34	

H30+H31+H45+H31+H31+H30+H37+H41+H44

= H1F4

Sum

*When the **Pr.123 or Pr.337 (Waiting time setting)** ≠ "9999", create the communication request data without "waiting time" in the data format. (The number of characters decreases by 1.)

(Example 2)

Inverter → Computer

	STX	Station number		Data read				ETX	Sum check code		
		0	1	1	7	7	0		3	0	←Binary code
ASCII Code →	H02	H30	H31	H31	H37	H37	H30	H03	H33	H30	

H30+H31+H31+H37+H37+H30

= H130

Sum

• Error code

If any error is found in the data received by the inverter, its error definition is sent back to the computer together with the NAK code.

Error Code	Error Item	Error Description	Inverter Operation
H0	Computer NAK error	The number of errors consecutively detected in communication request data from the computer is greater than the permissible number of retries.	Trips (E.PUE/E.SER) if error occurs continuously more than the permissible number of retries.
H1	Parity error	The parity check result does not match the specified parity.	
H2	Sum check error	The sum check code in the computer does not match that of the data received by the inverter.	
H3	Protocol error	The data received by the inverter has a grammatical mistake. Or, data receive is not completed within the predetermined time. CR or LF is not as set in the parameter.	
H4	Framing error	The stop bit length differs from the initial setting.	
H5	Overrun error	New data has been sent by the computer before the inverter completes receiving the preceding data.	
H6	——	——	——
H7	Character error	The character received is invalid (other than 0 to 9, A to F, control code).	Does not accept the received data, burt the inverter does not trip.
H8	——	——	——
H9	——	——	——
HA	Mode error	Parameter write was attempted in other than the computer link operation mode, when operation command source is not selected or during inverter operation.	Does not accept the received data, but the inverter does not trip.
HB	Instruction code error	The specified instruction code does not exist.	
HC	Data range error	Invalid data has been specified for parameter writing, running frequency setting, etc.	
HD	——	——	——
HE	——	——	——
HF	Normal (no error)	——	——

◆Response time

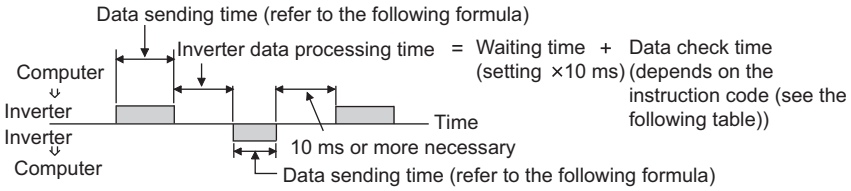

[Formula for data transmission time]

$$\frac{1}{\text{Communication speed (bps)}} \times \text{Number of data characters (Refer to page 452.)} \times \text{Communication specifications (Total number of bits)} = \text{data transmission time (s)}$$

(Refer to the following.)

•Communication specifications

Name		Number of bits
Stop bit length		1 bit 2 bits
Data Length		7 bits 8 bits
Parity check	With	1 bit
	Without	0

In addition to the above, 1 start bit is necessary.
Minimum number of total bits.9 bits
Maximum number of total bits12 bits

•Data check time

Item	Check time
Various monitors, operation command, Frequency setting (RAM)	<12 ms
Parameter read/write, Frequency setting (EEPROM)	<30 ms
Parameter clear / all clear	<5 s
Reset command	No answer

◆Retry count setting (Pr.121, Pr.335)

- Set the permissible number of retries at data receive error occurrence. (Refer to page 455 for data receive error for retry.)
- When the data receive errors occur consecutively and the number of retries exceeds the permissible number setting, a communication fault (PU connector communication: E.PUE, RS-485 terminal communication: E.SER) occurs and the inverter trips.
- When a data transmission error occurs while "9999" is set, the inverter does not trip but outputs the alarm (LF) signal. To use the LF signal, set "98 (positive logic) or 198 (negative logic)" in any of **Pr.190 to Pr.196 (output terminal function selection)** to assign the function to an output terminal.

Example: PU connector communication, **Pr. 121** = "1" (initial value)

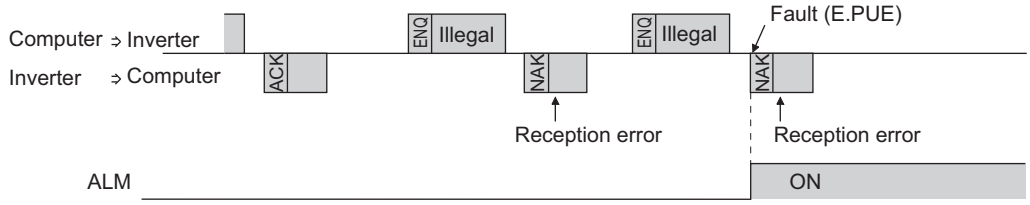

Example: PU connector communication, **Pr. 121** = "9999"

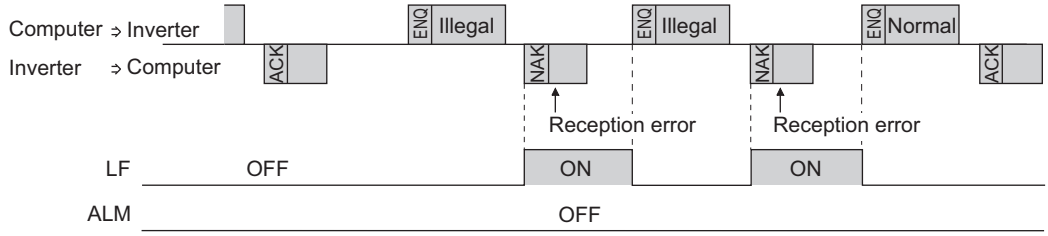

NOTE

- For the RS-485 terminal communication, the operation at a communication error occurrence depends on the **Pr.502 Stop mode selection at communication error** setting. (Refer to page 446)

◆Signal loss detection (Pr.122, Pr.336 RS-485 communication check time interval)

- If a signal loss (communication stop) is detected between the inverter and computer as a result of a signal loss detection, a communication fault (PU connector communication: E.PUE, RS-485 terminal communication: E.SER) occurs and the inverter trips.
- When the setting is "9999", communication check (signal loss detection) is not made.
- When the setting is "0", communication from the PU connector is not possible. In the case of communication by RS-485 terminals, reading, etc. of monitors and parameters is possible, though a communication error (E.SER) occurs instantly when the Network operation mode is switched to.
- A signal loss detection is made when the setting is any of "0.1 s to 999.8 s". To make a signal loss detection, it is necessary to send data (for details on control codes, refer to page 454) from the computer within the communication check time interval. (The inverter makes a communication check (clearing of communication check counter) regardless of the station number setting of the data sent from the master).
- Communication check is started at the first communication in the operation mode having the operation source (PU operation mode for PU connector communication in the initial setting or Network operation mode for RS-485 terminal communication).

Example: PU connector communication, **Pr. 122** = "0.1 to 999.8s"

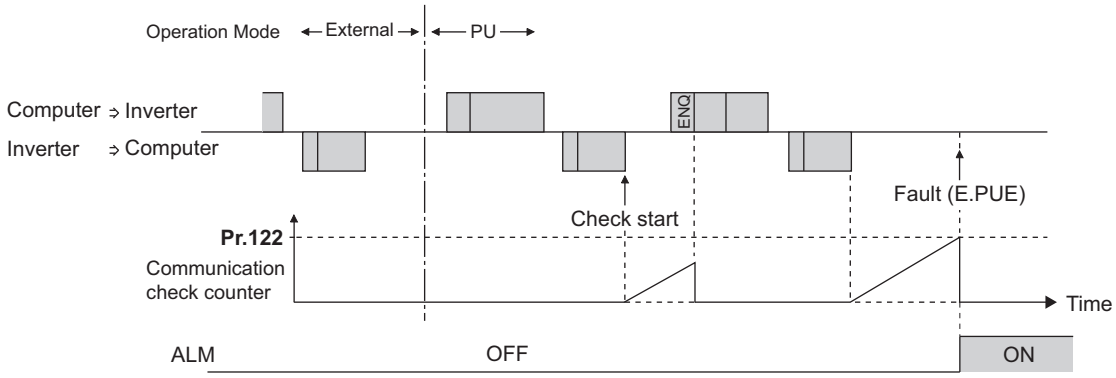

◆Instructions for the program

- When data from the computer has any error, the inverter does not accept that data. Hence, in the user program, always insert a retry program for data error.
- All data communication, for example, run command or monitoring, are started when the computer gives a communication request. The inverter does not return any data without the computer's request. Hence, design the program so that the computer gives a data read request for monitoring, etc. as required.
- Program example: To switch to the Network operation mode

Microsoft® Visual C++® (Ver.6.0) programming example

```
#include <stdio.h>
#include <windows.h>

void main(void){
	HANDLE		hCom;		// Communication handle
	DCB		hDcb;		// Structure for setting communication settings
	COMMTIMEOUTS		hTim;	// Structure for setting timeouts

	char		szTx[0x10];		// Send buffer
	char		szRx[0x10];		// Receive buffer
	char		szCommand[0x10];// Command
	int		nTx,nRx;		// For storing buffer size
	int		nSum;			// For calculating sum code
	BOOL		bRet;
	int		nRet;
	int		i;

	//**** Open COM1 port ****
	hCom = CreateFile("COM1", (GENERIC_READ | GENERIC_WRITE), 0, NULL, OPEN_EXISTING, FILE_ATTRIBUTE_NORMAL, NULL);
	if(hCom != NULL) {
		//****Set COM1 port communication ****
		GetCommState(hCom,&hDcb);				// Get current communication information
		hDcb.DCBlength = sizeof(DCB);				// Structure size setting
		hDcb.BaudRate  = 19200;				// Communication speed = 19200 bps
		hDcb.ByteSize  = 8;					// Data length = 8 bits
		hDcb.Parity    = 2;					// Parity check at even numbers
		hDcb.StopBits  = 2;					// Stop bit = 2 bits
		bRet = SetCommState(hCom,&hDcb);			// Setting of changed communication information
		if(bRet == TRUE) {
			//**** Set COM1 port timeout ****
			GetCommTimeouts(hCom,&hTim);			// Get current timeout values
			hTim.WriteTotalTimeoutConstant = 1000;		// Write timeout 1 second
			hTim.ReadTotalTimeoutConstant = 1000;		// Read timeout 1 second
			hTim.ReadTotalTimeoutConstantSetCommTimeouts(hCom,&hTim);// Setting of changed timeout values
			//**** Setting of command for switching the station number 1 inverter to the Network operation mode ****
			sprintf(szCommand,"01FB10000");			// Send data (NET operation write)
			nTx = strlen(szCommand);			// Send data size
			//**** Generate sum code ****
			nSum = 0;					// Initialize sum data
			for(i = 0;i < nTx;i++) {
				nSum += szCommand[i];			// Calculate sum code
				nSum &= (0xff);				// Mask data
			}

			//**** Generate send data ****
			memset(szTx,0,sizeof(szTx));			// Initialize send buffer
			memset(szRx,0,sizeof(szRx));			// Initialize receive buffer
			sprintf(szTx,"\5%s%02X",szCommand,nSum);// ENQ code + send data + sum code
			nTx = 1 + nTx + 2;				// ENQ code + number of send data + number of sum codes

			nRet = WriteFile(hCom,szTx,nTx,&nTx,NULL);
			//**** Send ****
			if(nRet != 0) {
				nRet = ReadFile(hCom,szRx,sizeof(szRx),&nRx,NULL);
			//**** Receive ****
				if(nRet != 0) {
					//**** Display receive data ****
					for(i = 0;i < nRx;i++) {
						printf("%02X ",(BYTE)szRx[i]);// Output received data to console
						// Display ASCII code in Hexadecimal' In case of 0', "30" is displayed.
					}
					printf("\n\r");
				}
			}
		}
		CloseHandle(hCom);					// Close communication port
	}
}
```

General flowchart

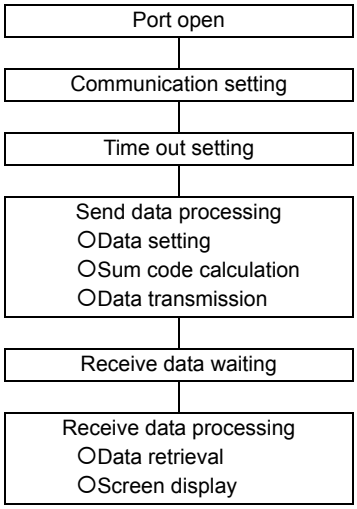

⚠ Caution

- **Always set the communication check time interval before starting operation to prevent hazardous conditions.**
- **Data communication is not started automatically but is made only once when the computer provides a communication request. If communication is disabled during operation due to signal cable breakage etc., the inverter cannot be stopped. When the communication check time interval has elapsed, the inverter will trip (E.PUE, E.SER).**
  The inverter can be coasted to a stop by switching ON the RES signals or by switching the power OFF.
- **If communication is broken due to signal cable breakage, computer fault etc., the inverter does not detect such a fault. This should be fully noted.**

◆Setting items and set data

- After completion of parameter settings, set the instruction codes and data, then start communication from the computer to allow various types of operation control and monitoring.

Item		Read/ Write	Instruction code	Data description	Number of data digits (Format)*1
Operation mode		Read	H7B	H0000: Network operation H0001: External operation H0002: PU operation, External/PU combined operation, PUJOG operation	4 digits (B.E/D)
		Write	HFB	H0000: Network operation H0001: External operation H0002: PU operation (RS-485 communication operation via PU connector)	4 digits (A,C/D)
Monitor	Output frequency /speed	Read	H6F	H0000 to HFFFF: Output frequency in 0.01Hz increments (The display can be changed to the rotations per minute using **Pr.37** and **Pr.144**. (Refer to page 261))	4 digits (B.E/D)
	Output current	Read	H70	H0000 to HFFFF: Output current (hexadecimal) Increment 0.01 A (FR-F820-02330(55K) or lower, FR-F840-01160(55K) or lower) Increment 0.1 A (FR-F820-03160(75K) or higher, FR-F840-01800(75K) or higher)	4 digits (B.E/D)
	Output voltage	Read	H71	H0000 to HFFFF: Output voltage (hexadecimal) in 0.1 V increments	4 digits (B.E/D)
	Special monitor	Read	H72	H0000 to HFFFF: Monitor data selected in the instruction code HF3	4 digits (B.E/D)
	Special monitor selection No.	Read	H73	Monitor selection data (Refer to page 263 for details on selection No.)	2 digits (B.E1/D)
		Write	HF3		2 digits (A1,C/D)
	Fault record	Read	H74 to H77	H0000 to HFFFF: Two latest fault records 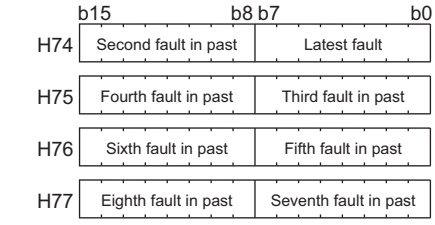 Fault record display example (instruction code H74) With the read data H30A0 (Last fault : THT) (Present fault : OPT) 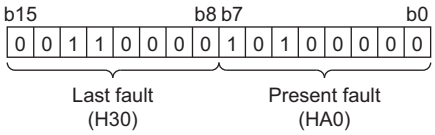 (Refer to page 533 for details on fault record read data.)	4 digits (B.E/D)
Operation command (extended)		Write	HF9	Control input commands such as forward rotation signal (STF) and reverse rotation signal (STR) can be set. (For the details, refer to page 463.)	4 digits (A,C/D)
Operation command		Write	HFA		2 digits (A1,C/D)
Inverter status monitor (extended)		Read	H79	The states of the output signals such as forward rotation, reverse rotation and inverter running (RUN) can be monitored. (For the details, refer to page 463.)	4 digits (B.E/D)
Inverter status monitor		Read	H7A		2 digits (B.E1/D)
Set frequency (RAM)		Read	H6D	Read the set frequency/speed from the RAM or EEPROM. H0000 to HFFFF: Set frequency in 0.01Hz increments (The display can be changed to the rotations per minute using **Pr.37** and **Pr.144**. (Refer to page 261))	4 digits (B.E/D)
Set frequency (EEPROM)			H6E		

Item		Read/ Write	Instruction code	Data description	Number of data digits (Format)*1
Set frequency (RAM)		Write	HED	Write the set frequency/speed into the RAM or EEPROM. H0000 to HE678 (0 to 590.00Hz): frequency in 0.01Hz increments (The display can be changed to the rotations per minute using **Pr.37** and **Pr.144**. (Refer to page 261)) • To change the set frequency consecutively, write data to the inverter RAM. (Instruction code: HED)	4 digits (A,C/D)
Set frequency (RAM, EEPROM)			HEE		
Inverter reset		Write	HFD	H9696: Inverter reset • As the inverter is reset at the start of communication by the computer, the inverter cannot send reply data back to the computer.	4 digits (A,C/D)
				H9966: Inverter reset • When data is sent normally, ACK is returned to the computer, and then the inverter is reset.	4 digits (A,D)
Faults history batch clear		Write	HF4	H9696: Faults history batch clear	4 digits (A,C/D)
Parameter clear All clear		Write	HFC	All parameters return to initial values. Whether to clear communication parameters or not can be selected according to the data. • Parameter clear H9696: Communication parameters are cleared. H5A5A: Communication parameters are not cleared.*2 • All parameter clear H9966: Communication parameters are cleared. H55AA: Communication parameters are not cleared.*2 For the details of whether or not to clear parameters, refer to page 597. When a clear is performed with H9696 or H9966, communication related parameter settings also return to the initial values. When resuming the operation, set the parameters again. Performing a clear will clear the instruction code HEC, HF3, and HFF settings. Only H9966 and H55AA (all parameter clear) are valid during the password lock (refer to page 171).	4 digits (A,C/D)
Parameter		Read	H00 to H63	Refer to the instruction code (page 597) and write and/or read parameter values as required. When setting **Pr.100** and later, the link parameter extended setting must be set.	4 digits (B.E/D)
		Write	H80 to HE3		4 digits (A,C/D)
Link parameter Extended setting		Read	H7F	Parameter settings are switched according to the H00 to H0D settings. For details of the settings, refer to the instruction code (page 597).	2 digits (B.E1/D)
		Write	HFF		2 digits (A1,C/D)
Second parameter changing (instruction code HFF = 1, 9)		Read	H6C	When setting the calibration parameters *3 H00: Frequency *4 H01: Parameter-set analog value H02: Analog value input from terminal	2 digits (B.E1/D)
		Write	HEC		2 digits (A1,C/D)
Multi command		Write/ Read	HF0	Available for writing 2 commands, and monitoring 2 items for reading data (refer to page 464 for detail)	10 digits (A2,C1/D)
Inverter model monitor	Inverter model	Read	H7C	Reading inverter model in ASCII code. "H20" (blank code) is set for blank area Example of "FR-F840-1 (FM type)" H46, H52, H2D, H46, H38, H34, H30, H2D, H31, H20, H20 ..... H20	20 digits (B,E3/D)
	Capacity	Read	H7D	Reading inverter ND rated capacity in ASCII code. Data is read in increments of 0.1kW, and rounds down to 0.01kW increments "H20" (blank code) is set for blank area Example 0.75K....."7" (H20, H20, H20, H20, H20, H37)	6 digits (B,E2/D)

*1 Refer to page 452 for data formats (A, A1, A2, B, C, C1, D, E, E1, E2, E3, F)

*2 Turning OFF the power supply while clearing parameters with H5A5A or H55AA returns the communication parameter settings to the initial settings.

*3 Refer to the calibration parameter list below for details on calibration parameters.

*4 The gain frequency can be also written using **Pr.125** (instruction code: H99) or **Pr.126** (instruction code: H9A).

NOTE

- Set 65520 (HFFF0) as a parameter value "8888" and 65535 (HFFFF) as "9999".
- For the instruction codes HFF, HEC and HF3, their values are held once written but cleared to zero when an inverter reset or all clear is performed.
- When a 32-bit parameter setting or monitored value is read and the read value exceeds HFFFF, the reply data will be HFFFF.

Example) When reading the **C3 (Pr.902) and C6 (Pr.904)** settings from the inverter of station No. 0.

	Computer send data	Inverter send data	Description
a	ENQ 00 FF 0 01 7D	ACK 00	Set "H01" in the extended link parameter
b	ENQ 00 EC 0 01 79	ACK 00	Set "H01" in second parameter changing
c	ENQ 00 5E 0 0A	STX 00 0000 ETX 20	**C3 (Pr.902)** is read. 0% is read.
d	ENQ 00 60 0 F6	STX 00 0000 ETX 20	**C6 (Pr.904)** is read. 0% is read.

To read/write **C3 (Pr.902)** or **C6 (Pr.904)** after inverter reset or parameter clear, execute from (a) again.

◆List of calibration parameters

Pr.	Name	Instruction code		
		Read	Write	Extended
C2 (902)	Terminal 2 frequency setting bias frequency	5E	DE	1
C3 (902)	Terminal 2 frequency setting bias	5E	DE	1
125 (903)	Terminal 2 frequency setting gain frequency	5F	DF	1
C4 (903)	Terminal 2 frequency setting gain	5F	DF	1
C5 (904)	Terminal 4 frequency setting bias frequency	60	E0	1
C6 (904)	Terminal 4 frequency setting bias	60	E0	1
126 (905)	Terminal 4 frequency setting gain frequency	61	E1	1
C7 (905)	Terminal 4 frequency setting gain	61	E1	1
C12 (917)	Terminal 1 bias frequency (speed)	11	91	9
C13 (917)	Terminal 1 bias (speed)	11	91	9
C14 (918)	Terminal 1 gain frequency (speed)	12	92	9
C15 (918)	Terminal 1 gain (speed)	12	92	9
C16 (919)	Terminal 1 bias command (torque)	13	93	9
C17 (919)	Terminal 1 bias (torque)	13	93	9
C18 (920)	Terminal 1 gain command (torque)	14	94	9
C19 (920)	Terminal 1 gain (torque)	14	94	9
C8 (930)	Current output bias signal	1E	9E	9
C9 (930)	Current output bias current	1E	9E	9
C10 (931)	Current output gain signal	1F	9F	9
C11 (931)	Current output gain current	1F	9F	9
C38 (932)	Terminal 4 bias command (torque)	20	A0	9
C39 (932)	Terminal 4 bias (torque)	20	A0	9
C40 (933)	Terminal 4 gain command (torque)	21	A1	9
C41 (933)	Terminal 4 gain (torque)	21	A1	9
C42 (934)	PID display bias coefficient	22	A2	9
C43 (934)	PID display bias analog value	22	A2	9
C44 (935)	PID display gain coefficient	23	A3	9
C45 (935)	PID display gain analog value	23	A3	9

◆Operation command

Item	Instruction code	Bit length	Description*1*3	Example
Operation command	HFA	8 bits	b0: AU (Terminal 4 input selection) b1: Forward rotation command b2: Reverse rotation command b3: RL (Low-speed operation command) b4: RM (Middle-speed operation command) b5: RH (High-speed operation command) b6: RT (Second function selection) b7: MRS (Output stop)	[Example 1] H02 Forward rotation b7 … b0 0 0 0 0 0 0 1 0 [Example 2] H00 Stop b7 … b0 0 0 0 0 0 0 0 0
Operation command (extended)	HF9	16 bits	b0: AU (Terminal 4 input selection) b1: Forward rotation command b2: Reverse rotation command b3: RL (Low-speed operation command) b4: RM (Middle-speed operation command) b5: RH (High-speed operation command) b6: RT (Second function selection) b7: MRS (Output stop) b8: JOG (Jog operation selection) *2 b9: CS (No function) *2 b10: STP (STOP) (Start self-holding selection) *2 b11: RES (Inverter reset) *2 b12 to b15: -	[Example 1] H0002 Forward rotation b15 … b0 0 0 0 0 0 0 0 0 0 0 0 0 0 1 0 [Example 2] H0800 low speed operation (When **Pr. 189 RES terminal function selection** is set to "0") b15 … b0 0 0 0 0 1 0 0 0 0 0 0 0 0 0 0 0

*1 The signal within parentheses ( ) is the initial status. The description changes depending on the setting of **Pr.180 to Pr.184, Pr.187 (Input terminal function selection)** (page 329).

*2 JOG operation/automatic restart after instantaneous power failure/start self-holding selection/reset cannot be controlled over a network, so in the initial status bit8 to bit11 are invalid. To use bit8 to bit11, change the signal by **Pr.185, Pr.186, Pr.188, or Pr.189 (Input terminal function selection)** (page 329) (A reset can be executed by the instruction code HFD.)

*3 In RS-485 communication from the PU connector, only the forward rotation command and reverse rotation command can be used.

◆Inverter status monitor

Item	Instruction code	Bit length	Description*1	Example
Inverter status monitor	H7A	8 bits	b0: RUN (Inverter running) b1: During forward rotation b2: During reverse rotation b3: SU (Up to frequency) b4: OL (Overload warning) b5: IPF (Instantaneous power failure/ undervoltage) b6: FU (Output frequency detection) b7: ABC1 (Fault)	[Example 1] H02 … During forward rotation b7 … b0 0 0 0 0 0 0 1 0 [Example 2] H80 … Stop at fault occurrence b7 … b0 1 0 0 0 0 0 0 0
Inverter status monitor (extended)	H79	16 bits	b0: RUN (Inverter running) b1: During forward rotation b2: During reverse rotation b3: SU (Up to frequency) b4: OL (Overload warning) b5: IPF (iInstantaneous power failure/ undervoltage) b6: FU (Output frequency detection) b7: ABC1 (Fault) b8: ABC2 (—) b9: Safety monitor output b10 to b14: - b15: Fault occurrence	[Example 1] H0002 …During forward rotation b15 … b0 0 0 0 0 0 0 0 0 0 0 0 0 0 0 1 0 [Example 2] H8080 …Stop at fault occurrence b15 … b0 1 0 0 0 0 0 0 0 1 0 0 0 0 0 0 0

*1 The signal within parentheses ( ) is the initial status. The description changes depending on the setting of **Pr.190 to Pr.196 (output terminal function selection)**.

◆Multi command (HF0)

• Sending data format from computer to inverter

Format	Number of characters																		
	1	2	3	4	5	6	7	8	9	10	11	12	13	14	15	16	17	18	19
A2	ENQ	Inverter station No.		Instruction Code (HF0)		Waiting time	Send data type *1	Receive data type*2	Data1 *3				Data2 *3				Sum check		CR/ LF

• Reply data format from inverter to computer (No data error detected)

Format	Number of characters																		
	1	2	3	4	5	6	7	8	9	10	11	12	13	14	15	16	17	18	19
C1	STX	Inverter station No.		Send data type *1	Receive data type*2	Error code 1 *5	Error code 2 *5	Data1 *4				Data2 *4				ETX	Sum check		CR/ LF

*1 Specify the data type of sending data (from computer to inverter).
*2 Specify the data type of reply data (from inverter to computer).
*3 Combination of data 1 and data 2 for sending

Data type	Data 1	Data 2	Remarks
0	Operation command (extended)	Set frequency (RAM)	Run command (extended) is same as instruction code HF9 (Refer to **page 463**)
1	Operation command (extended)	Set frequency (RAM, EEPROM)	

*4 Combination of data 1 and data 2 for reply

Data type	Data 1	Data 2	Remarks
0	Inverter status monitor (extended)	Output frequency (speed)	Inverter status monitor (extended) is same as instruction code H79 (Refer to **page 463**) Replys the monitor item specified in instruction code HF3 for special monitor.(Refer to **page 263**)
1	Inverter status monitor (extended)	Special monitor	

*5 Error code for sending data 1 is set in error code 1, and error code for sending data 2 is set in error code 2.
Mode error (HA), instruction code error (HB), data range error (HC) or no error (HF) is replied. (Refer to **page 533** for the details of the error codes.)

5.12.6 Modbus-RTU communication specification

Operation by Modbus-RTU communication or parameter setting is possible by using the Modbus-RTU communication protocol from the RS-485 terminals of the inverter.

Pr.	Name	Initial value	Setting range	Description
331 N030	**RS-485 communication station number**	0	0	Broadcast communication
			1 to 247	Inverter station number specification Set the inverter station numbers when two or more inverters are connected to one personal computer.
332 N031	**RS-485 communication speed**	96	3, 6, 12, 24, 48, 96, 192, 384, 576, 768, 1152	Set the communication speed. The setting value × 100 equals the communication speed. For example, if 96 is set, the communication speed is 9600 bps.
334 N034	**RS-485 communication parity check selection**	2	0	Without parity check Stop bit length 2 bits
			1	With parity check at odd numbers Stop bit length 1 bit
			2	With parity check at even numbers Stop bit length 1 bit
343 N080	**Communication error count**	0	—	Displays the communication error count during Modbus-RTU communication. Read-only.
539 N002	**Modbus-RTU communication check time interval**	9999	0	Modbus-RTU communication, but the inverter trips in the NET operation mode.
			0.1 to 999.8 s	Set the interval of the communication check (signal loss detection) time. (same specifications as **Pr.122**)
			9999	No communication check (signal loss detection)
549 N000	**Protocol selection**	0	0	Mitsubishi inverter protocol (computer link)
			1	Modbus-RTU protocol
			2	BACnet MS/TP protocol

NOTE

- To use the Modbus-RTU protocol, set "1" to **Pr.549 Protocol selection**.
- If Modbus-RTU communication is performed from the master to the address 0 (station number 0), the data is broadcasted, and the inverter does not send any reply to the master. To obtain replies from the inverter, set **Pr.331 RS-485 communication station number** ≠ "0 (initial value)". Some functions are disabled in broadcast communication. (Refer to page 467.)
- If a communication option is mounted with **Pr.550 NET mode operation command source selection** = "9999 (initial value)", commands (operation commands) transmitted via RS-485 terminals become invalid. (Refer to page 210.)

◆Communication specifications

- The communication specifications are given below.

Item		Description	Related parameter
Communication protocol		Modbus-RTU protocol	**Pr.549**
Conforming standard		EIA-485 (RS-485)	—
Connectable units		1:N (maximum 32 units), setting is 0 to 247 stations	**Pr.331**
Communication Speed		Selected among 300/600/1200/2400/4800/9600/19200/38400/57600/76800/115200 bps	**Pr.332**
Control procedure		Asynchronous system	—
Communication method		Half-duplex system	—
Communication specifications	Character system	Binary (fixed at 8 bits)	—
	Start bit	1 bit	—
	Stop bit length	Select from the following three types: No parity check, stop bit length 2 bits Odd parity check , stop bit length 1 bit Even parity check, stop bit length 1 bit	**Pr.334**
	Parity check		
	Error check	CRC code check	—
	Terminator	Not used	—
Waiting time setting		Not used	—

◆Outline

- The Modbus communication protocol was developed by Modicon for programmable controllers.
- The Modbus protocol uses exclusive message frames to perform serial communication between a master and slaves. These exclusive message frames are provided with a feature called "functions" that allows data to be read or written. These functions can be used to read or write parameters from the inverter, write input commands to the inverter or check the inverter's operating status, for example. This product classifies the data of each inverter into holding register area (register address 40001 to 49999). The master can communicate with inverters (for instance,. slaves) by accessing pre-assigned holding register addresses.

NOTE

- There are two serial transmission modes, the ASCII (American Standard Code for Information Interchange) mode and the RTU (Remote Terminal Unit) mode. However, this product supports only the RTU mode, which transfers 1 byte data (8 bits) as it is. Also, only communication protocol is defined by the Modbus protocol. Physical layers are not stipulated.

◆Message format

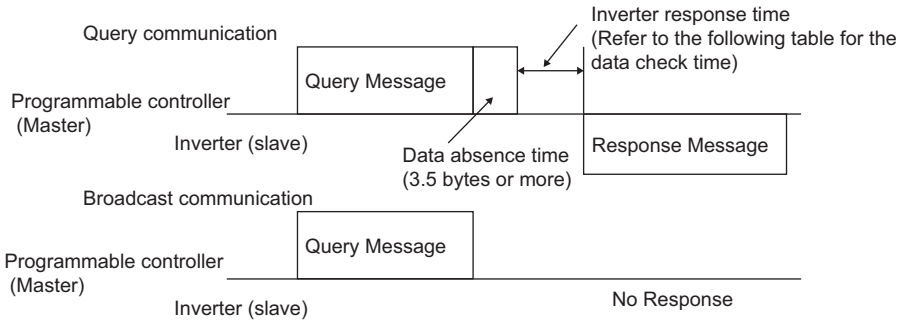

- Data check time

Item	Check time
Various monitors, operation command, Frequency setting (RAM)	<12 ms
Parameter read/write, frequency setting (EEPROM)	<30 ms
Parameter clear / all clear	<5 s
Reset command	No answer

- Query

  A message is sent to the slave (for instance, the inverter) having the address specified by the master.

- Normal Response

  After the query from the master is received, the slave executes the request function, and returns the corresponding normal response to the master.

- Error Response

  When an invalid function code, address or data is received by the slave, the error response is returned to the master. This response is appended with an error code that indicates the reason why the request from the master could not be executed.

  This response cannot be returned for errors, detected by the hardware, frame error and CRC check error.

- Broadcast

  The master can broadcast messages to all slaves by specifying address 0. All slaves that receive a message from the master execute the requested function. With this type of communication, slaves do not return a response to the master.

NOTE

- During broadcast communication, functions are executed regarded of the set inverter station number **(Pr.331)**.

◆Message frame (protocol)

- Communication method

  Basically, the master sends a Query message (question), and slaves return the Response message (response). At normal communication, the Device Address and Function Code are copied as they are, and at erroneous communication (illegal function code or data code), bit7 (= 80 h) of the Function Code is turned ON, and the error code is set at Data Bytes.

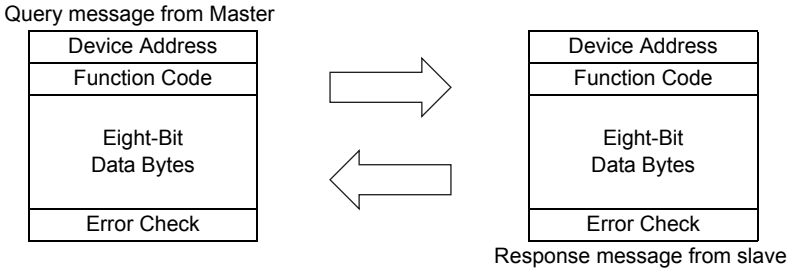

  Message frames comprise of the four message fields shown in the figures above.

  A slave recognizes message data as a message by the message data being prefixed and appended with a no data time of 3.5 characters (T1: start/end).

- Details of protocol

  The following table explains the four message fields.

Start	ADDRESS	FUNCTION	DATA	CRC CHECK		End
T1	8 bits	8 bits	n × 8 bits	L 8 bits	H 8 bits	T1

Message field	Description
ADDRESS field	0 to 247 can be set in single byte lengths (8 bits). Set "0" when sending broadcast messages (instructions to all addresses), and "1 to 247" to send messages to individual slaves. The address set by the master is also returned when the response from the slave is. The value set to **Pr.331 RS-485 communication station number** is the slave address.
FUNCTION field	1 to 255 can be set in single byte lengths (8 bits) for the function code. The master sets the function to be sent to the slave as the request, and the slave performs the requested operation. "Function code list" summarizes the supported function codes. An error response is generated when a function code other than "Function code list" is set. At a response from the slave, the function code set by the master is returned in the case of a normal response. At an error response, H80 + the function code is returned.
DATA field	The format changes according to the function code. (Refer to page 468.) The data, for example, includes the byte count, number of bytes and accessing content of holding registers.
CRC CHECK field	Errors in the received message frame are detected. Errors are detected in the CRC check, and the message is appended with data 2 bytes long. When the message is appended with the CRC, the lower bytes are appended first, followed by the upper bytes. The CRC value is calculated by the sender that appends the message with the CRC. The receiver recalculates the CRC while the message is being received, and compares the calculation result against the actual value that was received in the error check field. If the two values do not match, the result is treated as an error.

◆Function code list

Function name	Read/ Write	Code	Outline	Broadcast communication	Message format reference page
Read Holding Register	Read	H03	The data of the holding registers is read. The various data of the inverter can be read from Modbus registers. System environmental variable (Refer to **page 475**.) Real time monitor (Refer to **page 264**.) Faults history (Refer to **page 477**.) Model information monitor (Refer to **page 477**.) Inverter parameters (Refer to **page 476**.)	Not available	**page 469**.
Preset Single Register	Write	H06	Data is written to holding registers. Data can be written to Modbus registers to output instructions to the inverter or set parameters. System environmental variable (Refer to **page 475**.) Inverter parameters (Refer to **page 476**.)	Available	**page 470**.
Diagnostics	Read	H08	Functions are diagnosed. (communication check only) A communication check can be made since the query message is sent and the query message is returned as it is as the return message (subfunction code H00 function). Subfunction code H00 (Return Query Data)	Not available	**page 471**.
Preset Multiple Registers	Read	H10	Data is written to consecutive multiple holding registers. Data can be written to consecutive multiple Modbus registers to output instructions to the inverter or set parameters. System environmental variable (Refer to **page 475**.) Inverter parameters (Refer to **page 476**.)	Available	**page 472**.
Read holding register access log	Read	H46	The number of registers that were successfully accessed by the previous communication is read. Queries by function codes H03 and H10 are supported. The number and start address of holding registers successfully accessed by the previous communication are returned. "0" is returned for both the number and start address for queries other than function code H03 and H10.	Not available	**page 473**.

◆Read Holding Register (reading of data of holding registers) (H03 or 03)

• Query message

a. Slave Address	b. Function	c. Starting Address		d. No. of Points		CRC Check	
(8 bits)	H03 (8 bits)	H (8 bits)	L (8 bits)	H (8 bits)	L (8 bits)	L (8 bits)	H (8 bits)

• Normal response (Response message)

a. Slave Address	b. Function	e. Byte Count	f. Data			CRC Check	
(8 bits)	H03 (8 bits)	(8 bits)	H (8 bits)	L (8 bits)	... (n × 16 bits)	L (8 bits)	H (8 bits)

• Query message setting

Message		Description
a	Slave Address	Set the address to send messages to. Broadcast communication is not possible. (Invalid when "0" is set.)
b	Function	Set H03.
c	Starting Address	Set the address from which to start reading of data from the holding register. Start address = start register address (decimal) - 40001 For example, when start register address 0001 is set, the data of holding register address 40002 is read.
d	No. of Points	Set the number of holding registers to read. Data can be read from up to 125 registers.

• Content of normal response

Message		Description
e	Byte Count	The setting range is H02 to HFA (2 to 250). Twice the number of reads specified by (d) is set.
f	Data	The amount of data specified by (d) is set. Read data is output Hi bytes first followed by Lo bytes, and is arranged as follows: data of start address, data of start address+1, data of start address+2, and so forth.

Example) Read the register values of 41004 **(Pr.4)** to 41006 **(Pr.6)** from slave address 17 (H11).

Query message

Slave Address	Function	Starting Address		No. of Points		CRC Check	
H11 (8 bits)	H03 (8 bits)	H03 (8 bits)	HEB (8 bits)	H00 (8 bits)	H03 (8 bits)	H77 (8 bits)	H2B (8 bits)

Response message

Slave Address	Function	Byte Count	Data						CRC Check	
H11 (8 bits)	H03 (8 bits)	H06 (8 bits)	H17 (8 bits)	H70 (8 bits)	H0B (8 bits)	HB8 (8 bits)	H03 (8 bits)	HE8 (8 bits)	H2C (8 bits)	HE6 (8 bits)

Read value

Register 41004 **(Pr.4)**: H1770 (60.00 Hz)

Register 41005 **(Pr.5)**: H0BB8 (30.00 Hz)

Register 41006 **(Pr.6)**: H03E8 (10.00 Hz)

◆Preset Single Register (writing of data to holding registers) (H06 or 06)

- The content of the "system environmental variables" and "inverter parameters" assigned to the holding register area (refer to the register list (page 475)) can be written.
- Query message

a. Slave Address	b. Function	c. Register Address		d. Preset Data		CRC Check	
(8 bits)	H06 (8 bits)	H (8 bits)	L (8 bits)	H (8 bits)	L (8 bits)	L (8 bits)	H (8 bits)

- Normal response (Response message)

a. Slave Address	b. Function	c. Register Address		d. Preset Data		CRC Check	
(8 bits)	H06 (8 bits)	H (8 bits)	L (8 bits)	H (8 bits)	L (8 bits)	L (8 bits)	H (8 bits)

- Query message setting

Message		Description
a	Slave Address	Set the address to send messages to. Setting "0" enables broadcast communication.
b	Function	Set H06.
c	Register Address	Set the address from data is written to the holding register. Register address = holding register address (decimal) - 40001 For example, when register address 0001 is set, data is written to holding register address 40002.
d	Preset Data	Set the data to write to the holding register. Write data is fixed at 2 bytes.

- Content of normal response

  With a normal response, the content is the same as **a to d** (including the CRC check) query messages.

  In the case of broadcast communication, no response is returned.

Example) Write 60Hz (H1770) to 40014 (running frequency) of slave address 5 (H05).

Query message

Slave Address	Function	Register Address		Preset Data		CRC Check	
H05 (8 bits)	H06 (8 bits)	H00 (8 bits)	H0D (8 bits)	H17 (8 bits)	H70 (8 bits)	H17 (8 bits)	H99 (8 bits)

Normal response (Response message)

Same data as query message

NOTE

- With broadcast communication, no response is generated even if a query is executed, so when the next query is made, it must be made after waiting for the inverter data processing time after the previous query is executed.

◆Diagnostics (diagnosis of functions) (H08 or 08)

- A communication check can be made since the query message is sent and the query message is returned as it is as the return message (subfunction code H00 function).
  Subfunction code H00 (Return Query Data)
- Query message

a. Slave Address	b. Function	c. Subfunction		d. Data		CRC Check	
(8 bits)	H08 (8 bits)	H00 (8 bits)	H00 (8 bits)	H (8 bits)	L (8 bits)	L (8 bits)	H (8 bits)

- Normal response (Response message)

a. Slave Address	b. Function	c. Subfunction		d. Data		CRC Check	
(8 bits)	H08 (8 bits)	H00 (8 bits)	H00 (8 bits)	H (8 bits)	L (8 bits)	L (8 bits)	H (8 bits)

- Query message setting

Message		Description
a	Slave Address	Set the address to send messages to. Broadcast communication is not possible. (Invalid when "0" is set.)
b	Function	Set H08.
c	Subfunction	Set H0000.
d	Data	Any data 2 bytes long can be set. Setting range is H0000 to HFFFF.

- Content of normal response
  With a normal response, the content is the same as **a to d** (including the CRC check) query messages.

NOTE

- With broadcast communication, no response is generated even if a query is executed, so when the next query is made, it must be made after waiting for the inverter data processing time after the previous query is executed.

◆Preset Multiple Registers (writing of data to multiple holding registers) (H10 or 16)

- Data can be written to multiple holding registers.
- Query message

a. Slave Address	b. Function	c. Starting Address		d. No. of Registers		e. ByteCount	f. Data			CRC Check	
(8 bits)	H10 (8 bits)	H (8 bits)	L (8 bits)	H (8 bits)	L (8 bits)	(8 bits)	H (8 bits)	L (8 bits)	... (n × 2 × 8 bits)	L (8 bits)	H (8 bits)

- Normal response (Response message)

a. Slave Address	b. Function	c. Starting Address		d. No. of Registers		CRC Check	
(8 bits)	H10 (8 bits)	H (8 bits)	L (8 bits)	H (8 bits)	L (8 bits)	L (8 bits)	H (8 bits)

- Query message setting

Message		Description
a	Slave Address	Set the address to send messages to. Setting "0" enables broadcast communication.
b	Function	Set H10.
c	Starting Address	Set the address from which to start writing of data to the holding register. Start address = start register address (decimal) - 40001 For example, when start register address 0001 is set, the data of holding register address 40002 is read.
d	No. of Points	Set the number of holding registers to write to. Data can be written to up to 125 registers.
e	Byte Count	The setting range is H02 to HFA (2 to 250). Set twice the value specified by **d**.
f	Data	Set the amount of data specified by **d**. Set write data Hi bytes first followed by Lo bytes, and arrange it as follows: data of start address, data of start address+1, data of start address+2, and so forth.

- Content of normal response

  With a normal response, the content is the same as **a to d** (including the CRC check) query messages.

Example) Write 0.5 s(H05) to 41007 **(Pr.7)** and 1 s (H0A) to 41008 **(Pr.8)** of slave address 25 (H19).

Query message

Slave Address	Function	Starting Address		No. of Points		Byte Count	Data				CRC Check	
H19 (8 bits)	H10 (8 bits)	H03 (8 bits)	HEE (8 bits)	H00 (8 bits)	H02 (8 bits)	H04 (8 bits)	H00 (8 bits)	H05 (8 bits)	H00 (8 bits)	H0A (8 bits)	H86 (8 bits)	H3D (8 bits)

Normal response (Response message)

Slave Address	Function	Starting Address		No. of Points		CRC Check	
H19 (8 bits)	H10 (8 bits)	H03 (8 bits)	HEE (8 bits)	H00 (8 bits)	H02 (8 bits)	H22 (8 bits)	H61 (8 bits)

◆Read Holding Register access Log (H46 or 70)

- Queries by function codes H03 and H10 are supported.
  The number and start address of holding registers successfully accessed by the previous communication are returned.
  "0" is returned for both the number and start address for queries other than the function codes.
- Query message

a. Slave Address	b. Function	CRC Check	
(8 bits)	H46 (8 bits)	L (8 bits)	H (8 bits)

- Normal response (Response message)

a. Slave Address	b. Function	c. Starting Address		d. No. of Points		CRC Check	
(8 bits)	H46 (8 bits)	H (8 bits)	L (8 bits)	H (8 bits)	L (8 bits)	L (8 bits)	H (8 bits)

- Query message setting

Message		Description
a	Slave Address	Set the address to send messages to. Broadcast communication is not possible. (Invalid when "0" is set.)
b	Function	Set H46.

- Content of normal response

Message		Description
c	Starting Address	The start address of the holding register that was successfully accessed is returned. Start address = start register address (decimal) - 40001 For example, when start address 0001 is returned, the holding register address that was successfully accessed is 40002.
d	No. of Points	The number of holding registers that were successfully accessed is returned.

Example) Read the successful register start address and number of successful accesses from slave address 25 (H19).

Query message

Slave Address	Function	CRC Check	
H19 (8 bits)	H46 (8 bits)	H8B (8 bits)	HD2 (8 bits)

Normal response (Response message)

Slave Address	Function	Starting Address		No. of Points		CRC Check	
H19 (8 bits)	H10 (8 bits)	H03 (8 bits)	HEE (8 bits)	H00 (8 bits)	H02 (8 bits)	H22 (8 bits)	H61 (8 bits)

Two successful reads of start address 41007 **(Pr.7)** are returned.

◆Error response

• An error response is returned if the query message received from the master contains an illegal function, address or data. No response is returned for parity, CRC, overrun, framing, and Busy errors.

NOTE

• No response is also returned in the case of broadcast communication.

• Error response (Response message)

a. Slave Address	b. Function	c. Exception Code	CRC Check	
(8 bits)	H80 + Function (8 bits)	(8 bits)	L (8 bits)	H (8 bits)

	Message	Description
a	Slave Address	Set the address received from the master.
b	Function	The function code requested by the master + H80 is set.
c	Exception Code	The codes in the following table are set.

• Error code list

Code	Error Item	Error description
01	ILLEGAL FUNCTION	The query message from the master is set with a function code that cannot be handled by the slave.
02	ILLEGAL DATA ADDRESS *1	The query message from the master is set with a register address that cannot be handled by the inverter. (No parameter, parameter cannot be read, parameter cannot be written)
03	ILLEGAL DATA VALUE	The query message from the master is set with data that cannot be handled by the inverter. (Out of parameter write range, a mode is specified, other error)

*1 An error does not occur in the following cases:
- Function code H03 (read data of holding register)
  When there are 1 or more number of reads (No. of Points) and there is 1 or more holding register from where data can be read
- Function code H10 (write data to multiple holding registers)
  When there are 1 or more number of writes (No. of Points) and there is 1 or more holding registers to which data can be written.
  In other words, when function code H03 or H10 is used and multiple holding registers are accessed, an error will not occur even if a non-existent holding register or holding register that cannot be read or written is accessed.

NOTE

• An error will occur if all accesses holding registers do not exist. The data read value of non-existent holding registers is 0, and data is invalid when written to non-existent holding registers.

• Error detection of message data

The following errors are detected in message data from the master. The inverter is not tripped even if an error is detected.

Error check items

Error item	Error description	Inverter operation
Parity error	The data received by the inverter is different from the specified parity (**Pr.334** setting).	When this error occurs, **Pr.343** is incremented by one. When this error occurs, the LF signal is output.
Framing error	The data received by the inverter is different from the stop bit length (**Pr.334**) setting.	
Overrun error	The next data has been sent by the master before the inverter completes receiving the preceding data.	
Message frame error	The data length of the message frame is checked, and an error is generated if the received data length is less than 4 bytes.	
CRC check error	An error is generated if the data in the message frame does not match the calculation result.	

NOTE

• The LF signal can be assigned to an output terminal by setting **Pr.190 to Pr.196 (output terminal function selection)**. Changing the terminal assignment may affect other functions. Set parameters after confirming the function of each terminal.

◆Modbus register

• System environmental variables

Register	Definition	Read/Write	Remarks
40002	Inverter reset	Write	Any value can be written
40003	Parameter clear	Write	Set H965A for the write value.
40004	All parameter clear	Write	Set H99AA for the write value.
40006	Parameter clear *1	Write	Set H5A96 for the write value.
40007	All parameter clear *1	Write	Set HAA99 for the write value.
40009	Inverter status/control input command *2	Read/Write	Refer to the following.
40010	Operation mode/inverter setting *3	Read/Write	Refer to the following.
40014	Running frequency (RAM value)	Read/Write	The display can be changed to the rotations per minute using **Pr.37** and **Pr.144**. (Refer to page 261)
40015	Running frequency (EEPROM value)	Write	

*1 Communication parameter settings are not cleared.

*2 At a write, the data is set as the control input command.
At a read, the data is read as the inverter running status.

*3 At a write, the data is set as the operation mode setting.
At a read, the data is read as the operation mode setting.

<Inverter status/control input command>

Bit	Definition	
	Control input command	Inverter status
0	Stop command	RUN (Inverter running) *5
1	Forward rotation command	During forward rotation
2	Reverse rotation command	During reverse rotation
3	RH (High-speed operation command) *4	SU (Up to frequency) *5
4	RM (Middle-speed operation command) *4	OL (Overload warning) *5
5	RL (Low-speed operation command) *4	IPF (Instantaneous power failure/ undervoltage) *5
6	JOG (Jog operation selection) *4	FU (Output frequency detection) *5
7	RT (Second function selection) *4	ABC1 (Fault) *5
8	AU (Terminal 4 input selection) *4	ABC2 (—) *5
9	CS (No function) *4	Safety monitor output
10	MRS (Output stop) *4	0
11	STP (STOP) (Start self-holding selection) *4	0
12	RES (Inverter reset) *4	0
13	0	0
14	0	0
15	0	Fault occurrence

*4 The signal within parentheses ( ) is the initial status. The description changes depending on the setting of **Pr.180 to Pr.189 (input terminal function selection)** (page 329).
For each of the assigned signals, some signals are enabled by NET and some are disabled. (Refer to page 215.)

*5 The signal within parentheses ( ) is the initial status. The description changes depending on the setting of **Pr.190 to Pr.196 (output terminal function selection)** (page 288).

<Operation mode/inverter setting>

Mode	Read value	Write value
EXT	H0000	H0010*6
PU	H0001	H0011*6
EXT JOG	H0002	—
PU JOG	H0003	—
NET	H0004	H0014
PU+EXT	H0005	—

*6 Enable/disable parameter writing by **Pr.79 and Pr.340** settings. For the details, refer to page 209.
Restrictions in each operation mode conform with the computer link specification.

(N) Operation via communication and its settings

- Real-time monitor
  Refer to page 263 for the register numbers and monitored items of the real time monitor.
- Parameters

Pr.	Register	Name	Read/ Write	Remarks
0 to 999	41000 to 41999	For details on parameter names, refer to the parameter list (page 112).	Read/ Write	The parameter number + 41000 is the register number.
C2 (902)	41902	Terminal 2 frequency setting bias (frequency)	Read/ Write	
C3 (902)	42092	Terminal 2 frequency setting bias (analog value)	Read/ Write	Analog value (%) set to **C3 (902)**
	43902	Terminal 2 frequency setting bias (terminal analog value)	Read	Analog value (%) of voltage (current) applied to terminal 2
125 (903)	41903	Terminal 2 frequency setting gain (frequency)	Read/ Write	
C4 (903)	42093	Terminal 2 frequency setting gain (analog value)	Read/ Write	Analog value (%) set to **C4 (903)**
	43903	Terminal 2 frequency setting gain (terminal analog value)	Read	Analog value (%) of voltage (current) applied to terminal 2
C5 (904)	41904	Terminal 4 frequency setting bias (frequency)	Read/ Write	
C6 (904)	42094	Terminal 4 frequency setting bias (analog value)	Read/ Write	Analog value (%) set to **C6 (904)**
	43904	Terminal 4 frequency setting bias (terminal analog value)	Read	Analog value (%) of current (voltage) applied to terminal 4
126 (905)	41905	Terminal 4 frequency setting gain (frequency)	Read/ Write	
C7 (905)	42095	Terminal 4 frequency setting gain (analog value)	Read/ Write	Analog value (%) set to **C7 (905)**
	43905	Terminal 4 frequency setting gain (terminal analog value)	Read	Analog value (%) of current (voltage) applied to terminal 4
C12 (917)	41917	Terminal 1 bias frequency (speed)	Read/ Write	
C13 (917)	42107	Terminal 1 bias (speed)	Read/ Write	Analog value (%) set to **C13 (917)**
	43917	Terminal 1 bias (speed) (terminal analog value)	Read	Analog value (%) of voltage applied to terminal 1
C14 (918)	41918	Terminal 1 gain frequency (speed)	Read/ Write	
C15 (918)	42108	Terminal 1 gain (speed)	Read/ Write	Analog value (%) set to **C15 (918)**
	43918	Terminal 1 gain (speed) (terminal analog value)	Read	Analog value (%) of voltage applied to terminal 1
C16 (919)	41919	Terminal 1 bias command (torque)	Read/ Write	
C17 (919)	42109	Terminal 1 bias (torque)	Read/ Write	Analog value (%) set to **C17 (919)**
	43919	Terminal 1 bias (torque) (terminal analog value)	Read	Analog value (%) of voltage applied to terminal 1
C18 (920)	41920	Terminal 1 gain command (torque)	Read/ Write	
C19 (920)	42110	Terminal 1 gain (torque)	Read/ Write	Analog value (%) set to **C19 (920)**
	43920	Terminal 1 gain (torque) (terminal analog value)	Read	Analog value (%) of voltage applied to terminal 1
C9 (930)	42120	Current output bias current	Read/ Write	Analog value (%) set to **C9 (930)**
C11 (931)	42121	Current output gain current	Read/ Write	Analog value (%) set to **C11 (931)**
C38 (932)	41932	Terminal 4 bias command (torque)	Read/ Write	
C39 (932)	42122	Terminal 4 bias (torque)	Read/ Write	Analog value (%) set to **C39 (932)**
	43932	Terminal 4 bias (torque) (terminal analog value)	Read	Analog value (%) of current (voltage) applied to terminal 4

Pr.	Register	Name	Read/ Write	Remarks
C40 (933)	41933	Terminal 4 gain command (torque)	Read/ Write	
C41 (933)	42123	Terminal 4 gain (torque)	Read/ Write	Analog value (%) set to **C41 (933)**
	43933	Terminal 4 gain (torque) (terminal analog value)	Read	Analog value (%) of current (voltage) applied to terminal 4
C42 (934)	41934	PID display bias coefficient	Read/ Write	
C43 (934)	42124	PID display bias analog value	Read/ Write	Analog value (%) set to **C43 (934)**
	43934	PID display bias analog value (terminal analog value)	Read	Analog value (%) of current (voltage) applied to terminal 4
C44 (935)	41935	PID display gain coefficient	Read/ Write	
C45 (935)	42125	PID display gain analog value	Read/ Write	Analog value (%) set to **C45 (935)**
	43935	PID display gain analog value (terminal analog value)	Read	Analog value (%) of current (voltage) applied to terminal 4
1000 to 1999	45000 to 45999	For details on parameter names, refer to the parameter list (page 112).	Read/ Write	The parameter number + 44000 is the register number.

• Faults history

Register	Definition	Read/Write	Remarks
40501	Faults history 1	Read/Write	Data is 2 bytes and so is stored in "H00○○". The lowest 1 byte can be referred to for the error code. (For details on error codes, refer to page 533.) The faults history is batch-cleared by writing to register 40501. Set any value for the data.
40502	Faults history 2	Read	
40503	Faults history 3	Read	
40504	Faults history 4	Read	
40505	Faults history 5	Read	
40506	Faults history 6	Read	
40507	Faults history 7	Read	
40508	Faults history 8	Read	

• Model information monitor

Register	Definition	Read/Write	Remarks
44001	Model (First and second characters)	Read	Reading inverter type in ASCII code. "H20" (blank code) is set for blank area. Example of FR-F840-1 (FM type) H46, H52, H2D, H46, H38, H34, H30, H2D, H31, H20.....H20
44002	Model (Third and fourth characters)	Read	
44003	Model (Fifth and sixth characters)	Read	
44004	Model (Seventh and eighth characters)	Read	
44005	Model (Ninth and tenth characters)	Read	
44006	Model (Eleventh and twelfth characters)	Read	
44007	Model (Thirteenth and fourteenth characters)	Read	
44008	Model (Fifteenth and sixteenth characters)	Read	
44009	Model (Seventeenth and eighteenth characters)	Read	
44010	Model (Nineteenth and twentieth characters)	Read	
44011	Capacity (First and second characters)	Read	Reading inverter capacity in ASCII code. Data is read in increments of 0.1 kW, and rounds down to 0.01 kW increments. "H20" (blank code) is set for blank area. Example 0.75K ....."7" (H20, H20, H20, H20, H20, H37)
44012	Capacity (Third and fourth characters)	Read	
44013	Capacity (Fifth and sixth characters)	Read	

NOTE

• When a 32-bit parameter setting or monitored value is read and the read value exceeds HFFFF, the reply data will be HFFFF.

◆Pr.343 Communication error count

• The communication error occurrence count can be checked.

Parameter	Setting range	Minimum setting range	Initial value
343	(Read only)	1	0

NOTE

• The communication error count is temporarily stored in the RAM memory. The value is not stored in EEPROM, and so is cleared to 0 when power is reset and the inverter is reset.

◆Output signal LF "alarm output (communication error warning)"

• During a communication error, the alarm signal (LF signal) is output by open collector output. Assign the terminal to be used using any of **Pr.190 to Pr.196 (output terminal function selection)**.

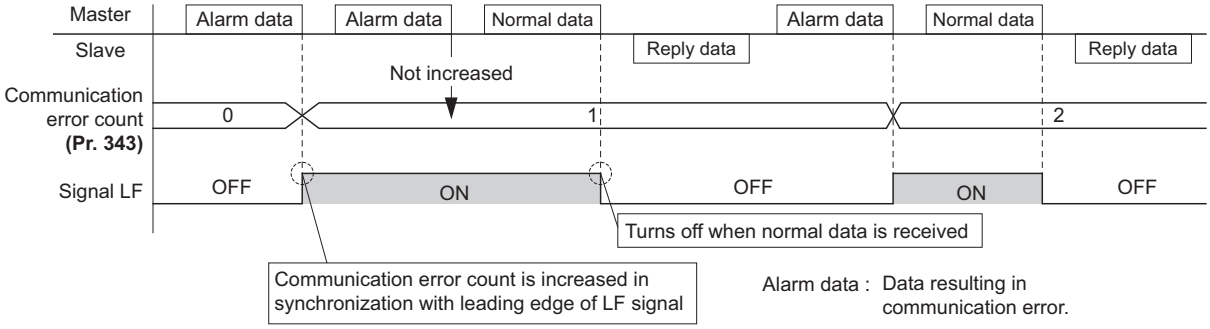

NOTE

• The LF signal can be assigned to an output terminal by setting **Pr.190 to Pr.196**. Changing the terminal assignment may affect other functions. Set parameters after confirming the function of each terminal.

◆Signal loss detection (Pr.539 Modbus-RTU communication check time interval)

- If a signal loss (communication) is detected between the inverter and the master as a result of a signal loss detection, an inverter communication fault (E.SER) occurs and the inverter trips.
- When the setting is "9999", communication check (signal loss detection) is not made.
- When the setting is "0", reading, etc. of monitors and parameters is possible, though a Communication fault (inverter) (E.SER) occurs instantly when the Network operation mode is switched to.
- A signal loss detection is made when the setting is any of "0.1 s to 999.8 s". To make a signal loss detection, it is necessary to send data from the master within the communication check time interval. (The inverter makes a communication check (clearing of communication check counter) regardless of the station number setting of the data sent from the master).
- The communication check is made from the first communication in the Network operation mode (can be changed by **Pr.551 PU mode operation command source selection**).
- The communication check time by query communication includes a no data time (3.5 bytes).
  This no data time differs according to the communication speed, so take this time no data time into consideration when setting the communication check time.

Example: RS-485 terminal communication, **Pr. 539** = "0.1 to 999.8 s"

Query communication

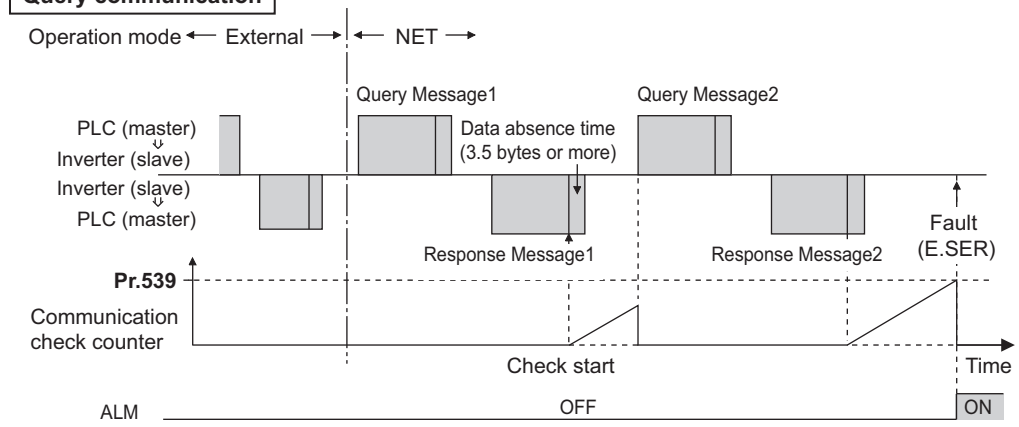

Broadcast communication

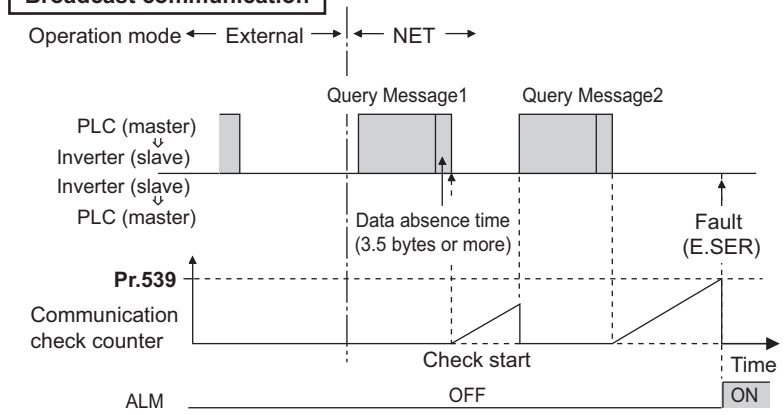

NOTE

- For the RS-485 terminal communication, the operation at a communication error occurrence depends on the **Pr.502** Stop mode selection at communication error setting. (Refer to page 446)

5.12.7 BACnet MS/TP protocol

Using BACnet MS/TP protocol, communication operation and parameter setting are available from the RS-485 terminals of the inverter.

Pr.	Name	Initial value		Setting range	Description
		FM	CA		
52 M100	**Operation panel main monitor selection**	0		0, 5 to 14, 17, 18, 20, 23 to 25, 34, 38, 40 to 45, 50 to 57, 61, 62, 64, 67, 68, 81 to 96, 98, 100	81: BACnet reception status 82: BACnet token pass counter (Displays the count of received token) 83: BACnet valid APDU counter (Displays the count of valid APDU detection) 84: BACnet communication error counter (Displays the count of communication error) 85: Terminal FM/CA output level (Same display as Analog Output 0) 86: Terminal AM output level (Same display as Analog Output 1) The count of the setting values "82" and "83" returns to "0" if the count exceeds "9999". The upper limit of the count of the setting value "84" is "9999".
774 M101	**Second motor inertia (integer)**	9999		1 to 3, 5 to 14, 17, 18, 20, 23 to 25, 34, 38, 40 to 45, 50 to 57, 61, 62, 64, 67, 68, 81 to 96, 98, 100	
775 M102	**Second motor inertia (exponent)**				
776 M103	**Second motor protection current level**				
331 N030	**RS-485 communication station number**	0		0 to 127 *1	Set the inverter station number (node).
332 N031	**RS-485 communication speed**	96		96, 192, 384, 576, 768, 1152 *1*2	Set the communication speed. The setting value × 100 equals the communication speed. For example, the communication speed is 9600 bps when the setting value is "96".
390 N054	**% setting reference frequency**	60 Hz	50 Hz	1 to 590 Hz	Set a reference frequency of the set frequency.
549 N000	**Protocol selection**	0		0	Mitsubishi inverter (computer link) protocol
				1	Modbus-RTU protocol
				2	BACnet MS/TP protocol
726 N050	**Auto Baudrate/Max Master**	255		0 to 255	Auto baud rate (bit 7) 0: inactive, 1: active
					Max Master (bit 0 to bit 6) setting range: 0 to 127 Maximum address for master node
727 N051	**Max Info Frames**	1		1 to 255	Set the maximum number of frames that the inverter can transmit while it owns the token.
728 N052	**Device instance number (Upper 3 digits)**	0		0 to 419 (0 to 418)	Device identifier When the combination of **Pr.728 and Pr.729** is not within "0 to 4194302", the setting is out of range. When **Pr.728**="419", the setting range of **Pr.729** is "0 to 4302". When **Pr.729**="4303" or more, the setting range of **Pr.728** is "0 to 418".
729 N053	**Device instance number (Lower 4 digits)**	0		0 to 9999 (0 to 4302)	

*1 When the set value is outside of the setting range, the initial value is applied.

*2 When the Auto baudrate is used, the communication speed is changed to the detected communication speed.

◆Communication specifications

- The specifications conform to the BACnet standard of physical medium EIA-485.

Item		Description
Physical medium		EIA-485 (RS-485)
	Connection port	RS-485 terminals (PU connector is not available.)
	Data transfer method	NRZ encoding
	Baud rate	9600 bps, 19200 bps, 38400 bps, 57600 bps, 76800 bps, 115200 bps
	Start bit	Fixed to 1 bit
	Data length	Fixed to 8 bits
	Parity bit	Fixed to none
	Stop bit	Fixed to 1 bit
Network topology		Bus topology
Communication method		Token passing (token bus)
		Master-slave (Only the master is available for this product.)
Communication protocol		MS/TP (master-slave/token passing LAN)
Maximum connection		255 (up to 32 for one segment, addition with a repeater available)
Node number		0 to 127
	Master	0 to 127 (This product is the master.)
Supported property of BACnet standard object type		Refer to page 483.
Supported BIBBs (Annex K)		Refer to page 491.
BACnet standard device profile (Annex L)		Refer to page 491.
Segmentation		Not supported
Device address binding		Not supported

NOTE

- This product conforms to BACnet Application Specific Controller (B-ASC).
- This product is designed for multiple master network, therefore 2-wire type connection is supported.

◆Node with network bias resistors

- This product is a node with local bias resistors. Therefore at least one node must be a node with network bias resistors in the network configuration.
- When configuring the network with only this products, refer to the following, and make the node with network bias resistors. (When using two sets in one segment, insert them into both ends of the network.)

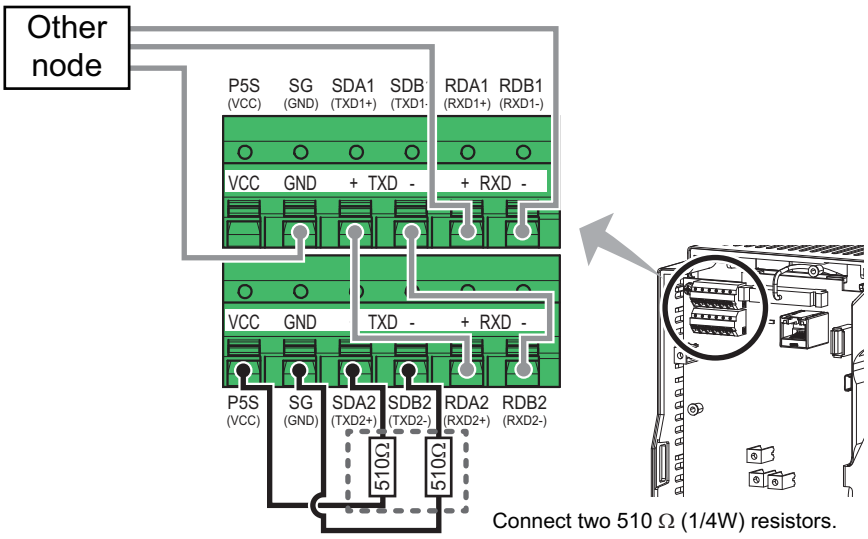

Connect two 510 Ω (1/4W) resistors.

◆BACnet reception status monitor (Pr.52)

• Set **Pr.52**="81" to monitor the BACnet communication status on the operation panel.

Monitor value	Status	Description	LF signal output
0	Idle	Never had BACnet communication	OFF
1	Automatic baud rate recognition	Automatic baud rate recognition (Communication error during automatic baud rate recognition is not counted.)	OFF
2	Not joined the network	Waiting for a token to own node	OFF
10	Data to own node	Received a token to own node	OFF
11		Received a supported request to own node (including broadcasting)	OFF
12		Received an unsupported request to own node (including broadcasting)	OFF
20	Data to other node	Received a token to other nodes	OFF
30	Node separated	Separated from token passing after joined in it	OFF
90	Error data	Detected a communication error	ON
91		Protocol error (LPDU, NPDU, APDU are not following the format regulations.)	ON

◆% setting reference frequency (Pr.390)

• Set a reference frequency of the set frequency. The setting value of **Pr.390 % setting reference frequency** is 100% reference. The ratio of the frequency command is converted to the set frequency in the following formula.

Set frequency = **% setting reference frequency** × Speed scale (Refer to page 485)

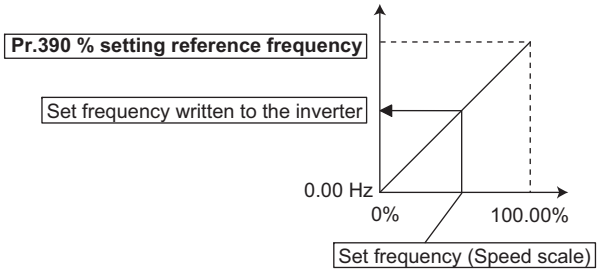

NOTE

- The % setting reference frequency cannot be set at less than the minimum frequency resolution of the inverter.
- The set frequency is written to RAM.
- The set frequency is applied at the writing of Speed scale. (The set frequency is not applied at the setting of **Pr.390**.)

◆Automatic baud rate recognition (Pr.726 Auto Baudrate/Max Master)

• Automatic changing of baud rate is available with **Pr.726** setting. When **Pr.726**="128 to 255", turn the power ON from OFF or reset the inverter to start automatic baud rate recognition.

Pr.726 setting	Operation
0 to 127	Automatic baud rate recognition is invalid. (The **Pr.332** setting is used as the baud rate.)
128 to 255	The inverter monitors the data on the communication bus, and automatically switches the baud rate. The recognized baud rate is written to **Pr.332**.

NOTE

- After the baud rate recognition, the recognized baud rate is written in EEPROM as the **Pr.332** setting regardless of the **Pr.342 Communication EEPROM write selection** setting.
- The BACnet status monitor displays "1" during automatic baud rate recognition.
- The communication error monitor count is not performed during automatic baud rate recognition.
- During automatic baud rate recognition, the inverter does not transmit data, but only accepts data.
- The baud rate switching operation cannot be finished if the inverter is not connected to the communication bus. (BACnet protocol will not be established.)
- The baud rate switching operation cannot be finished if the inverter is continuously receiving abnormal data during automatic baud rate switching. (BACnet protocol will not be established.)

◆Supported property of BACnet standard object type

R: Read only, W: Read/Write (Commandable values not supported), C: Read/Write (Commandable values supported)

Property	Object support condition						
	Analog Input	Analog Output	Analog Value	Binary Input	Binary Output	Binary Value	Device
APDU Timeout							R
Application Software Version							R
Database Revision							R
Device Address Binding							R
Event State	R	R	R	R	R	R	
Firmware Revision							R
Max APDU Length Accepted							R
Max Info Frames							W
Max Master							W
Model Name							R
Number of APDU Retries							R
Object Identifier	R	R	R	R	R	R	R
Object List							R
Object Name	R	R	R	R	R	R	R
Object Type	R	R	R	R	R	R	R
Out Of Service	R	R	R	R	R	R	
Polarity				R	R		
Present Value	R	C	C*1	R	C	C*1	
Priority Array		R	R*2		R	R*2	
Protocol Object Types Supported							R
Protocol Revision							R
Protocol Services Supported							R
Protocol Version							R
Relinquish Default		R	R*2		R	R*2	
Segmentation Supported							R
Status Flags	R	R	R	R	R	R	
System Status							R
Unit	R	R	R				
Vendor Identifier							R
Vendor Name							R

*1 This property is commandable for some instances of this object. Otherwise it is read/write.
*2 This property is supported only for instances of this object where the Present Value property is commandable.

◆Supported BACnet object

◆ANALOG INPUT

Object identifier	Object name	Present value access type*1	Description	Unit
0	Terminal 1	R	Represents actual input voltage of terminal 1. (The range varies depending on the **Pr.73 and Pr.267** settings. -10 to +10 V (-100% to +100%), -5 to +5 V (-100% to +100%))	percent (98)
1	Terminal 2	R	Represents actual input voltage (or input current) of terminal 2. (The range varies depending on the **Pr.73 and Pr.267** settings. 0 to 10 V (0% to 100%), 0 to 5 V (0% to 100%), 0 to 20 mA (0% to 100%))	percent (98)
2	Terminal 4	R	Represents actual input voltage (or input current) of terminal 4. (The range varies depending on the **Pr.73 and Pr.267** settings. 2 to 10 V (0% to 100%), 1 to 5 V (0% to 100%), 4 to 20 mA (0% to 100%))	percent (98)

*1 R: Read only, W: Read/Write (Commandable values not supported), C: Read/Write (Commandable values supported)

◆ANALOG OUTPUT

Object identifier	Object name	Present value access type*1	Description	Unit
0	Terminal FM (CA)	C	Controls actual output current level of terminal FM/CA. Control is available when **Pr.54 FM/CA terminal function selection**="85"*2. (Setting range: 0 to 200%)	percent (98)
1	Terminal AM	C	Controls actual output voltage level of terminal AM. Control is available when **Pr.158 AM terminal function selection**="86"*2. (Setting range: -200 to 200%)	percent (98)

*1 R: Read only, W: Read/Write (Commandable values not supported), C: Read/Write (Commandable values supported)
Values written to the objects that support the commandable values are stored in the Priority Array, even when "Write Access Denied" is returned due to inconsistency of the writing requirements such as the operating mode, on condition that the values are written within the setting range.

*2 Available regardless of the operation mode, operation command source, and speed command source.

◆ANALOG VALUE

Object identifier	Object name	Present value access type*1	Description	Unit
1	Output frequency	R	Represents the output frequency monitor.	hertz (27)
2	Output current	R	Represents the output current monitor.	amperes (3)
3	Output voltage	R	Represents the output voltage monitor.	volts (5)
6	Running speed	R	Represents the running speed monitor.	revolution-per-minute (104)
8	Converter output voltage	R	Represents the converter output voltage monitor.	volts (5)
14	Output power	R	Represents the output power monitor.	kilowatts (48)
17	Load meter	R	Represents the load meter monitor.	percent (98)
20	Cumulative energization time	R	Represents the cumulative energization time monitor.	hours (71)
23	Actual operation time	R	Represents the actual operation time monitor.	hours (71)

Object identifier	Object name	Present value access type*1	Description	Unit
25	Cumulative power	R	Represents the cumulative power monitor.	kilowatt-hours (19)
52	PID set point	R	Represents the PID set point monitor.	no-units (95)
54	PID deviation	R	Represents the PID deviation monitor. (Minus display is available with reference to 0%, in 0.1% increment.)	no-units (95)
67	PID measured value 2	R	Represents the PID measured value 2 monitor.	no-units (95)
92	Second PID set point	R	Represents the second PID set point monitor.	no-units (95)
94	Second PID deviation	R	Represents the second PID deviation monitor. (Minus display is available with reference to 0%, in 0.1% increment.)	no-units (95)
95	Second PID measured value 2	R	Represents the second PID measured value 2 monitor.	no-units (95)
200	Alarm history 1	R	Represents the fault history 1 (the latest fault) monitor.	no-units (95)
201	Alarm history 2	R	Represents the fault history 2 (second fault in past) monitor.	no-units (95)
202	Alarm history 3	R	Represents the fault history 3 (third fault in past) monitor.	no-units (95)
203	Alarm history 4	R	Represents the fault history 4 (fourth fault in past) monitor.	no-units (95)
300	Speed scale *2	C	Controls the ratio of the frequency command. (Setting range: 0.00 to 100.00) (Refer to page 482.)	percent (98)
310	PID set point CMD *2	C	Set the PID action set point. This object is the set point during PID operation if **Pr.128** = "60 or 61". (Setting range: 0.00 to 100.00)*3	no-units (95)
311	PID measured value CMD *2	C	Set the PID measured value. This object is the measured value during PID operation if **Pr.128** = "60 or 61". (Setting range: 0.00 to 100.00)*3	no-units (95)
312	PID deviation CMD *2	C	Set the PID deviation. (0.01 increment) This object is the deviation during PID operation if **Pr.128** = "50 or 51". (Setting range: -100.00 to 100.00)	percent (98)
320	Second PID set point CMD	C	Set the second PID action set point. This object is the set point during PID operation if **Pr.753** = "60 or 61". (Setting range: 0.00 to 100.00)*3	no-units (95)
321	Second PID measured value CMD	C	Set the second PID measured value. This object is the measured value during PID operation if **Pr.753** = "60 or 61". (Setting range: 0.00 to 100.00)*3	no-units (95)
322	Second PID deviation CMD	C	Set the second PID deviation. (0.01 increment) This object is the deviation during PID operation if **Pr.753** = "50 or 51". (Setting range: -100.00 to 100.00)	percent (98)
398	Mailbox parameter	W	Access to the properties which are not defined as objects are available. (Refer to page 488.)	no-units (95)
399	Mailbox value	W		no-units (95)
10007	Acceleration time	W	Set **Pr.7 Acceleration time**.	seconds (73)
10008	Deceleration time	W	Set **Pr.8 Deceleration time**.	seconds (73)

*1 R: Read only, W: Read/Write (Commandable values not supported), C: Read/Write (Commandable values supported)
Values written to the objects that support the commandable values are stored in the Priority Array, even when "Write Access Denied" is returned due to inconsistency of the writing requirements such as the operating mode, on condition that the values are written within the setting range.

*2 If communication speed command source is other than NET, the setting value can be written, but not to be applied.

*3 When both **C42 (Pr.1136) and C44 (Pr.1138)** ≠ "9999", the setting range is from the smaller coefficient to the lnarger coefficiet of **C42 (Pr.1136) and C44 (Pr.1138)**. Depending on the setting, the writing value and the reading value may not be the same at the minimum digit.

◆BINARY INPUT

Object identifier	Object name	Present value access type*1	Description (0: Inactive, 1: Active)
0	Terminal STF	R	Represents actual input of terminal STF.
1	Terminal STR	R	Represents actual input of terminal STR.
2	Terminal AU	R	Represents actual input of terminal AU.
3	Terminal RT	R	Represents actual input of terminal RT.
4	Terminal RL	R	Represents actual input of terminal RL.
5	Terminal RM	R	Represents actual input of terminal RM.
6	Terminal RH	R	Represents actual input of terminal RH.
7	Terminal JOG	R	Represents actual input of terminal JOG.
8	Terminal MRS	R	Represents actual input of terminal MRS.
9	Terminal STOP	R	Represents actual input of terminal STOP.
10	Terminal RES	R	Represents actual input of terminal RES.
11	Terminal CS	R	Represents actual input of terminal CS.
100	Terminal RUN	R	Represents actual output of terminal RUN.
101	Terminal SU	R	Represents actual output of terminal SU.
102	Terminal IPF	R	Represents actual output of terminal IPF.
103	Terminal OL	R	Represents actual output of terminal OL.
104	Terminal FU	R	Represents actual output of terminal FU.
105	Terminal ABC1	R	Represents actual output of terminal ABC1.
106	Terminal ABC2	R	Represents actual output of terminal ABC2.
107	Terminal SO	R	Represents actual output of terminal SO.

*1 R: Read only, W: Read/Write (Commandable values not supported), C: Read/Write (Commandable values supported)

◆BINARY OUTPUT

Object identifier	Object name	Present value access type*1	Description (0: Inactive, 1: Active)
0	Terminal RUN CMD	C	Represents actual output of terminal RUN. Available when **Pr.190 RUN terminal function selection**="82 or 182".*2
1	Terminal SU CMD	C	Controls actual output of terminal SU. Available when **Pr.191 SU terminal function selection**="82 or 182".*2
2	Terminal IPF CMD	C	Controls actual output of terminal IPF. Available when **Pr.192 IPF terminal function selection**="82 or 182".*2
3	Terminal OL CMD	C	Controls actual output of terminal OL. Available when **Pr.193 OL terminal function selection**="82 or 182".*2
4	Terminal FU CMD	C	Controls actual output of terminal FU. Available when **Pr.194 FU terminal function selection**="82 or 182".*2
5	Terminal ABC1 CMD	C	Controls actual output of terminal ABC1. Available when **Pr.195 ABC1 terminal function selection**="82 or 182".*2
6	Terminal ABC2 CMD	C	Controls actual output of terminal ABC2. Available when **Pr.196 ABC2 terminal function selection**="82 or 182".*2

*1 R: Read only, W: Read/Write (Commandable values not supported), C: Read/Write (Commandable values supported)
Values written to the objects that support the commandable values are stored in the Priority Array, even when "Write Access Denied" is returned due to inconsistency of the writing requirements such as the operating mode, on condition that the values are written within the setting range.

*2 Available regardless of the operation mode, operation command source, and speed command source.

◆BINARY VALUE

Object identifier	Object name	Present value access type*1	Description
0	Inverter running	R	Represents inverter running (RUN signal) status.
11	Inverter operation ready	R	Represents inverter operation ready (RY signal) status.
98	Alarm output	R	Represents alarm output (LF signal) status.
99	Fault output	R	Represents fault output (ALM signal) status.
200	Inverter running reverse	R	Represents inverter reverse running status.
300	Control input instruction AU	C	Controls the function assigned to terminal AU. Setting 1 in this object turns ON the signal assigned to **Pr.184 AU terminal function selection**.
301	Control input instruction RT	C	Controls the function assigned to terminal RT. Setting 1 in this object turns ON the signal assigned to **Pr.183 RT terminal function selection**.
302	Control input instruction RL	C	Controls the function assigned to terminal RL. Setting 1 in this object turns ON the signal assigned to **Pr.180 RL terminal function selection**.
303	Control input instruction RM	C	Controls the function assigned to terminal RM. Setting 1 in this object turns ON the signal assigned to **Pr.181 RM terminal function selection**.
304	Control input instruction RH	C	Controls the function assigned to terminal RH. Setting 1 in this object turns ON the signal assigned to **Pr.182 RH terminal function selection**.
305	Control input instruction JOG *2	C	Controls the function assigned to terminal JOG. Setting 1 in this object turns ON the signal assigned to **Pr.185 JOG terminal function selection**.
306	Control input instruction MRS	C	Controls the function assigned to terminal MRS. Setting 1 in this object turns ON the signal assigned to **Pr.187 MRS terminal function selection**.
307	Control input instruction STOP *2	C	Controls the function assigned to terminal STOP. Setting 1 in this object turns ON the signal assigned to **Pr.188 STOP terminal function selection**.
308	Control input instruction RES *2	C	Controls the function assigned to terminal RES. Setting 1 in this object turns ON the signal assigned to **Pr.189 RES terminal function selection**.
309	Control input instruction CS *2	C	Controls the function assigned to terminal CS. Setting 1 in this object turns ON the signal assigned to **Pr.186 CS terminal function selection**.
400	Run/Stop	C	Controls the start/stop command. The start command is written after the Speed scale is applied. *3 1: Start 0: Stop
401	Forward/Reverse	C	Controls the forward/reverse rotation. *3 1: Reverse rotation 0: Forward rotation
402	Fault reset	C	Clears fault output status. (Release of an inverter fault without inverter reset is available.)

*1 R: Read only, W: Read/Write (Commandable values not supported), C: Read/Write (Commandable values supported)
Values written to the objects that support the commandable values are stored in the Priority Array, even when "Write Access Denied" is returned due to inconsistency of the writing requirements such as the operating mode, on condition that the values are written within the setting range.

*2 The following signals cannot be controlled by the network: Jog operation, selection of automatic restart after instantaneous power failure, start self-holding, and reset. Therefore control input instruction JOG, STOP, RES, and CS are invalid in the initial status. To use the control input instruction JOG, STOP, RES, and CS, change the signals with **Pr.185, Pr.186, Pr.188, Pr.189 (input terminal function selection)**. (Refer to page 329.) (Reset is available with ReinitializeDevice.)

*3 If communication operation command source is other than NET, the setting value can be written, but not to be applied.

◆Mailbox parameter / Mailbox value (BACnet registers)

- Access to the properties which are not defined as objects are available by using "Mailbox parameter" and "Mailbox value".
- To read a property, write the register of the intended property to "Mailbox parameter", and then read "Mailbox value". To write a property, write the register of the intended property to "Mailbox parameter", and then write a value to "Mailbox value".
- System environment variable

Register	Definition	Read/ write	Remarks
40010	Operation mode / inverter setting	Read/write	For write, set data as the operation mode setting. For read, data is read as the operation mode status.

<Operation mode / inverter setting>

Mode	Read value	Write value
EXT	H0000	H0010 *1
PU	H0001	H0011 *1
EXT JOG	H0002	-
PU JOG	H0003	-
NET	H0004	H0014
PU + EXT	H0005	-

*1 Writing is available depending on the **Pr.79 and Pr.340** settings. For the details, refer to page 209.
The restrictions depending on the operation mode changes according to the computer link specifications.

- Real time monitor

  The register numbers and the monitor items are the same as those of the Modbus-RTU real time monitor. Refer to the Modbus-RTU real time monitor on page 263.
- Parameter

Pr.	Register	Parameter name	Read/ write	Remarks
0 to 999	41000 to 41999	Refer to the parameter list (page 112) for parameter names.	Read/write	The parameter number + 41000 is the register number.
C2 (902)	41902	Terminal 2 frequency setting bias (frequency)	Read/write	
C3 (902)	42092	Terminal 2 frequency setting bias (analog value)	Read/write	Analog value (%) set to **C3 (902)**
	43902	Terminal 2 frequency setting bias (terminal analog value)	Read	Analog value (%) of the voltage (current) applied to the terminal 2
125(903)	41903	Terminal 2 frequency setting gain (frequency)	Read/write	
C4 (903)	42093	Terminal 2 frequency setting gain (analog value)	Read/write	Analog value (%) set to **C4 (903)**
	43903	Terminal 2 frequency setting gain (terminal analog value)	Read	Analog value (%) of the voltage (current) applied to the terminal 2
C5 (904)	41904	Terminal 4 frequency setting bias (frequency)	Read/write	
C6 (904)	42094	Terminal 4 frequency setting bias (analog value)	Read/write	Analog value (%) set to **C6 (904)**
	43904	Terminal 4 frequency setting bias (terminal analog value)	Read	Analog value (%) of the current (voltage) applied to the terminal 4
126(905)	41905	Terminal 4 frequency setting gain (frequency)	Read/write	
C7 (905)	42095	Terminal 4 frequency setting gain (analog value)	Read/write	Analog value (%) set to **C7 (905)**
	43905	Terminal 4 frequency setting gain (terminal analog value)	Read	Analog value (%) of the current (voltage) applied to the terminal 4
C12 (917)	41917	Terminal 1 bias frequency (speed)	Read/write	

Pr.	Register	Parameter name	Read/ write	Remarks
C13 (917)	42107	Terminal 1 bias (speed)	Read/write	Analog value (%) set to **C13 (917)**
	43917	Terminal 1 bias (speed) (terminal analog value)	Read	Analog value (%) of the voltage applied to the terminal 1
C14 (918)	41918	Terminal 1 gain frequency (speed)	Read/write	
C15 (918)	42108	Terminal 1 gain (speed)	Read/write	Analog value (%) set to **C15 (918)**
	43918	Terminal 1 gain (speed) (terminal analog value)	Read	Analog value (%) of the voltage applied to the terminal 1
C16 (919)	41919	Terminal 1 bias command (torque)	Read/write	
C17 (919)	42109	Terminal 1 bias (torque)	Read/write	Analog value (%) set to **C17 (919)**
	43919	Terminal 1 bias (torque) (terminal analog value)	Read	Analog value (%) of the voltage applied to the terminal 1
C18 (920)	41920	Terminal 1 gain command (torque)	Read/write	
C19 (920)	42110	Terminal 1 gain (torque)	Read/write	Analog value (%) set to **C19 (920)**
	43920	Terminal 1 gain (torque) (terminal analog value)	Read	Analog value (%) of the voltage applied to the terminal 1
C9 (930)	42120	Current output bias current	Read/write	Analog value (%) set to **C9 (930)**
C11 (931)	42121	Current output gain current	Read/write	Analog value (%) set to **C11 (931)**
C38 (932)	41932	Terminal 4 bias command (torque)	Read/write	
C39 (932)	42122	Terminal 4 bias (torque)	Read/write	Analog value (%) set to **C39 (932)**
	43932	Terminal 4 bias (torque) (terminal analog value)	Read	Analog value (%) of the current (voltage) applied to the terminal 4
C40 (933)	41933	Terminal 4 gain command (torque)	Read/write	
C41 (933)	42123	Terminal 4 gain (torque)	Read/write	Analog value (%) set to **C41 (933)**
	43933	Terminal 4 gain (torque) (terminal analog value)	Read	Analog value (%) of the current (voltage) applied to the terminal 4
C42 (934)	41934	PID display bias coefficient	Read/write	
C43 (934)	42124	PID display bias analog value	Read/write	Analog value (%) set to **C43 (934)**
	43934	PID display bias analog value (terminal analog value)	Read	Analog value (%) of the current (voltage) applied to the terminal 4
C44 (935)	41935	PID display gain coefficient	Read/write	
C45 (935)	42125	PID display gain analog value	Read/write	Analog value (%) set to **C45 (935)**
	43935	PID display gain analog value (terminal analog value)	Read	Analog value (%) of the current (voltage) applied to the terminal 4
1000 to 1999	45000 to 45999	Refer to the parameter list (page 112) for parameter names.	Read/write	The parameter number + 44000 is the register number.

• Faults history

Register	Definition	Read/write	Remarks
40501	Faults history 1	Read/write	Being 2 bytes in length, the data is stored as "H00○○". Refer to the lowest 1 byte for the error code. (Refer to page 533 for the error codes.) Performing write using the register 40501 batch-clears the faults history. Set any value as data.
40502	Faults history 2	Read	
40503	Faults history 3	Read	
40504	Faults history 4	Read	
40505	Faults history 5	Read	
40506	Faults history 6	Read	
40507	Faults history 7	Read	
40508	Faults history 8	Read	

(N) Operation via communication and its settings

• Model information monitor

Register	Definition	Read/write	Remarks
44001	Inverter type (1st and 2nd characters)	Read	Reading inverter type in ASCII code. "H20" (blank code) is set for blank area. Example) For the "FR-F840-1 (FM type)", H46, H52, H2D, H46, H38, H34, H30, H2D, H31, H20...H20
44002	Inverter type (3rd and 4th characters)	Read	
44003	Inverter type (5th and 6th characters)	Read	
44004	Inverter type (7th and 8th characters)	Read	
44005	Inverter type (9th and 10th characters)	Read	
44006	Inverter type (11th and 12th characters)	Read	
44007	Inverter type (13th and 14th characters)	Read	
44008	Inverter type (15th and 16th characters)	Read	
44009	Inverter type (17th and 18th characters)	Read	
44010	Inverter type (19th and 20th characters)	Read	
44011	Capacity (1st and 2nd characters)	Read	Reading inverter capacity in ASCII code. Data is read in increments of 0.1 kW, and rounds down to 0.01 kW increments. "H20" (blank code) is set for blank area. Example) 0.75K..." 7" (H20, H20, H20, H20, H20, H37)
44012	Capacity (3rd and 4th characters)	Read	
44013	Capacity (5th and 6th characters)	Read	

NOTE

• When a 32-bit parameter setting or monitor item is read and the value to be read exceeds HFFFF, HFFFF is returned.

◆ANNEX A - PROTOCOL IMPLEMENTATION CONFORMANCE STATEMENT (NORMATIVE)

(This annex is part of this Standard and is required for its use.)

BACnet Protocol Implementation Conformance Statement

Date: 1st Jul 2014
Vendor Name: Mitsubishi Electric Corporation
Product Name: Inverter
Product Model Number: FR-F820-1, FR-F820-2, FR-F840-1, FR-F840-2, FR-F842-1, FR-F842-2
Application Software Version: 8463*
Firmware Revision: 1.00
BACnet Protocol Revision: 4

Product Description:

_____

_____

_____

BACnet Standardized Device Profile (Annex L):

☐ BACnet Operator Workstation (B-OWS)
☐ BACnet Building Controller (B-BC)
☐ BACnet Advanced Application Controller (B-AAC)
☒ BACnet Application Specific Controller (B-ASC)
☐ BACnet Smart Sensor (B-SS)
☐ BACnet Smart Actuator (B-SA)

List all BACnet Interoperability Building Blocks Supported (Annex K):

DS-RP-B, DS-WP-B, DM-DDB-B, DM-DOB-B, DM-DCC-B, DM-RD-B

Segmentation Capability:

☐ Segmented requests supported Window Size _____
☐ Segmented responses supported Window Size _____

(N) Operation via communication and its settings

Standard Object Types Supported:

An object type is supported if it may be present in the device. For each standard Object Type supported provide the following data:

1) Whether objects of this type are dynamically creatable using the CreateObject service
2) Whether objects of this type are dynamically deletable using the DeleteObject service
3) List of the optional properties supported
4) List of all properties that are writable where not otherwise required by this standard
5) List of all properties that are conditionally writable where not otherwise required by this standard
6) List of proprietary properties and for each its property identifier, datatype, and meaning
7) List of any property range restrictions

Dynamic object creation and deletion is not supported.

For the object types supported by the FR-F800 series, refer to **page 484**.

Data Link Layer Options:

☐ BACnet IP, (Annex J)
☐ BACnet IP, (Annex J), Foreign Device
☐ ISO 8802-3, Ethernet (Clause 7)
☐ ANSI/ATA 878.1, 2.5 Mb. ARCNET (Clause 8)
☐ ANSI/ATA 878.1, RS-485 ARCNET (Clause 8), baud rate(s)_____
☒ MS/TP master (Clause 9), baud rate(s): 9600, 19200, 38400, 76800
☐ MS/TP slave (Clause 9), baud rate(s): _____
☐ Point-To-Point, EIA 232 (Clause 10), baud rate(s):_____
☐ Point-To-Point, modem, (Clause 10), baud rate(s): _____
☐ LonTalk, (Clause 11), medium: _____
☐ Other: _____

Device Address Binding:

Is static device binding supported? (This is currently necessary for two-way communication with MS/TP slaves and certain other devices.) ☐ Yes ☒ No

Networking Options:

☐ Router, Clause 6 - List all routing configurations, e.g., ARCNET-Ethernet, Ethernet-MS/TP, etc.
☐ Annex H, BACnet Tunneling Router over IP
☐ BACnet/IP Broadcast Management Device (BBMD)
Does the BBMD support registrations by Foreign Devices? ☐ Yes ☐ No

Character Sets Supported:

Indicating support for multiple character sets does not imply that they can all be supported simultaneously.
☒ ANSI X3.4 ☐ IBM™/Microsoft™ DBCS ☐ ISO 8859-1
☐ ISO 10646 (UCS-2) ☐ ISO 10646 (UCS-4) ☐ JIS C 6226

If this product is a communication gateway, describe the types of non-BACnet equipment/ networks(s) that the gateway supports:

_____
_____
_____

5.12.8 USB device communication

A personal computer and an inverter can be connected with a USB cable. Setup of the inverter can be easily performed with FR Configurator2.
The inverter can be connected simply to a personal computer by a USB cable.

Pr.	Name	Initial value	Setting range	Description
547 *1 **N040**	**USB communication station number**	0	0 to 31	Inverter station number specification
548 *1 **N041**	**USB communication check time interval**	9999	0	USB communication is possible, however the inverter will trip (E.USB) when the mode changes to the PU operation mode.
			0.1 to 999.8 s	Set the communication check time interval. If a no-communication state persists for longer than the permissible time, the inverter will trip (E.USB).
			9999	No communication check

*1 Changed setting value becomes valid at power ON or the inverter reset.

◆USB communication specifications

Interface	Conforms to USB1.1 (USB2.0 full speed)
Transmission speed	12 Mbps
Wiring length	Maximum 5 m
Connector	USB mini B connector (receptacle)
Power supply	Self-powered
Recommended USB cable	MR-J3USBCBL3M (cable length 3 m)

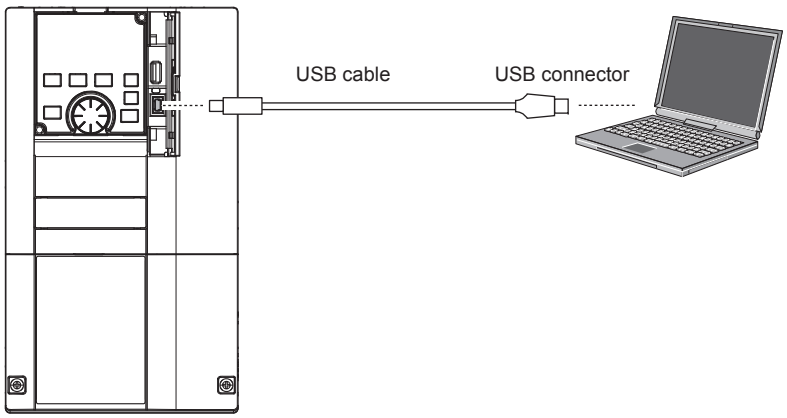

- At the initial setting (**Pr.551 PU mode operation command source selection** = "9999"), communication with FR Configurator2 can be made in the PU operation mode simply by connecting a USB cable. To fix the command source to the USB connector in the PU operation mode, set "3" to **Pr.551.**
- Parameter setting and monitoring can be performed by FR Configurator2. For details, refer to the Instruction Manual of FR Configurator2.

Parameters referred to

Pr.551 PU mode operation command source selection page 210

5.12.9 Automatic connection with GOT

When the automatic connection is enabled in the GOT2000 series, the inverter can communicate with the GOT2000 series with only setting the station number and connecting the GOT. This eliminates the need for the communication parameter setting.

Pr.	Name	Initial value	Setting range	Description
117 **N020**	**PU communication station number**	0	0 to 31	Set the inverter station numbers. The inverter station number setting is required when multiple inverters are connected to one GOT (PU connector communication).
331 **N030**	**RS-485 communication station number**	0	0 to 31 (0 to 247)*1*2	Set the inverter station numbers. The inverter station number setting is required when multiple inverters are connected to one GOT (RS-485 terminal communication).

*1 When **Pr.549 Protocol selection** = "1" (Modbus-RTU protocol), the setting range is as shown in the parentheses.

*2 When the set value is outside of the setting range, the initial value is applied.

◆Automatic connection system configuration

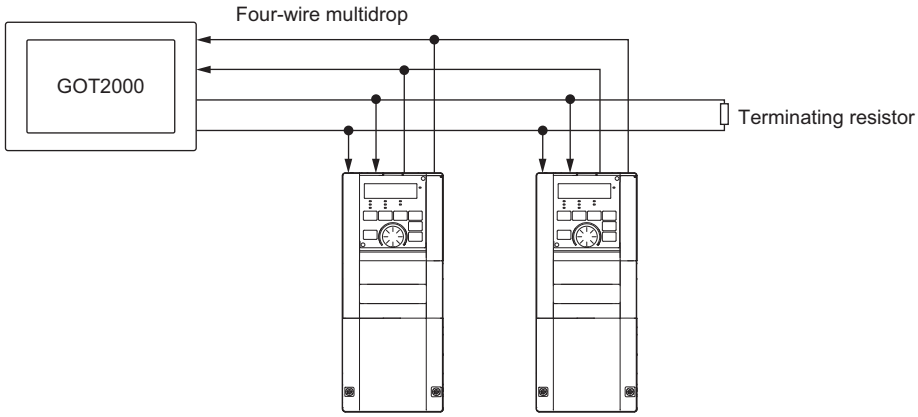

◆GOT2000 series automatic recognition

- When the GOT2000 series is connected, the parameters required for the GOT connection are automatically changed by setting the automatic recognition on the GOT2000 series side.
- Set the station number (**Pr.117** or **Pr.331**) of the inverter before the automatic recognition is performed.
- Connect all the stations of inverters with GOT before the automatic recognition is performed. The inverter newly added after automatic recognition will not be recognized automatically. (When an inverter is added, perform the initial setting in **Pr.999 Automatic parameter setting** or set the automatic recognition on the GOT side again.)

Automatic change item	Automatic change parameter		Setting value after change
	PU connector connection	RS-485 terminal connection	
Communication speed	**Pr.118**	**Pr.332**	Depending on the setting of the connected device on the GOT side.
Data length/stop bit	**Pr.119**	**Pr.333**	
Parity	**Pr.120**	**Pr.334**	
Waiting time setting	**Pr.123**	**Pr.337**	
CR/LF selection	**Pr.124**	**Pr.341**	
Number of communication retries	**Pr.121**	**Pr.335**	9999 (fixed)
Communication check time interval	**Pr.122**	**Pr.336**	9999 (fixed)
Protocol selection	— (**Pr.549** holds the value before the automatic recognition.)	**Pr.549**	0 (fixed to Mitsubishi inverter protocol)

NOTE

- If the automatic recognition cannot be performed, initial setting in **Pr.999** is required.
- For connecting the inverter to the GOT2000 series using the RS-485 terminal block, set **Pr.549 Protocol selection** = "0 (initial value) or 1".
- For connection to a device other than the GOT2000 series, initial setting in **Pr.999** is required.
- For details, refer to the GOT2000 Series Connection Manual (Mitsubishi Product).

Parameters referred to

Pr.999 Automatic parameter setting page 173

5.13 (G) Control parameters

Purpose	Parameter to set			Refer to page
To set the starting torque manually	Manual torque boost	P.G000, P.G010	Pr.0, Pr.46	496
To set the motor constant	Base frequency, base frequency voltage	P.G001, P.G002, P.G011	Pr.3, Pr.19, Pr.47	497
To select the V/F pattern matching the application	Load pattern selection	P.G003	Pr.14	499
To perform energy saving operation	Energy saving operation	P.G030	Pr.60	500
To use a special motor	Adjustable 5 points V/F	P.C100, P.G040 to P.G049	Pr.71, Pr.100 to Pr.109	501
To compensate the motor slip amount when replacing an SF-JR motor with an SF-PR motor	SF-PR slip amount adjustment mode	P.G060, P.G061	Pr.673, Pr.674	502
To adjust the motor braking torque	DC injection brake	P.G100, P.G101, P.G110	Pr.10 to Pr.12	502
To coast the motor to a stop	Output stop function	P.G105	Pr.522	505
	Selection of motor stop method	P.G106	Pr.250	507
To use the regeneration unit to increase the motor braking torque	Regenerative brake selection	P.E300, P.T721	Pr.30, Pr.599	508
To operate the inverter with DC power supply	DC feeding mode	P.E300	Pr.30	508
To avoid overvoltage alarm due to regenerative driving by automatic adjustment of the output frequency	Regeneration avoidance function	P.G120 to P.G125	Pr.882 to Pr.886, Pr.665	514
To decrease the deceleration time of the motor	Increased magnetic excitation deceleration	P.G130 to P.G132	Pr.660 to Pr.662	517
To select the control method	Control method selection	P.G200	Pr.800	143
To secure the low-speed torque by compensating the slip of the motor	Slip compensation	P.G203 to P.G205	Pr.245 to Pr.247	518
To adjust the speed control gain	Speed control gain	P.G211, P.G212 P.G311, P.G312	Pr.820, Pr.821, Pr.830, Pr.831	154
To adjust the torque control gain	Torque control gain	P.G213, P.G214, P.G313, P.G314	Pr.824, P.825, Pr.834, P.835	154
To stabilizes torque feedback signal	Torque detection filter	P.G216, P.G316	Pr.827, Pr.837	158
To suppress the machine resonance	Speed smoothing control	P.G410, P.G411	Pr.653, Pr.654	519
To adjust the speed gain for Advanced magnetic flux vector control	Speed control gain	P.G932, P.G942	Pr.89, Pr.569	147

5.13.1 Manual torque boost V/F

Voltage drop in the low-frequency range can be compensated, improving reduction of the motor torque in the low-speed range.

- Motor torque in the low-frequency range can be adjusted according to the load, increasing the motor torque at the start up.
- By using the RT signal, it is possible to switch between 2 types of torque boost.

Pr.	Name	Initial value	Setting range	Description
0 G000	Torque boost	6%*1	0 to 30%	Set the output voltage at 0 Hz in %.
		4%*2		
		3%*3		
		2%*4		
		1.5%*5		
		1%*6		
46 G010	Second torque boost	9999	0 to 30%	Set the torque boost value at when RT signal is ON.
			9999	Without second torque boost

*1 Initial value for the FR-F820-00046(0.75K) or lower and FR-F840-00023(0.75K) or lower.
*2 Initial values for the FR-F820-00077(1.5K) to FR-F820-00167(3.7K), FR-F840-00038(1.5K) to FR-F840-00083(3.7K).
*3 Initial values for the FR-F820-00250(5.5K), FR-F820-00340(7.5K), FR-F840-00126(5.5K), FR-F840-00170(7.5K).
*4 Initial values for the FR-F820-00490(11K) to FR-F820-01540(37K), FR-F840-00250(11K) to FR-F840-00770(37K).
*5 Initial value for the FR-F820-01870(45K), FR-F820-02330(55K), FR-F840-00930(45K), FR-F840-01160(55K).
*6 Initial value for the FR-F820-03160(75K) or higher and FR-F840-01800(75K) or higher.

◆Starting torque adjustment

- Assuming **Pr.19 Base frequency voltage** is 100%, set the output voltage at 0 Hz to **Pr.0 (Pr.46, Pr.112)** in percentage.
- Perform the adjustment of the parameter little by little (approximately 0.5%), and confirm the status of the motor each time. The motor may overheat when the value is set too high. Do not use more than 10% as a guideline.

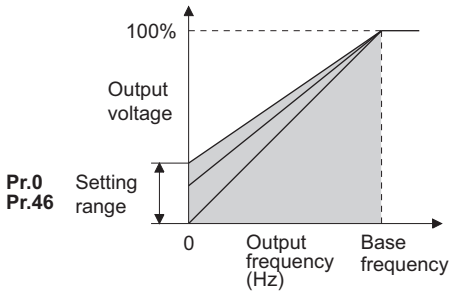

◆Setting multiple torque boosts (RT signal, Pr.46)

- When changing the torque boost depending on the usage or when using single inverter switching between multiple motors, use the second torque boost.
- **Pr.46 Second torque boost** will become enabled when the RT signal turns ON.

NOTE

- The RT signal acts as the second function selection signal and makes the other second functions valid. (Refer to page 333.)
- The RT signal is assigned to the terminal RT in the initial status. Set "3" in any of **Pr.178 to Pr.189 (input terminal function selection)** to assign the RT signal to another terminal.
- Set a larger value when the distance between the inverter and the motor is long or when there is not enough motor torque in the low-speed range. It may cause overcurrent trip when it is set too large.
- Setting for **Pr.0** and **Pr.46** becomes enabled only when the V/F control is selected.
- When the initial value is set in **Pr.0**, the **Pr.0** setting is automatically changed by changing the **Pr.71 Applied motor** setting. (Refer to page 337)
- Changing the terminal assignment using **Pr.178 to Pr.189 (input terminal function selection)** may affect the other functions. Set parameters after confirming the function of each terminal.

Parameters referred to

Pr.3 Base frequency, Pr.19 Base frequency voltage page 497
Pr.71 Applied motor page 337
Pr.178 to Pr.182 (input terminal function selection) page 329

5.13.2 Base frequency, voltage V/F

Use this function to adjust the inverter outputs (voltage, frequency) to match with the motor rating.

Pr.	Name	Initial value		Setting range	Description
		FM	CA		
3 G001	**Base frequency**	60 Hz	50 Hz	0 to 590 Hz	Set the frequency at the rated motor torque. (50 Hz/60 Hz)
19 G002	**Base frequency voltage**	9999	8888	0 to 1000 V	Set the base voltage.
				8888	95% of the power supply voltage
				9999	Same as the power supply voltage
47 G011	**Second V/F (base frequency)**	9999		0 to 590 Hz	Set the base frequency at the RT signal ON.
				9999	Second V/F disabled

◆Setting of base frequency (Pr.3)

- When operating a standard motor, generally set the rated frequency of the motor in **Pr.3 Base frequency**. When the motor operation require switching to the commercial power supply, set the power supply frequency in **Pr.3**.
- When the frequency on the motor rating plate is only "50 Hz", make sure to set to "50 Hz". When it is set to "60 Hz", the voltage will drop too much, causing insufficient torque. As a result, the inverter may trip due to overload.
  A caution is required especially in case of **Pr.14 Load pattern selection** = "1" (variable torque load).
- When using the Mitsubishi constant torque motor, set **Pr.3** to 60 Hz.

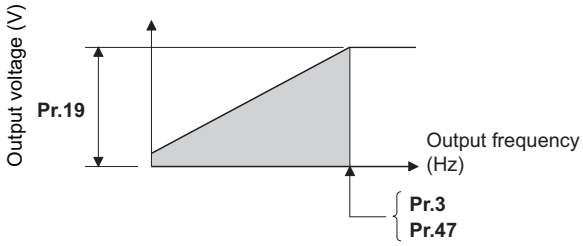

◆Setting multiple base frequencies (Pr.47)

- To change the base frequency when using single inverter switching between multiple motors, use **Pr.47 Second V/F (base frequency)**.
- **Pr.47** will become enabled when the RT signal turns ON.

NOTE

- The RT signal acts as the second function selection signal and makes the other second functions valid. (Refer to page 333.)
- The RT signal is assigned to the terminal RT in the initial status. It is also possible to assign the RT signal to other terminal by setting "3" on **Pr.178 to Pr.189 (input terminal function selection)**.

◆Setting of base frequency voltage (Pr.19)

- For **Pr.19 Base frequency voltage**, set the base voltage (rated motor voltage, etc.).
- When it is set lower than the power supply voltage, maximum output voltage of the inverter will be the voltage set in **Pr.19**.
- **Pr.19** can be used in following cases.

(a) Regenerative driving (continuous regeneration, etc.) is performed often
Output voltage will get higher than the specification during the regenerative driving, which may cause overcurrent trip (E.OC[]) by the increase in motor current.

(b) When the fluctuation of power supply voltage is high
When the power supply voltage exceeds the rated voltage of the motor, fluctuation of rotation speed or overheating of motor may occur due to excessive torque or increase in motor current.

NOTE

- When the Advanced magnetic flux vector control or PM motor control is selected, **Pr.3, Pr.47 and Pr.19** will become disabled, and **Pr.83 and Pr.84** will become enabled.
  However, S-pattern curve with **Pr.29 Acceleration/deceleration pattern selection** = "1" (S-pattern acceleration/deceleration A) will make **Pr.3** or **Pr.47** enabled. (S-pattern curve at the time of the PM motor control is the rated frequency of the motor.)
- When **Pr.71 Applied motor** = "2" (adjustable 5 points V/F), setting for **Pr.47** will become disabled. Also, **Pr.19** cannot be set to "8888" or "9999".
- Changing the terminal assignment using **Pr.178 to Pr.189 (input terminal function selection)** may affect the other functions. Set parameters after confirming the function of each terminal.

Parameters referred to

Pr.14 Load pattern selection page 499
Pr.29 Acceleration/deceleration pattern selection page 191
Pr.71 Applied motor page 337
Pr.83 Rated motor voltage, Pr.84 Rated motor frequency page 341
Pr.178 to Pr.189 (input terminal function selection) page 329

5.13.3 Load pattern selection V/F

Optimal output characteristics (V/F characteristics) for application or load characteristics can be selected.

Pr.	Name	Initial value	Setting range	Description
14 G003	Load pattern selection	1	0	For constant-torque load
			1	For variable-torque load

◆Application for constant-torque load (Pr.14 = "0")

- The output voltage will change linearly against the output frequency at the base frequency or lower.
- Set this parameter when driving a load that has constant load torque even when the rotation speed is changed, such as conveyor, dolly, or roll drive.

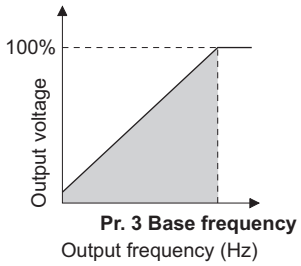

POINT

- Select for constant-torque load (setting value "0") even for fan and pump in following cases.
  - When accelerating a blower with large moment of inertia (J) in a short period of time.
  - When it is a constant-torque load such as rotary pump or gear pump.
  - When the load torque increases in low speed such as screw pump.

◆Application for variable-torque load (Pr.14 = "1", initial value)

- The output voltage will change in square curve against the output frequency at the base frequency or lower. (1.75th-power curve for FR-F820-01540(37K) or higher, and FR-F840-00770(37K) or higher)
- Set this parameter when driving a load with load torque change proportionally against the square of the rotation speed, such as fan and pump.

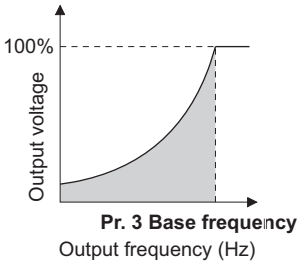

NOTE

- **Pr.14** will become enabled at the time of V/F control.

Parameters referred to

Pr.0 Torque boost page 496
Pr.3 Base frequency page 497
Pr.178 to Pr.182 (input terminal function selection) page 329

5.13.4 Energy saving control V/F Magnetic flux

Inverter will perform energy saving control automatically even when the detailed parameter settings are made.
It is appropriate for applications such as fan and pump.

Pr.	Name	Initial value	Setting range	Description
60 **G030**	**Energy saving control selection**	0	0	Normal operation
			4	Energy saving operation
			9	Optimum excitation control

◆Energy saving operation (setting "4")

- Setting **Pr.60** = "4" will select the energy saving operation.
- With the energy saving operation, the inverter will automatically control the output voltage so the inverter output power during the constant-speed operation will become minimal.
- Energy saving operation will be enabled under V/F control.

◆Optimum excitation control (setting "9")

- Setting **Pr.60** = "9" will select the Optimum excitation control.
- The Optimum excitation control is a control method to decide the output voltage by controlling the excitation current so the efficiency of the motor is maximized.
- Optimum excitation control will be enabled under V/F control and Advanced magnetic flux vector control.

NOTE

- An energy saving effect is not expected with the energy saving operation mode for applications with high load torque or with the equipment with frequent acceleration and deceleration.
- An energy saving effect is not expected with the Optimum excitation control mode when the motor capacity is extremely small compared with the inverter capacity or when multiple motors are connected to a single inverter.
- When the energy saving operation mode or Optimum excitation control mode is selected, the deceleration time may become longer than setting value. Also, it may cause overvoltage more often compared to constant-torque load characteristics, so set the deceleration time longer.
- When the motor becomes unstable during the acceleration, set the acceleration time longer.
- Output current may increase slightly with the energy saving operation mode or the Optimum excitation control mode since the output voltage is controlled.

5.13.5 Adjustable 5 points V/F

By setting a desired V/F characteristic from the start up to the base frequency or base voltage with the V/F control (frequency voltage/frequency), a dedicated V/F pattern can be generated.
Optimal V/F pattern matching the torque characteristics of the facility can be set.

Pr.	Name	Initial value	Setting range	Description
71 C100	**Applied motor**	0	2	Standard motor (such as SF-JR) Adjustable 5 points V/F
			Others	Refer to page 337.
100 G040	**V/F1 (first frequency)**	9999	0 to 590 Hz, 9999	Set each point of the V/F pattern (frequency, voltage). 9999: Do not set V/F
101 G041	**V/F1 (first frequency voltage)**	0 V	0 to 1000 V	
102 G042	**V/F2 (second frequency)**	9999	0 to 590 Hz, 9999	
103 G043	**V/F2 (second frequency voltage)**	0 V	0 to 1000 V	
104 G044	**V/F3 (third frequency)**	9999	0 to 590 Hz, 9999	
105 G045	**V/F3 (third frequency voltage)**	0 V	0 to 1000 V	
106 G046	**V/F4 (fourth frequency)**	9999	0 to 590 Hz, 9999	
107 G047	**V/F4 (fourth frequency voltage)**	0 V	0 to 1000 V	
108 G048	**V/F5 (fifth frequency)**	9999	0 to 590 Hz, 9999	
109 G049	**V/F5 (fifth frequency voltage)**	0 V	0 to 1000 V	

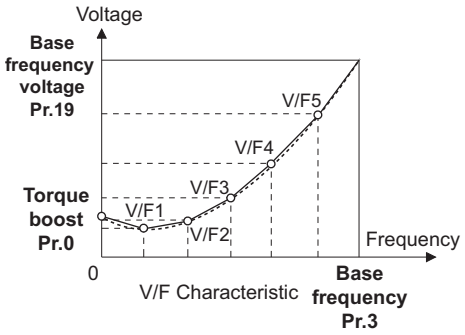

- By setting the **V/F1 (first frequency voltage/first frequency) to V/F5** parameters in advance, a desired V/F characteristic can be obtained.
- For an example, with the equipment with large static friction factor and small dynamic friction factor, large torque is required only at the start up, so a V/F pattern that will raise the voltage only at the low-speed range is set.
- Setting procedure
  1) Set the rated motor voltage in **Pr.19 Base frequency voltage**. (No function at the setting of "9999" or "8888".)
  2) Set **Pr.71 Applied motor** = "2" (adjustable 5 points V/F).
  3) Set frequency and voltage to be set in **Pr.100 to Pr.109**.

Caution

- **Make sure to set this parameter correctly according to the motor used. Incorrect setting may cause the motor to overheat and burn.**

NOTE

- Adjustable 5 points V/F will become enabled at the time of V/F control.
- At the time of **Pr.19 Base frequency voltage** = "8888, 9999", setting of **Pr.71** = "2" cannot be made. When setting **Pr.71** = "2", set the rated motor voltage in **Pr.19**.
- Read only error (Er- 1) is generated when the frequency value for each point is same.
- Set each point for **Pr.100 to Pr.109** (frequency, voltage) within the range of **Pr.3 Base frequency and Pr.19 Base frequency voltage**.
- When **Pr.71** = "2", **Pr.47 Second V/F (base frequency)** will not function.
- When **Pr.71** = "2", electronic thermal O/L relay will make calculations assuming a standard motor.
- By simultaneously using **Pr.60 Energy saving control selection** and the adjustable 5 points V/F, further energy saving effect is expected.
- The **Pr.0 Torque boost** and **Pr.12 DC injection brake operation voltage** settings are automatically changed according to the **Pr.71** setting. (Refer to page 340)

Parameters referred to
Pr.0 Torque boost page 496
Pr.3 Base frequency, Pr.19 Base frequency voltage page 497
Pr.12 DC injection brake operation voltage page 502
Pr.47 Second V/F (base frequency) page 501
Pr.60 Energy saving control selection page 500
Pr.71 Applied motor, Pr.450 Second applied motor page 337

5.13.6 SF-PR slip amount adjustment mode V/F

- As compared to our conventional SF-JR motor, the slip amount is small for the high-performance energy-saving SF-PR motor. When replacing the SF-JR to the SF-PR, the slip amount is reduced and the rotations per minute increases. Therefore, when the SF-PR is used with the same frequency setting as that of the SF-JR, power consumption may increase as compared to the SF-JR.
- By setting the slip amount adjustment mode, the frequency command can be adjusted to keep the rotations per minute of the SF-PR equivalent to those of the SF-JR for power consumption reduction.

Pr.	Name	Initial value	Setting range	Description
673 G060	SF-PR slip amount adjustment operation selection	9999	2, 4, 6	Set the number of SF-PR motor poles.
			9999	Slip amount adjustment mode invalid
674 G061	SF-PR slip amount adjustment gain	100%	0 to 500%	Setting is available for fine adjustment of the slip amount.

- By setting the number of SF-PR motor poles in **Pr.673 SF-PR slip amount adjustment operation selection**, the SF-PR slip amount adjustment mode is activated.
- The SF-PR slip amount adjustment mode is available only under V/F control.
- Use **Pr.674 SF-PR slip amount adjustment gain** to fine-tune the rotations per minute. To reduce the rotations per minute (to increase the compensation frequency), set a larger value in **Pr.674**. To increase the rotations per minute (to reduce the compensation frequency), set a smaller value in **Pr.674**.

NOTE

- The slip amount adjustment mode is not available in the following cases.
  During acceleration/deceleration, during DC injection brake operation, during PID control, during stall prevention operation, during regeneration avoidance operation, during traverse operation, and while the slip compensation is valid (**Pr.245**).

5.13.7 DC injection brake

- Timing to stop or braking torque can be adjusted by applying DC injection brake at the time of stopping motor.
  By the DC injection brake operation, the DC voltage is applied to the motor to prevent rotation of the motor shaft. The motor shaft will not return to its original position when it is rotated due to external force.

Pr.	Name	Initial value	Setting range	Description
10 G100	DC injection brake operation frequency	3 Hz	0 to 120 Hz	Set the operation frequency for the DC injection brake.
			9999	Operate at **Pr.13** or lower
11 G101	DC injection brake operation time	0.5 s	0	Without DC injection brake
			0.1 to 10 s	Set the operation time for the DC injection brake.
			8888	Operate with X13 signal ON
12 G110	DC injection brake operation voltage	4%*1	0 to 30%	Set the DC injection brake voltage (torque). When set to "0", there will be without DC injection brake.
		2%*2		
		1%*3		

*1 Initial value for the FR-F820-00340(7.5K) or lower and FR-F840-00170(7.5K) or lower.
*2 Initial values for the FR-F820-00490(11K) to FR-F820-02330(55K), FR-F840-00250(11K) to FR-F840-01160(55K).
*3 Initial value for the FR-F820-03160(75K) or higher and FR-F840-01800(75K) or higher.

◆Setting of operating frequency (Pr.10)

- By setting the frequency to operate the DC injection brake to **Pr.10 DC injection brake operation frequency**, the DC injection brake will operate when it reaches this frequency at the time of deceleration.
- When **Pr.10** = "9999", DC injection brake will start when the frequency reaches **Pr.13 Starting frequency**.
- The DC injection brake operation frequency depends on the stopping method.

Stopping method	Parameter setting	DC injection brake operation frequency
Press the STOP key on the operation panel Turning OFF of the STF/STR signal	0.5 Hz or higher in **Pr.10**	**Pr.10** setting
	Lower than 0.5 Hz in **Pr.10**, and 0.5 Hz or higher in **Pr.13**	0.5 Hz
	Lower than 0.5 Hz in both **Pr.10** and **Pr.13**	**Pr.10** or **Pr.13** setting, whichever larger
Set the frequency to 0 Hz	—	**Pr.13** setting or 0.5 Hz, whichever larger

- DC injection brake operation frequency will be fixed to 0 Hz at the time of PM motor control.

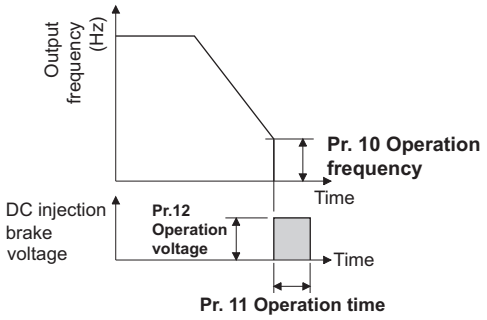

◆Setting of operation time (X13 signal, Pr.11)

- Set the time applying the DC injection brake to **Pr.11 DC injection brake operation time**.
- When the motor does not stop due to large load moment (J), increasing the setting produces an effect.
- When **Pr.11** = "0 s", DC injection brake will not operate. (The motor will coast to stop.)
- When **Pr.11** = "8888", DC injection brake will operate when the X13 signal is turned ON. DC injection brake will operate when the X13 signal is turned ON even while operating.
- For the X13 signal input, set "13" in any of **Pr.178 to Pr.189** to assign the function.

When **Pr. 11** = "8888"

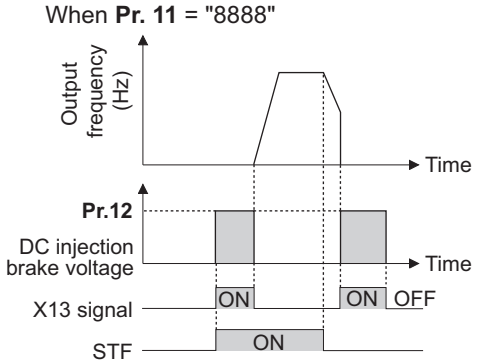

NOTE

- The X13 signal is disabled during PM motor control.

◆Setting of operation voltage (torque) (Pr.12)

- **Pr.12 DC injection brake operation voltage** will set the percent against the power supply voltage.
- DC injection brake will not operate with setting of **Pr.12** = "0%". (The motor will coast to stop.)

NOTE

- When the initial value is set in **Pr.12**, the setting corresponding to the motor is set according to the **Pr.71 Applied motor** setting. (Refer to page 340)
  However, when an energy saving motor (SF-HR or SF-HRCA) is used, change the **Pr.12** setting as shown below.

Inverter	Pr.12 setting
FR-F820-00167(3.7K) or lower FR-F840-00083(3.7K) or lower	4%
FR-F820-00250(5.5K), FR-F820-00340(7.5K) FR-F840-00126(5.5K), FR-F840-00170(7.5K)	3%
FR-F820-00490(11K) to FR-F820-00930(22K), FR-F820-01540(37K) or higher FR-F840-00250(11K) to FR-F840-00470(22K), FR-F840-00770(37K) or higher	2%
FR-F820-01250(30K) FR-F840-00620(30K)	1.5%

- Even if the setting value of **Pr.12** is made larger, braking torque will be limited so the output current will be within the rated current of the inverter.

Caution

- **Install a mechanical brake to make an emergency stop or to stay stopped for a long time.**

Parameters referred to

Pr.13 Starting frequency page 197, page 198
Pr.71 Applied motor page 337
Pr.80 Motor capacity page 341
Pr.178 to Pr.182 (input terminal function selection) page 329

5.13.8 Output stop function

The motor coasts to a stop (inverter output shutoff) when inverter output frequency falls to **Pr. 522** setting or lower.

Pr.	Name	Initial value	Setting range	Description
522 **G105**	**Output stop frequency**	9999	0 to 590 Hz	Set the frequency to start coasting to a stop (output shutoff).
			9999	No function

- When both of the frequency setting signal and output frequency falls to the frequency set in **Pr. 522** or lower, the inverter stops the output and the motor coasts to a stop.
- At a stop condition, the motor starts running when the frequency setting signal exceeds **Pr.522** + 2 Hz. The motor is accelerated at the **Pr.13 Starting frequency** (0.01 Hz under PM motor control) at the start.

Example of when target frequency>**Pr.522**+2Hz, and start signal is ON/OFF

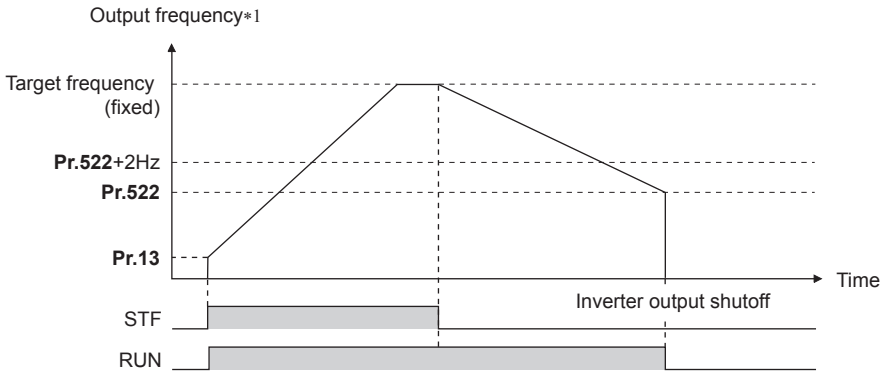

*1 The output frequency before the slip compensation is compared with the **Pr.522** setting.

NOTE

- When the output stop function is valid (**Pr.522** ≠ "9999"), the DC injunction brake becomes invalid and the motor coasts to stop when the output frequency drops to the **Pr.522** setting or lower.

Example of: target frequency = analog input command, start signal always ON

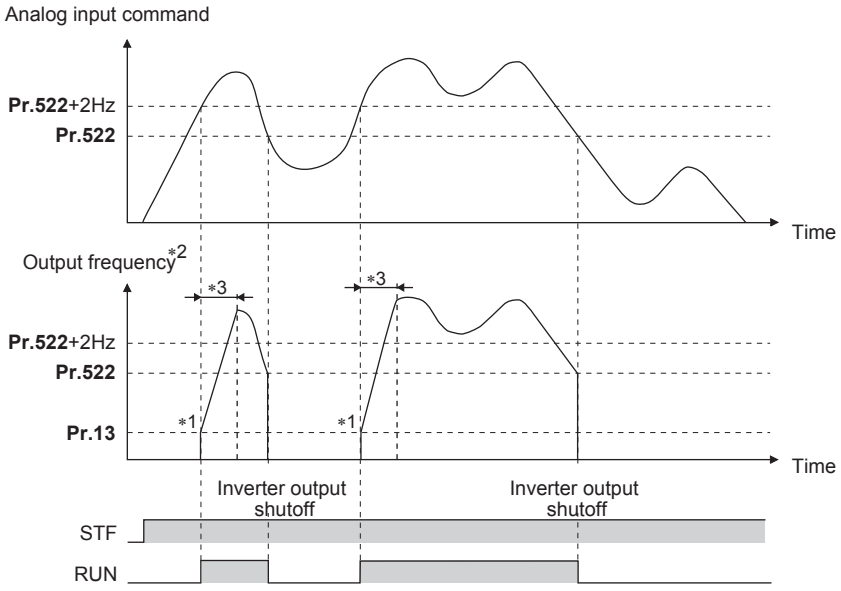

*1 At a stop condition, the motor is accelerated at the **Pr.13 Starting frequency** (0.01 Hz under PM motor control).

*2 The output frequency to be compared with the **Pr.522** setting is the output frequency before slip compensation (V/F control and Advanced magnetic flux vector control), or the speed command value converted into the frequency (PM motor control).

*3 Steepness of the slope depends on the acceleration/deceleration time settings such as **Pr.7**.

NOTE

- Motor coasts when the command value drops to **Pr.522** or lower while the start signal is ON. If the command value exceeds **Pr.522**+2 Hz again while coasting, the motor starts running at **Pr.13 Starting frequency** (0.01 Hz under PM motor control). When the motor re-accelerates after coasting, the inverter may trip in some parameter settings. (Activation of the restart function is recommended especially for an PM motor.)
- The output stop frequency function is disabled during PID control, JOG operation, power failure stop, traverse function operation, or offline auto tuning.
- Output stop function does not operate during reverse rotation deceleration. However, when the frequency setting signal and output frequency falls to **Pr.522** or lower, the inverter coasts to a stop.
- During the output stop due to the output stop function (when forward/reverse command is given, but frequency command is not given), FWD/REV LED indication on the operation panel flickers fast.

Caution

- **A PM motor is a motor with interior permanent magnets. High voltage is generated at motor terminals while the motor is running. Do not touch motor terminals and other parts until the motor stops to prevent an electric shock.**

Parameters referred to

Pr.10 DC injection brake operation frequency, Pr.11 DC injection brake operation time, Pr.12 DC injection brake operation voltage ☞page 502
Pr.13 Starting frequency ☞page 197, page 198

5.13.9 Stop selection

Select the stopping method (deceleration to stop or casting) at turn-OFF of the start signal.
Use this function to stop a motor with a mechanical brake at turn-OFF of the start signal.
Selection of start signal (STF/STR) operation can also be selected. (For start signal selection, refer to page 335.)

Pr.	Name	Initial value	Setting range	Description	
				Start signal (STF/STR) (Refer to page 335.)	Stop operation
250 G106	Stop selection	9999	0 to 100 s	STF signal: Forward rotation start STR signal: Reverse rotation start	It will coast to stop after set time when the start signal is turned OFF.
			1000 s to 1100 s	STF signal: Start signal STR signal: Forward/reverse rotation signal	It will coast to stop after (**Pr.250** - 1000) s when the start signal is turned OFF.
			9999	STF signal: Forward rotation start STR signal: Reverse rotation start	It will perform deceleration stop when the start signal is turned OFF.
			8888	STF signal: Start signal STR signal: Forward/reverse rotation signal	

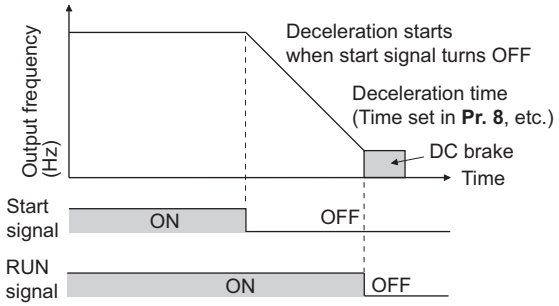

◆Make the motor perform deceleration stop

- Set **Pr.250** = "9999 (initial value) or 8888".
- It will perform deceleration stop when the start signal (STF/STR) is turned OFF.

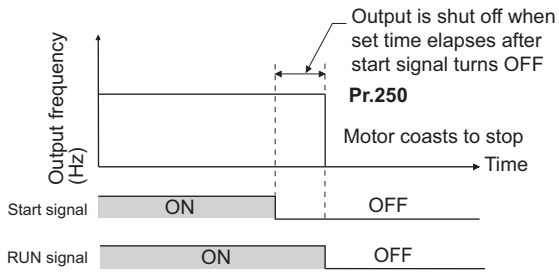

◆Make the motor perform coast to stop

- Set the time from the time the start signal is turned OFF to when the output is shutoff in **Pr.250**. When set to "1000 to 1100", output is shutoff after (**Pr.250** - 1000) s.
- The output is shutoff after the set time of **Pr.250** has elapsed after the start signal is turned OFF. The motor will coast to stop.
- The RUN signal will be turned OFF at the time of output stop.

NOTE

- Stop selection is disabled when following functions are operating.
  - Power failure stop function (**Pr.261**)
  - PU stop (**Pr.75**)
  - Deceleration stop due to communication error (**Pr.502**)
  - Offline auto tuning (with motor rotation)
- When **Pr.250** ≠ "9999 or 8888", acceleration/deceleration is performed in accordance to the frequency command until the output is shutoff by turning OFF the start signal.
- When the restart signal is turned ON during the motor coasting, the operation is resumed from **Pr.13 Starting frequency**.

Parameters referred to

Pr.7 Acceleration time, Pr.8 Deceleration time page 187
Pr.13 Starting frequency page 197, page 198
Pr.75 Reset selection/disconnected PU detection/PU stop selection page 162
Pr.261 Power failure stop selection page 426
Pr.502 Stop mode selection at communication error page 446

5.13.10 Regenerative brake selection and DC feeding mode

- When performing frequent start and stop operation, usage rate of the regenerative brake can be increased by using the optional high-duty brake resistor (FR-ABR) or the brake unit (FR-BU2, BU, FR-BU).
- When using continuously in regenerative condition, use the power regeneration common converter (FR-CV) or power regeneration converter (MT-RC). The high power factor converter (FR-HC2) can be used also to reduce harmonics, improve power factor, and operate continuously in the regenerative status.
- It is possible to choose between the DC feeding mode 1, which will operate with DC power supply (terminals P and N), and DC feeding mode 2, which will normally operate in AC power supply (terminals R, S, and T) and operate in DC power supply (terminal P and N), such as batteries, at the time of power failure.
- While the power is supplied only to the control circuit, the reset operation when the power is supplied to the main circuit can be selected.

Pr.	Name	Initial value	Setting range	Description
30 **E300**	**Regenerative function selection**	0*1 10*2	0 to 2, 10, 11, 20, 21, 100 to 102, 110, 111, 120, 121*1	First digit: Regeneration unit selection ("0" for FR-BU2 (GZG/GRZG/FR-BR), "1" for FR-BU2 (MT-BR5), "2" for FR-HC2 or FR-CV) Second digit: Selection of the power supply terminal to the inverter ("0" for AC, "1" for DC, "2" for AC and DC) Third digit: Reset when the power is supplied to the main circuit ("0" for reset, "1" for no reset) For details, refer to the table below.
			2, 10, 11, 102, 110, 111*2	
599 **T721**	**X10 terminal input selection**	0*1 1*2	0	Normally open input
			1	Normally closed input (NC contact input specification)

*1 The initial value or setting range for the standard model

*2 The initial value or setting range for the separated converter type.

◆Details of the setting value

- FR-F820-02330(55K) or lower, FR-F840-01160(55K) or lower

Regeneration unit	Power supply terminals of inverter	Pr.30 Setting*1
Brake unit (FR-BU2 (GZG/GRZG/FR-BR), FR-BU, BU)	R, S, T	0 (initial value), 100
	P, N	10, 110
	R, S, T/P, N	20, 120
High power factor converter (FR-HC2), Power regeneration common converter (FR-CV)	P, N	2, 102
For manufacturer setting. Do not set.		1, 11, 21, 101, 111, 121

- FR-F820-03160(75K) or higher, FR-F840-01800(75K) or higher

Regeneration unit	Power supply terminals of inverter	Pr.30 Setting*1
Without regenerative function	R, S, T	0 (initial value), 100
	P, N	10, 110
	R, S, T/P, N	20, 120
Brake unit (FR-BU2 (MT-BR5))	R, S, T	1, 101
	P, N	11, 111
	R, S, T/P, N	21, 121
Power regeneration converter (MT-RC)	R, S, T	1, 101
High power factor converter (FR-HC2)	P, N	2, 102

- FR-F842-07700(355K) or higher

Regeneration unit	Pr.30 Setting*1
Without regenerative function (FR-CC2)	10 (initial value), 110
Brake unit (FR-CC2+FR-BU2 (MT-BR5))	11, 111
High power factor converter (FR-HC2)	2, 102

*1 While the power is supplied only to the control circuit with **Pr.30** = "100 or higher", the inverter reset is not performed when the power is supplied to the main circuit.

◆When using brake unit (FR-BU2, BU, FR-BU) (FR-F820-02330(55K) or lower, FR-F840-01160(55K) or lower)

- When using FR-BU2 in combination with GZG/GRZG/FR-BR, or using BU or FR-BU, set **Pr.30** = "0 (initial value), 10, 20, 100, 110, 120".

◆When using brake unit (FR-BU2) (FR-F820-03160(75K) or higher, FR-F840-01800(75K) or higher)

- To use FR-BU2 in combination with MT-BR5, set as follows.
- Set **Pr.30** = "1, 11, 21".
- Set the brake unit FR-BU2, **Pr.0 Brake mode selection** = "2".

NOTE

- When **Pr.30** = "1, 11, 21", oL (stall prevention (overvoltage)) does not operate.

◆When using power regeneration converter (MT-RC)

- Set **Pr.30** = "1, 11, 21".

◆When using the high power factor converter (FR-HC2), the power regeneration common converter (FR-CV), or the converter unit (FR-CC2)

- To use FR-HC2 or FR-CV, set **Pr.30**="2".
- When using FR-CC2, set **Pr.30**="10" (initial value of separated converter type).
- Assign the following signal to a contact input terminal using any of **Pr.178 to Pr.189 (input terminal function selection)**.
  - (a) Inverter run enable signal (X10): FR-HC2 connection, FR-CV connection, FR-CC2connection
    To have coordinated protection with FR-HC2, FR-CV or FR-CC2, shutoff the inverter output by the X10 signal.
    Input the RDY signal of the FR-HC2 (RDYB signal of FR-CV or RDA signal of FR-CC2).
  - (b) FR-HC2/FR-CC2 connection, instantaneous power failure detection signal (X11): FR-HC2 connection, FR-CC2 connection
    During the operation using RS-485 communication, with the remote output and analog remote output functions enabled, the X11 signal is used to store the status when the inverter is set to store the status before an instantaneous power failure.
    Input the IPF signal (instantaneous power failure detection signal) of the FR-HC2 or FR-CC2.
- For the terminal to be used for the X10 and X11 signal, set "10" (X10), "11" (X11) in **Pr.178 to Pr.189** and assign the function. (For separated converter types, the X10 signal is assigned to the terminal MRS in the initial setting.)

NOTE

- For details of brake unit, high power factor converter (FR-HC2), power regeneration common converter (FR-CV) connections, refer to **page 63 to 67**. Also, for details of each option, refer to instruction manual of each option.
- When changed to **Pr.30** = "2", inverter will reset, so "Err" is displayed on the operation panel.

◆Logic reversing of inverter run enable signal (X10 signal, Pr.599)

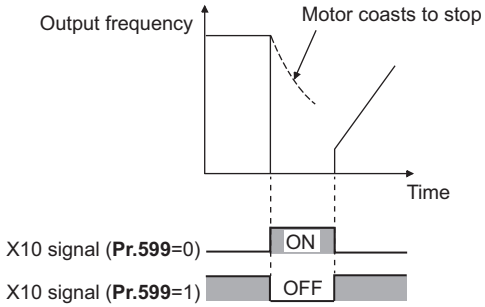

- Use **Pr.599 X10 terminal input selection** to select the X10 signal input specification between normally open (NO contact) and normally closed (NC contact). With the normally closed (NC contact) input specification, the inverter output is shut off by turning OFF (opening) the X10 signal.
- Changing the inverter logic (NO/NC contact) with the **Pr.599** setting is required according to the logic of the inverter operation enable signal sent from the option unit.
- The response time of the M10 signal is within 2 ms.

- Relationship between **Pr.599** and the inverter operation enable signal of each option unit

Pr.599 setting	Corresponding signals of the option units			Operation according to the X10 signal status
	FR-HC2	FR-CV	FR-CC2	
0 (Initial value of standard models)	RDY (negative logic) (initial setting)	RDYB	RDB	X10-ON: Inverter output shutoff (NO contact)
1 (Initial value of separated converter types)	RDY (positive logic)	RDYA	RDA	X10-OFF: Inverter output shutoff (NC contact)

NOTE

- If the X10 signal is unassigned while **Pr.30** = "2" (FR-HC2/FR-CV connection) or "10 or 11" (DC feeding mode 1), the MRS signal can be used as the X10 signal. At this time, logic setting for the signal will follow **Pr.17 MRS input selection**.
- MRS signal is enabled from any of the communication or external input, but when using the MRS signal as Inverter run enable signal (X10), it can be used as input from external.
- When FR-HC or MT-HC is connected, set **Pr.599** = "0 (initial value)".
- When the terminal assignment is changed with **Pr.178 to Pr.189 (input terminal function selection)**, wiring may be mistaken due to different terminal name and signal contents, or may affect other functions. Set parameters after confirming the function of each terminal.

◆Reset when the power is supplied to the main circuit (Pr.30 = "100, 101, 102, 110, 111, 120 or 121")

- While the power is supplied only to the control circuit (R1/L11, S1/L12 input or 24 V external power supply) with **Pr.30** = "100 or higher", the inverter reset is not performed when the power is supplied (R/L1, S/L2, T/L3 input) to the main circuit.
- When a communication option, etc. is used, communication interruption due to the inverter reset can be avoided.

NOTE

- When the power is supplied to the main circuit while the inverter protective function is activated, the inverter reset is performed even if it the setting is "No reset" at power ON.

◆DC feeding mode 1 (Pr.30 = "10, 11") (Standard models)

- For standard models, setting **Pr.30**="10 or 11" allows operation with a DC power supply.
- Do not connect anything to the AC power supply connecting terminals R/L1, S/L2, and T/L3, and connect the DC power supply to the terminals P/+ and N/-. Also, remove the jumpers between terminal R/L1 and R/L11as well as between S/L2 and S1/L21, and connect the terminals R1/L11 and S1/L21 to the terminals P/+ and N/-.
- Following is a connection example.

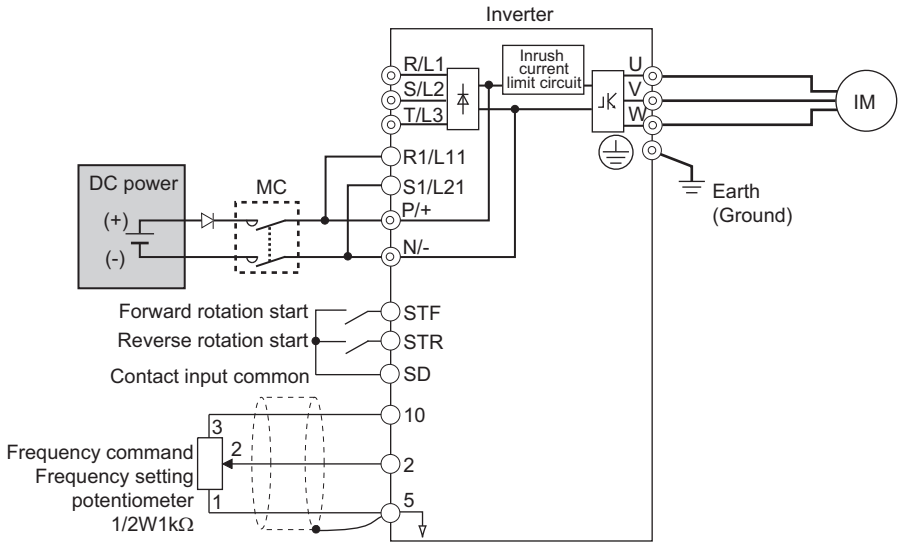

Caution

- **Do not connect a separated converter type inverter to a DC power supply. Doing so may damage the inverter.**

◆DC feeding mode 2 (Pr.30 = "20, 21") (Standard models)

- When **Pr.30** = "20, 21", it will normally operate with AC power supply and operate with DC power supply such as batteries at the time of power failure.
- Connect the AC power supply to the AC power supply connecting terminals R/L1, S/L2, and T/L3, and connect the DC power supply to the terminals P/+ and N/-. Also, remove the jumpers between terminal R/L1 and R/L11as well as between S/L2 and S1/L21, and connect the terminals R1/L11 and S1/L21 to the terminals P/+ and N/-.
- Operation with DC current is possible by turning ON the DC feeding operation permission signal (X70). For details on I/O signal, refer to following table.

Signal name		Name	Description	Parameter setting
Input	X70	DC feeding operation permission signal	To operate with DC feeding, turn ON the X70 signal. When the inverter output is shutoff due to power failure, it will be possible to start up 200 ms after turning ON the X70 signal. (Automatic restart after instantaneous power failure can start after the time set in **Pr.57** has elapsed.) When the X70 signal is turned OFF while operating the inverter, output shutoff (**Pr.261** = 0) or deceleration stop (**Pr.261** ≠ 0) will occur.	Set "70" to either of **Pr.178 to Pr.189**.
	X71	DC feeding cancel signal	Turn ON when stopping the DC feeding. When the X71 signal is turned ON during the operation of the inverter and X70 signal is ON, output shutoff (**Pr.261** = 0) or deceleration stop (**Pr.261** ≠ 0) will occur, and Y85 signal will turn OFF after stopping. After turning ON the X71 signal, operation is not possible even if the X70 signal is turned ON.	Set "71" to either of **Pr.178 to Pr.189**.
Output	Y85	DC feeding signal	This will turn ON during power failure or undervoltage of the AC power supply. It will turn OFF when the X71 signal turns ON or power restoration. The Y85 signal will not turn OFF even with the power restoration while the inverter is running, but turns OFF after stopping the inverter. When the Y85 signal is turned ON due to undervoltage, the Y85 signal will not turn OFF even when the undervoltage is resolved. The ON/OFF status is maintained when the inverter is reset.	Set "85 (positive logic) or 185 (negative logic)" to one of **Pr.190 to Pr.196**.

(G) Control parameters

- Following is the connection diagram of switching to DC power supply using the power failure detection of the inverter.

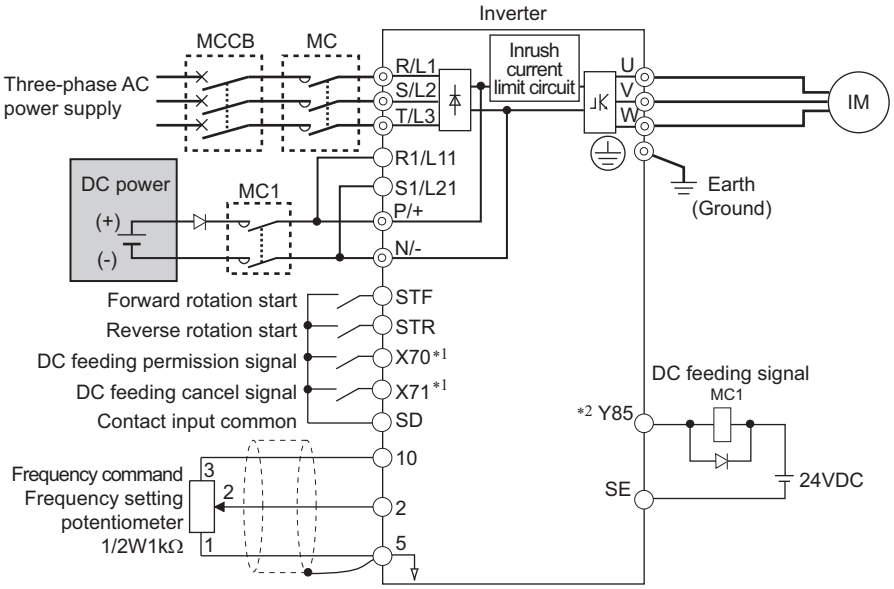

*1 Assign the function by setting **Pr.178 to Pr.189 (input terminal function selection)**.

*2 Assign the function by setting **Pr.190 to Pr.196 (output terminal function selection)**.

- Operation example at the time of power failure occurrence 1

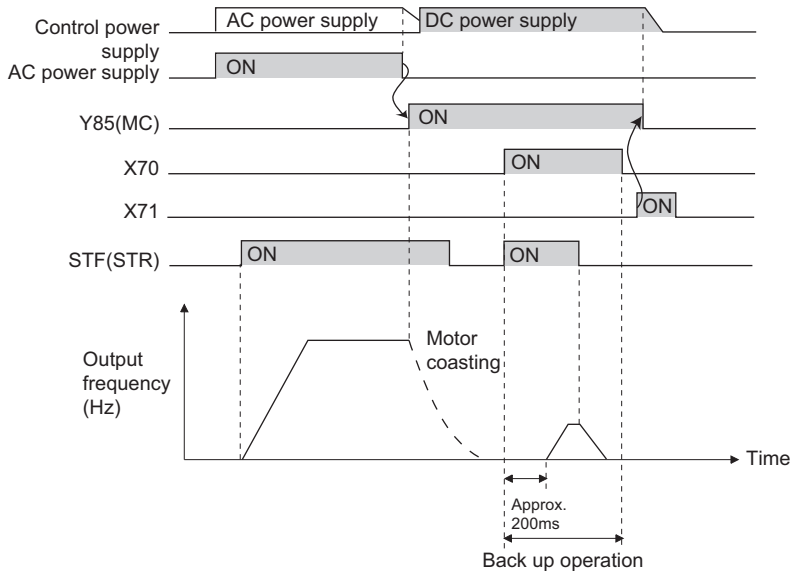

- Operation example at the time of power failure occurrence 2 (when the AC power supply is restored)

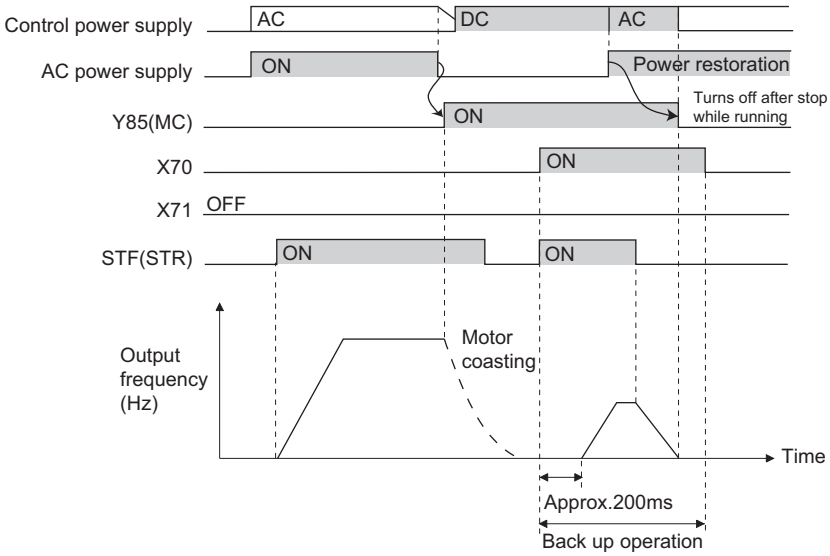

• Operation example at the time of power failure occurrence 3 (when continuing the operation)

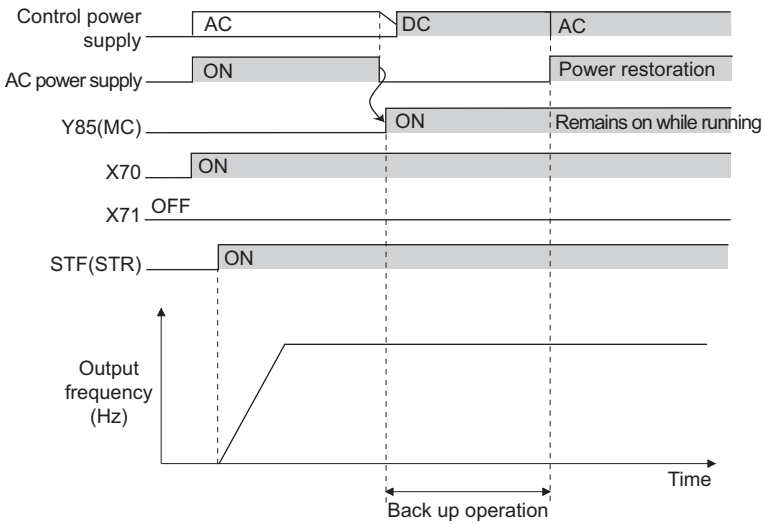

◆Power supply specification for DC feeding (Standard models)

200 V class	Rated input DC voltage	283 V DC to 339 V DC
	Permissible fluctuation	240 V DC to 373 V DC
400 V class	Rated input DC voltage	537 V DC to 679 V DC
	Permissible fluctuation	457 V DC to 740 V DC

NOTE

- The voltage between P and N will temporarily increase to 415 V (830 V) or higher during the regenerative driving, so take caution on the selection of the DC power supply.
- When an AC power supply is connected to the R/L1, S/L2, and T/L3 terminals during the DC feeding with **Pr.30** = "2, 10, 11" (DC feeding), an option fault (E.OPT) will occur.
- When set to **Pr.30** = "2, 10, 11, 20, 21" (DC feeding) and operated by DC feeding, detection of undervoltage (E.UVT) and instantaneous power failure (E.IPF) is not performed.
- When DC power is switched on, a larger inrush current flows than in AC power. The number of power-on times should be minimized.
- Changing the terminal assignment using **Pr.178 to Pr.189 (input terminal function selection) or Pr.190 to Pr.196 (output terminal function selection)** may affect the other functions. Set parameters after confirming the function of each terminal.

Parameters referred to

Pr.17 MRS input selection page 332
Pr.57 Restart coasting time page 414, page 420
Pr.178 to Pr.189 (input terminal function selection) page 329
Pr.190 to Pr.196 (output terminal function selection) page 288
Pr.261 Power failure stop selection page 426

5.13.11 Regeneration avoidance function

The regenerative status can be avoided by detecting the regenerative status and raising the frequency.

- Continuous operation is possible by increasing the frequency automatically so it will not go into regenerative operation even when the fan is turned forcefully by other fans in the same duct.

Pr.	Name	Initial value		Setting range	Description
882 G120	**Regeneration avoidance operation selection**	0		0	Disables regeneration avoidance function
				1	Constantly enables regeneration avoidance function
				2	Enables regeneration avoidance function only during constant-speed operation
883 G121	**Regeneration avoidance operation level**	200 V Class	380 VDC	300 to 800 V	Set the bus voltage level to operate the regeneration avoidance operation. When the bus voltage level is set low, it will be harder to generate overvoltage error, but actual deceleration time will be longer. Set the setting value higher than power supply voltage × $\sqrt{2}$.
		400 V Class	760 VDC		
884 G122	**Regeneration avoidance at deceleration detection sensitivity**	0		0	Disables regeneration avoidance due to bus voltage change rate
				1 to 5	Set the sensitivity to detect the bus voltage change rate Setting value 1 → 5 Detection sensitivity Low → High
885 G123	**Regeneration avoidance compensation frequency limit value**	6 Hz		0 to 590 Hz	Set the limit value for frequency to rise when the regeneration avoidance function operates.
				9999	Disables frequency limit
886 G124	**Regeneration avoidance voltage gain**	100%		0 to 200%	Adjust the response at the time of regeneration avoidance operation. When the setting value is set larger, response against the bus voltage change will improve, but the output frequency may become unstable. When the vibration cannot be stabilized even if the setting value of **Pr.886** is made smaller, set the setting value of **Pr.665** smaller.
665 G125	**Regeneration avoidance frequency gain**	100%		0 to 200%	

◆What is regeneration avoidance operation? (Pr.882, Pr.883)

- When the regenerative status is large, DC bus voltage will rise, which may cause overvoltage alarm (E.OV[]). Regenerative status can be avoided by detecting this rise of bus voltage, and raising the frequency when the bus voltage level exceeds **Pr.883 Regeneration avoidance operation level**.
- The regeneration avoidance operation can be selected to operate constantly or operate only during constant speed.
- The regeneration avoidance function is enabled by setting to **Pr.882 Regeneration avoidance operation selection** = "1, 2".

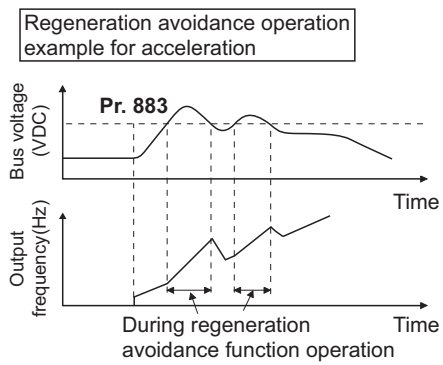

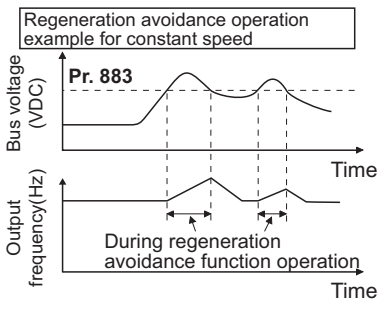

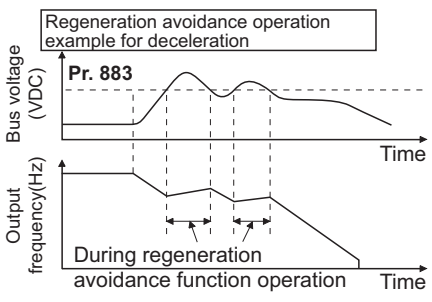

NOTE

- The slope of frequency rising or lowering by the regeneration avoidance operation will change depending on the regenerative status.
- The DC bus voltage of the inverter will be approximately $\sqrt{2}$ times of the normal input voltage. The bus voltage will be approximately 311 V (622 V) DC in case of input voltage of 220 V (440 V) AC. However, it may vary depending on the input power supply waveform.
- Make sure that the setting value of **Pr.883** will not get under DC bus voltage level. The frequency will rise with operation of the regeneration avoidance function even at the time of no regenerative status.
- The stall prevention (overvoltage) (oL) will only operate during deceleration, stopping the lowering of output frequency, but on the other hand, the regeneration avoidance function will constantly operate (**Pr.882** = "1") or operate only at constant speed (**Pr.882** = "2"), and raise the frequency depending on the amount of regeneration.
- When the motor becomes unstable due to operation of the stall prevention (overcurrent) (OL) during the regeneration avoidance operation, increase the deceleration time or lower the setting of **Pr.883**.

◆To detect the regenerative status during deceleration faster (Pr.884)

- Since a rapid change in bus voltage cannot be handled by bus voltage level detection during the regeneration avoidance operation, deceleration is stopped by detecting the change in bus voltage and if it is equal or lower than **Pr.883 Regeneration avoidance operation level**.
  Set the detectable bus voltage change rate as the detection sensitivity in **Pr.884 Regeneration avoidance at deceleration detection sensitivity** . A larger set value increases the detection sensitivity.

NOTE

- When the setting value is too small (detection sensitivity is not good), detection will not be possible, and regeneration avoidance will operate even with the bus voltage change caused by a change in the input power.

◆Limit regeneration avoidance operation frequency (Pr.885)

- It is possible to assign a limit to the output frequency corrected (rise) by the regeneration avoidance operation.
- Limit of the frequency is output frequency (frequency before regeneration avoidance operation) + **Pr.885 Regeneration avoidance compensation frequency limit value** for during acceleration and constant speed.
  During deceleration, when the frequency increases due to the regeneration avoidance operation and exceeds the limit value, the limit value will be retained until the output frequency is reduced to be the half the **Pr.885** setting.
- When the frequency that have increased by the regeneration avoidance operation exceeds **Pr.1 Maximum frequency**, it will be limited to the maximum frequency.
- By setting to **Pr.885** = "9999", regeneration avoidance operation frequency limitation is disabled.
- Set using the motor rated slip frequency as a guideline. Raise the setting value if the overvoltage protection function (E.OV[]) operation at the start of deceleration.

$$\text{Rated motor slip frequency} = \frac{\text{Synchronized speed at the time of base frequency} - \text{rated rotation speed}}{\text{Synchronized speed at the time of base frequency}} \times \text{Rated motor frequency}$$

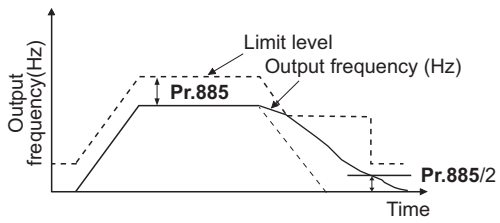

◆Adjustment of regeneration avoidance operation (Pr.665, Pr.886)

- When the frequency becomes unstable at the time of regeneration avoidance operation, set the setting value for **Pr.886 Regeneration avoidance voltage gain** smaller. On the other hand, if an overvoltage fault occurs due to a sudden regeneration, increase the setting.
- When the vibration cannot be stabilized even if the setting value of **Pr.886** is made smaller, set the setting value of **Pr.665 Regeneration avoidance frequency gain** smaller.

NOTE

- During the regeneration avoidance operation, the stall prevention (overvoltage) (oL) is displayed and the overload alarm (OL) signal is output. The operation when the OL signal is output can be set with **Pr.156 Stall prevention operation selection**. The OL signal output timing can be set with **Pr.157 OL signal output timer**.
- The stall prevention is enabled even at the time of regeneration avoidance operation.
- The regeneration avoidance function cannot decrease the actual deceleration time for the motor to stop. The actual deceleration time is determined by the regenerative power consumption performance, so to decrease the deceleration time, consider using a regeneration unit (FR-BU2, BU, FR-BU, FR-CV, FR-HC2).
- When using regeneration unit (FR-BU2, BU, FR-BU, FR-CV, FR-HC2) to consume the regenerative power, set to **Pr.882** = "0 (initial value)" (disables regeneration avoidance function). When consuming the regenerative power at the time of deceleration with the regeneration unit, etc., set to **Pr.882** = "2" (enables regeneration avoidance function only at the time of constant speed).

Parameters referred to

Pr.1 Maximum frequency page 245
Pr.8 Deceleration time page 187
Pr.22 Stall prevention operation level page 248

5.13.12 Increased magnetic excitation deceleration

V/F Magnetic flux

Increase the loss in the motor by increasing the magnetic flux at the time of deceleration. Deceleration time can be reduced by suppressing the stall prevention (overvoltage) (oL).
It will make possible to reduce the deceleration time without a brake resistor.

Pr.	Name	Initial value	Setting range	Description
660 G130	**Increased magnetic excitation deceleration operation selection**	0	0	Without increased magnetic excitation deceleration
			1	With increased magnetic excitation deceleration
661 G131	**Magnetic excitation increase rate**	9999	0 to 40%	Set the increase of excitation.
			9999	Magnetic excitation increase rate 10%
662 G132	**Increased magnetic excitation current level**	100%	0 to 300%	The increased magnetic excitation rate is automatically lowered when the output current exceeds the setting value at the time of increased magnetic excitation deceleration.

◆Setting of increased magnetic excitation rate (Pr.660, Pr.661)

- To enable the increased magnetic excitation deceleration, set **Pr.660 Increased magnetic excitation deceleration operation selection** = "1".
- Set the amount of excitation increase in **Pr.661 Magnetic excitation increase rate**. Increased magnetic excitation deceleration will be disabled when **Pr.661** = "0".
- When the DC bus voltage exceeds the increased magnetic excitation deceleration operation level during the deceleration, excitation is increased in accordance with the setting value in **Pr.661**.
- The increased magnetic excitation deceleration will continue even if the DC bus voltage goes under the increased magnetic excitation deceleration operation level during increased magnetic excitation deceleration.

Inverter	Increased magnetic excitation deceleration operation level
200 V class	340 V
400 V class	680 V
With 500 V input	740 V

- When the stall prevention (overvoltage) occurs during the increased magnetic excitation deceleration operation, increase the deceleration time or raise the setting value of **Pr.661**. When the stall prevention (overcurrent) occurs, increase the deceleration time or lower the setting value of **Pr.661**.
- Increased magnetic excitation deceleration is enabled with V/F control, Advanced magnetic flux vector control.

NOTE

- The increased magnetic excitation deceleration will be disabled in the following conditions:
  During PM motor control, power failure stop, operation with FR-HC2/FR-CV, energy saving operation, Optimum excitation control.

◆Overcurrent prevention function (Pr.662)

- The overcurrent prevention function is valid under V/F control and Advanced magnetic flux vector control.
- Increased magnetic excitation rate is lowered automatically when the output current exceeds **Pr.662** at the time of increased magnetic excitation deceleration.
- When the inverter protective function (E.OC[], E.THT) operates due to increased magnetic excitation deceleration, adjust with **Pr.662**.
- Overcurrent preventive function will be disabled when **Pr.662**= "0".

NOTE

- When set to **Pr.662** > **Pr.22 Stall prevention operation level**, overcurrent preventive function will operate at the setting value of **Pr.22**. (Operates at **Pr.622** when **Pr.22** = "0")

Parameters referred to

Pr.22 Stall prevention operation level page 248
Pr.30 Regenerative function selection page 508
Pr.60 Energy saving control selection page 500
Pr.162 Automatic restart after instantaneous power failure selection page 414, page 420
Pr.261 Power failure stop selection page 426

5.13.13 Slip compensation V/F

Slip of the motor is estimated from the inverter output current at the time of V/F control, and maintain the rotation of the motor constant.

Pr.	Name	Initial value	Setting range	Description
245 G203	**Rated slip**	9999	0.01 to 50%	Set the rated motor slip.
			0, 9999	Without slip compensation
246 G204	**Slip compensation time constant**	0.5s	0.01 to 10s	Set the response time of the slip compensation. Response will become faster when the value is lowered, but the regenerative overvoltage (E.OV[]) error will occur more frequently when the load inertia is larger.
247 G205	**Constant-power range slip compensation selection**	9999	0	Do not perform slip compensation at constant output range (frequency range higher than the frequency set in **Pr.3**).
			9999	Perform the slip compensation of the constant output range.

- Slip compensation will become enabled by calculating the rated motor slip, and setting to **Pr.245**.
  Slip compensation is not performed when **Pr.245** = "0, 9999".

$$\text{Rated slip} = \frac{\text{Synchronized speed at the time of base frequency - rated rotation speed}}{\text{Synchronized speed at the time of base frequency}} \times 100[\%]$$

NOTE

- When the slip compensation is performed, the output frequency may become larger than the set frequency. Set **Pr.1 Maximum frequency** higher than the set frequency.
- Slip compensation will be disabled in following cases.
  At the times of stall preventive (oL, OL) operation, regeneration avoidance operation, auto tuning

Parameters referred to

Pr.1 Maximum frequency page 245
Pr.3 Base frequency page 497

5.13.14 Speed smoothing control V/F Magnetic flux

There are times where the vibration due to mechanical resonance affect the inverter, making the output current (torque) unstable. In such case, vibration can be decreased by reducing the deviation in the output current (torque) by changing the output frequency.

Pr.	Name	Initial value	Setting range	Description
653 G410	**Speed smoothing control**	0%	0 to 200%	Confirm the effect by raising and lowering the value with 100% as a reference.
654 G411	**Speed smoothing cutoff frequency**	20 Hz	0 to 120 Hz	Set the lower limit of the torque deviation cycle (frequency).

◆Control block diagram

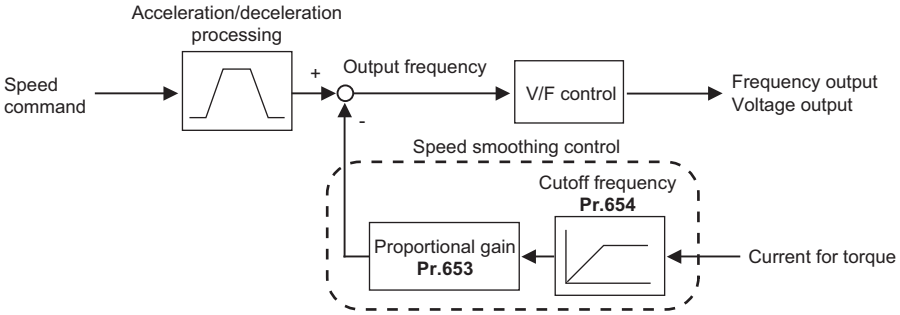

◆Setting method

- When vibration caused by mechanical resonance occurs, set **Pr.653 Speed smoothing control** to 100%, and operate at the operation frequency with largest vibration, and confirm if the vibration is suppressed after few seconds.
- If there is no effect, gradually raise the setting value of **Pr.653**, perform the operation and confirmation of the effect repeatedly, and use the value (**Pr.653**) with most effect as the final setting value.
- If the vibration gets larger by raising **Pr.653**, lower the value of **Pr.653** under 100%, and perform the confirmation of result in a same manner.
- When the vibration frequency (frequency of torque deviation, speed deviation, or converter output voltage deviation) by the mechanical resonance with a measurement device, etc., set the frequency of 1/2 to 1 times the vibration frequency in **Pr.654 Speed smoothing cutoff frequency**. (Setting vibrational frequency range can suppress the vibration better.)

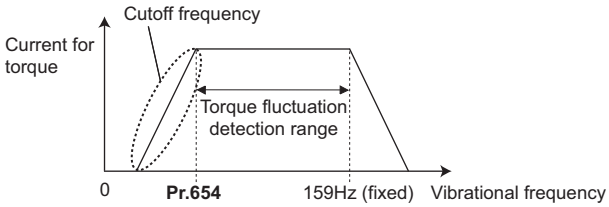

NOTE

- Depending on the equipment, the vibration may not be suppressed sufficiently or the effect is not obtained.

5.14 Parameter clear / all parameter clear

POINT

- Set "1" to **Pr.CLR Parameter clear**, **ALL.CL All parameter clear** to initialize all parameters. (Parameters cannot be cleared when **Pr.77 Parameter write selection** = "1".)
- Pr.CL does not clear calibration parameters or the terminal function selection parameters.
- Refer to the parameter list on page 597 for parameters cleared with this operation.

Operation

1. Screen at power-ON

The monitor display appears.

2. Changing the operation mode

Press PU EXT to choose the PU operation mode. [PU] indicator is lit.

3. Parameter setting mode

Press MODE to choose the parameter setting mode. (The parameter number read previously appears.)

4. Selecting the parameter number

To perform a parameter clear, turn ◎ to Pr.CLR, and to perform all parameter clear, turn it to ALLCL and press SET. "0" (initial value) appears.

5. Parameter clear

Turn ◎ to change the set value to " 1". Press SET to enter the setting. " 1" and "Pr.CLR" (ALLCL) flicker alternately after parameters are cleared.

- Turn ◎ to read another parameter.
- Press SET to show the setting again.
- Press SET twice to show the next parameter.

Setting	Description	
	Pr.CLR Parameter clear	ALL.CL All parameter clear
0	Initial display (Parameters are not cleared.)	
1	Returns parameters excluding **calibration parameters and terminal function selection parameters** to their initial values.	Returns all parameters which can be cleared including **calibration parameters and terminal function selection parameters** to their initial values.

NOTE

- 1 and Er4 are displayed alternately... Why?

  - The inverter is not in the PU operation mode.

  1) Press PU EXT.

  PU is lit, and " 1" appears on the monitor. (When **Pr.79** ="0" (initial value))

  2)Press SET to clear the parameter.

- Stop the inverter first. A writing error occurs if a parameter clear is attempted while the inverter is running.
  To perform a parameter clear, the inverter must be in the PU operation mode even if "2" is set to **Pr.77**.
- For availability of parameter clear and all parameter clear for each parameter, refer to the parameter list on page 597.

5.15 Copying and verifying parameters on the operation panel

Pr.CPY setting value	Description
0.---	Initial display
1.RD	Copy the source parameters to the operation panel.
2.WR	Write the parameters copied to the operation panel to the destination inverter.
3.VFY	Verify parameters in the inverter and operation panel. (Refer to page 523.)

NOTE

- When the destination inverter is other than the FR-F800 series or when parameter copy is attempted after the parameter copy reading was stopped, "model error (rE4)" appears.
- Refer to the parameter list on page 597 for the availability of parameter copy.
- When the power is turned OFF or an operation panel is disconnected, etc. during parameter copy writing, write again or check the setting values by parameter verification.
- When parameters are copied from a different-capacity inverter, there are parameters with different initial values depending on the inverter capacity, so the setting values of some parameters will be automatically changed. After performing a parameter copy from a different-capacity inverter, check all the parameter settings. (Refer to the parameter list (page 112) for details of parameters with different initial values depending on individual inverter capacity.)
- If parameters are copied from an older inverter to a newer inverter that has additional parameters, out-of-range setting values may be written in some parameters. In that case, those parameters operate as if they were set to their initial values.

5.15.1 Parameter copy

- Inverter parameter settings can be copied to other inverters.

◆Reading the parameter settings of the inverter to the operation panel

Operation

1. Connect the operation panel to the source inverter.
2. Parameter setting mode
   Press MODE to choose the parameter setting mode. (The parameter number read previously appears.)
3. Selecting the parameter number
   Turn the dial to PrCPY (parameter copy), and press SET.
   "0.---" appears.
4. Reading to operation panel
   Turn the dial to change the set value to "1Rd". Press SET to start reading of the inverter parameter settings by the operation panel. (It takes about 30 seconds to read all the settings. During reading, "1Rd" flickers.)
5. End reading
   "1Rd" and "PrCPY" flicker alternately after settings are read.

NOTE

- rE1 appears... Why?
  - Parameter read error. Perform the operation from step 3 again.

◆Copying parameter settings read to the operation panel to the inverter

Operation

1.	Connect the operation panel to the destination inverter.
2.	Parameter setting mode Press MODE to choose the parameter setting mode. (The parameter number read previously appears.)
3.	Selecting the parameter number Turn to "Pr.CPY" (parameter copy), and press SET. "0.---" appears.
4.	Selecting parameter copy Turn to change the setting value to "2WR" and press SET. "2. ALL" appears.
5.	Copying to the inverter Press SET to start copying to the inverter. (It takes about 60 seconds to copy all the settings. During copying, the selected parameter group flickers.) Perform this step while the inverter is stopped. (Parameter settings cannot be copied during operation.)
6.	Ending copying "2WR" and "Pr.CPY" flicker alternately after copying ends.
7.	When parameters are written to the destination inverter, reset the inverter before operation by, for example, turning the power supply OFF.

NOTE

- "rE2" appears... Why?
  - Parameter write error. Perform the operation from step 3 again.
- "CP" and "0.00" are displayed alternately.
  - Appears when parameter copy is performed between inverters FR-F820-02330(55K) or lower or inverters FR-F840-01160(55K) or lower and inverters FR-F820-03160(75K) or higher or FR-F840-01800(75K) or higher.
  - When CP and 0.00 flicker alternately, set the **Pr.989 Parameter copy alarm release** as shown below (initial value).

Pr.989 setting	Operation
10	Cancels the alarm of FR-F820-02330(55K) or lower and FR-F840-01160(55K) or lower.
100	Cancels the alarm of FR-F820-03160(75K) or higher and FR-F840-01800(75K) or higher.

  - After setting **Pr.989**, perform setting of **Pr.9, Pr.30, Pr.51, Pr.56, Pr.57, Pr.72, Pr.80, Pr.82, Pr.90 to Pr.94, Pr.453, Pr.455, Pr.458 to Pr.462, Pr.557, Pr.859, Pr.860, and Pr.893** again.

5.15.2 Parameter verification

- Whether the parameter settings of inverters are the same or not can be checked.

Operation

1.	Copy the parameter settings of the verification source inverter to operation panel according to the procedure on page 521.
2.	Move the operation panel to the inverter to be verified.
3.	Screen at power-ON The monitor display appears.
4.	Parameter setting mode Press MODE to choose the parameter setting mode. (The parameter number read previously appears.)
5.	Selecting the parameter number Turn to "Pr.CPY" (parameter copy) and press SET. "0.-- -- --" appears.
6.	Parameter verification Turn to change to setting value "3rFY" (parameter copy verification mode). Press SET. Verification of the parameter settings copied to the operation panel and the parameter settings of the verification destination inverter is started. (It takes about 60 seconds to verify all the settings. During verification, "3rFY" flickers.) ●If there are different parameters, the different parameter number and "rE3" flicker. ●To continue verification, press SET.
7.	"Pr.CPY" and "3rFY" flicker alternately after verification ends.

NOTE

- rE3 flickers... Why?
  - The set frequency may be incorrect. To continue verification, press SET.

5.16 Copying and verifying parameters using USB memory

- Inverter parameter settings can be copied to USB memory.
- Parameter setting data copied to USB memory can be copied to other inverters or verified to see if they differ from the parameter settings of other inverters.
- Parameter settings can also be imported to a personal computer and edited in FR Configurator 2.

◆Changes in USB memory copy operation states

- Insert the USB memory in the inverter. The USB memory mode is displayed and USB memory operations are possible.

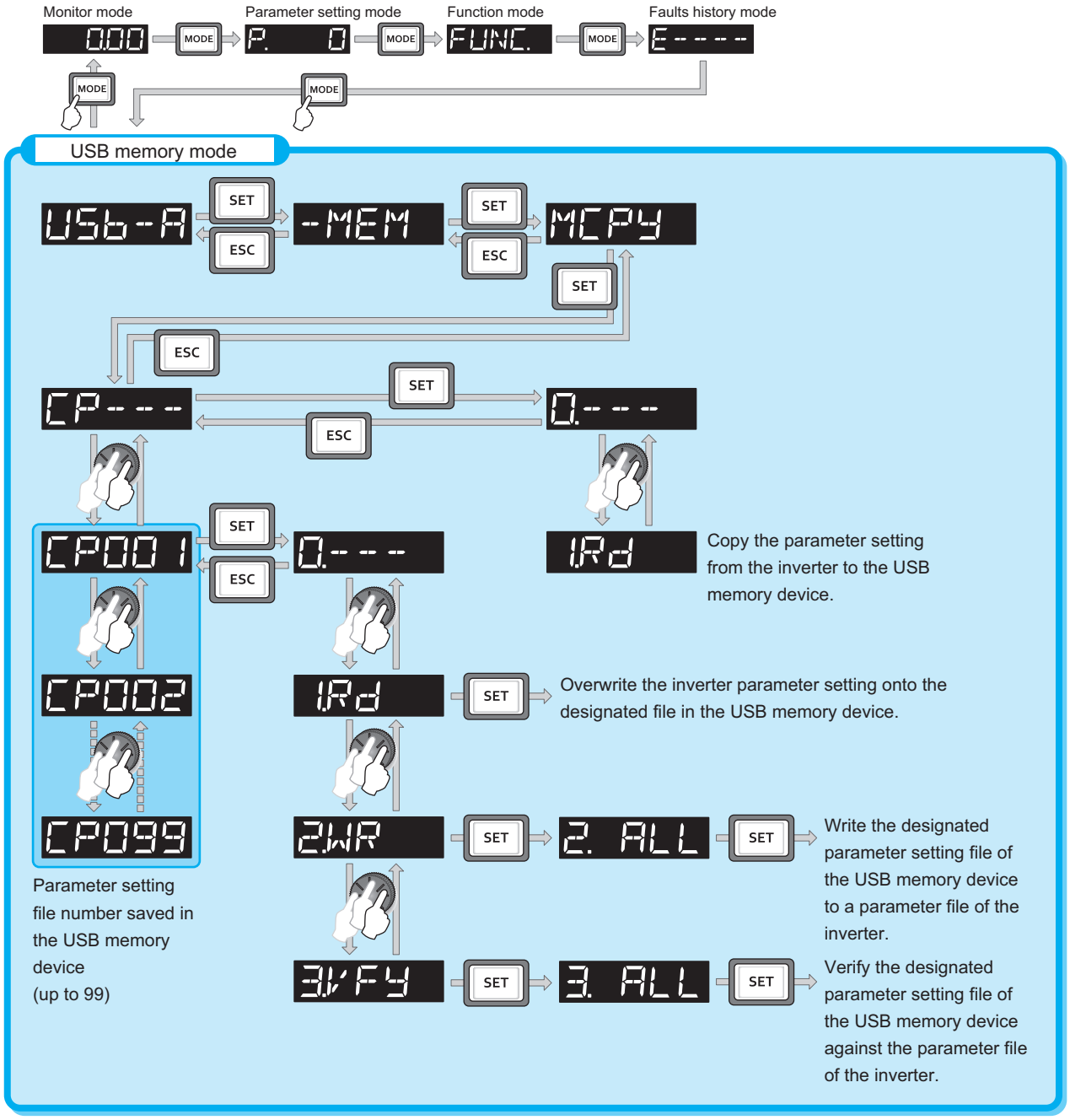

NOTE

- When parameter settings are copied to USB memory without specifying a parameter setting file number in USB memory, numbers are automatically assigned.
- Up to 99 files can be saved on USB memory. When the USB memory device already has 99 files, attempting copying of another file to the USB memory device causes the file quantity error (rE7).
- Refer to the FR Confirurator 2 instruction manual for details on importing files to FR Configurator 2.

◆Procedure for copying parameters to USB memory

	Operation
1.	Insert the USB memory into the copy source inverter.
2.	USB memory mode Press MODE to change to the USB memory mode.
3.	Displaying the file selection screen Press SET three times to display CP----- (file selection screen) and press SET. (To overwrite files on USB memory, display the file selection screen, turn to select the file number, and press SET.)
4.	Copying to USB memory Turn to change to "IRd". Press SET to copy the parameter settings at the copy source to USB memory. (It takes about 15 seconds to copy all the settings. During copying, "IRd" flickers.) "IRd" and "file number when the parameter file was copied to USB memory" flicker after copying ends.

◆Procedure for copying parameters from USB memory to inverter

	Operation
1.	Insert the USB memory into the destination inverter.
2.	USB memory mode Press MODE to change to the USB memory mode.
3.	Displaying the file selection screen Press SET three times to display CP----- (file selection screen).
4.	Selecting the file number Turn to select the file number to copy to the inverter, and press SET.
5.	Turn to display "2WR" and press SET. 2. ALL appears.
6.	Writing to the inverter Press SET to write the parameters copied to the USB memory to the destination inverter. (It takes about 15 seconds to copy all the settings. During copying, "2. ALL" flickers.) "2. ALL" and "copied file number" flicker after copying ends. ●Perform this step while the inverter is stopped.
7.	When parameters are written to the destination inverter, reset the inverter before operation by, for example, turning the power supply OFF.

NOTE

- rE 1, rE2 appears... Why?
  - A fault occurred on USB memory. Check the USB memory connection, then retry.
- CP and 0.00 are displayed alternately.
  - Appears when parameter copy is performed between inverters FR-F820-02330(55K) or lower or inverters FR-F840-01160(55K) or lower and inverters FR-F820-03160(75K) or higher or FR-F840-01800(75K) or higher.
  - When CP and 0.00 flicker alternately, set the **Pr.989 Parameter copy alarm release** as shown below (initial value).

Pr.989 setting	Operation
10	Cancels the alarm of FR-F820-02330(55K) or lower and FR-F840-01160(55K) or lower.
100	Cancels the alarm of FR-F820-03160(75K) or higher and FR-F840-01800(75K) or higher.

  - After setting **Pr.989**, perform setting of **Pr.9, Pr.30, Pr.51, Pr.56, Pr.57, Pr.72, Pr.80, Pr.82, Pr.90 to Pr.94, Pr.453, Pr.455, Pr.458 to Pr.462, Pr.557, Pr.859, Pr.860, and Pr.893** again.
- When the destination inverter is other than the FR-F800 series or when parameter copy is attempted after the parameter copy reading was stopped, "model error (rE4)" appears.
- Refer to the parameter list on page 597 for the availability of parameter copy.
- When the power is turned OFF or an operation panel is disconnected, etc. during parameter copy writing, write again or check the setting values by parameter verification.
- When parameters are copied from a different-capacity inverter, there are parameters with different initial values depending on the inverter capacity, so the setting values of some parameters will be automatically changed. After performing a parameter copy from a different-capacity inverter, check all the parameter settings. (Refer to the parameter list (page 112) for details of parameters with different initial values depending on individual inverter capacity.)

◆Procedure for verifying parameters in USB memory

	Operation
1.	Copy the parameter settings of the verification source inverter to USB memory according to the procedure on page 525.
2.	Move the USB memory to the inverter to be verified.
3.	Screen at power-ON The monitor display appears.
4.	USB memory mode Press MODE to change to the USB memory mode.
5.	Displaying the file selection screen Press SET three times to display CP---- (file selection screen).
6.	Selecting the file number Turn to select the file number to be verified, and press SET.
7.	Parameter verification Turn to display the setting "3.VFY" (parameter copy verification mode), and press SET. "3. ALL" appears. Press SET. Verification of the parameter settings copied to the USB memory and the parameter settings of the verification destination inverter is started. (It takes about 15 seconds to verify all the settings. During verification, "3. ALL" flickers.) ●If there are different parameters, the different parameter number and "rE3" flicker. ●To continue verification, press SET.
8.	"Verified file number" and "3. ALL" flicker after verification ends.

NOTE

- rE3 flickers... Why?
  - The set frequency may be incorrect. To continue verification, press SET.

5.17 Checking parameters changed from their initial values (Initial value change list)

Parameters changed from their initial values can be displayed.

Operation

1. Screen at power-ON

The monitor display appears.

2. Parameter setting mode

Press MODE to choose the parameter setting mode. (The parameter number read previously appears.)

3. Selecting the parameter number

Turn to P r - C H G (Initial value change list), and press SET.

"P. -- -- -- -- " appears.

4. Checking the initial value change list

Turn . The parameter numbers that have been changed from their initial value appear in order.

●If SET is pressed with parameters that have been changed, the parameter settings can be changed as they are. (Parameter numbers are no longer displayed in the list when they are returned to their initial values.)

●Other changed parameters appear by turning .

"P. -- -- -- -- " is returned to when the last changed parameter is displayed.

NOTE

- Calibration parameters **(C0 (Pr.900) to C7 (Pr.905), C42 (Pr.934) to C45 (Pr.935))** are not displayed even when these are changed from the initial settings.
- Only the simple mode parameters are displayed when the simple mode is set (**Pr.160** ="9999").
- Only user groups are displayed when user groups are set (**Pr.160** = "1").
- **Pr.160** is displayed independently of whether the setting value is changed or not.
- Parameter setting using the initial value change list is also possible.

MEMO

6 PROTECTIVE FUNCTIONS

This chapter explains the "PROTECTIVE FUNCTION" that operates in this product.
Always read the instructions before using the equipment.

6.1 Inverter fault and alarm indications 530
6.2 Reset method for the protective functions 530
6.3 Check and clear of the faults history 531
6.4 The list of fault displays 533
6.5 Causes and corrective actions 535
6.6 Check first when you have a trouble 552

6.1 Inverter fault and alarm indications

- When the inverter detects a fault, depending on the nature of the fault, the operation panel displays an error message or warning, or a protective function activates to trip the inverter.
- When any fault occurs, take an appropriate corrective action, then reset the inverter, and resume the operation. Restarting the operation without a reset may break or damage the inverter.
- When a protective function activates, note the following points.

Item	Description
Fault output signal	Opening the magnetic contactor (MC) provided on the input side of the inverter at a fault occurrence shuts off the control power to the inverter, therefore, the fault output will not be retained.
Fault or alarm indication	When a protective function activates, the operation panel displays a fault indication.
Operation restart method	While a protective function is activated, the inverter output is kept shutoff. Reset the inverter to restart the operation.

- Inverter fault or alarm indications are categorized as below.

Displayed item	Description
Error message	A message regarding an operational fault and setting fault by the operation panel and the parameter unit. The inverter does not trip.
Warning	The inverter does not trip even when a warning. However, failure to take appropriate measures will lead to a fault.
Alarm	The inverter does not trip. An Alarm (LF) signal can also be output with a parameter setting.
Fault	A protective function activates to trip the inverter and output a Fault (ALM) signal.

NOTE

- The past eight faults can be displayed on the operation panel. (Faults history) (For the operation, refer to page 531.)

6.2 Reset method for the protective functions

Reset the inverter by performing any of the following operations. Note that the accumulated heat value of the electronic thermal relay function and the number of retries are cleared (erased) by resetting the inverter.
The inverter recovers about 1 s after the reset is released.

- On the operation panel, press STOP RESET to reset the inverter.
  (This may only be performed when a fault occurs. (Refer to page 541 of the Instruction Manual for faults.))

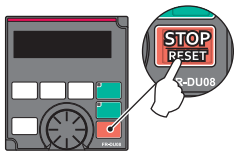

- Switch the power OFF once, then switch it ON again.

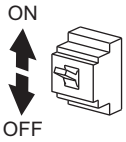

- Turn ON the reset signal (RES) for 0.1 s or more. (If the RES signal is kept ON, "Err" appears (flickers) to indicate that the inverter is in a reset status.)

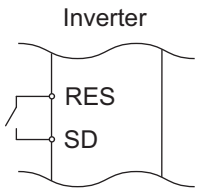

NOTE

- OFF status of the start signal must be confirmed before resetting the inverter fault. Resetting an inverter fault with the start signal ON restarts the motor suddenly.

6.3 Check and clear of the faults history

The operation panel stores the fault indications which appears when a protective function is activated to display the fault record for the past eight faults. (Faults history)

◆Check for the faults history

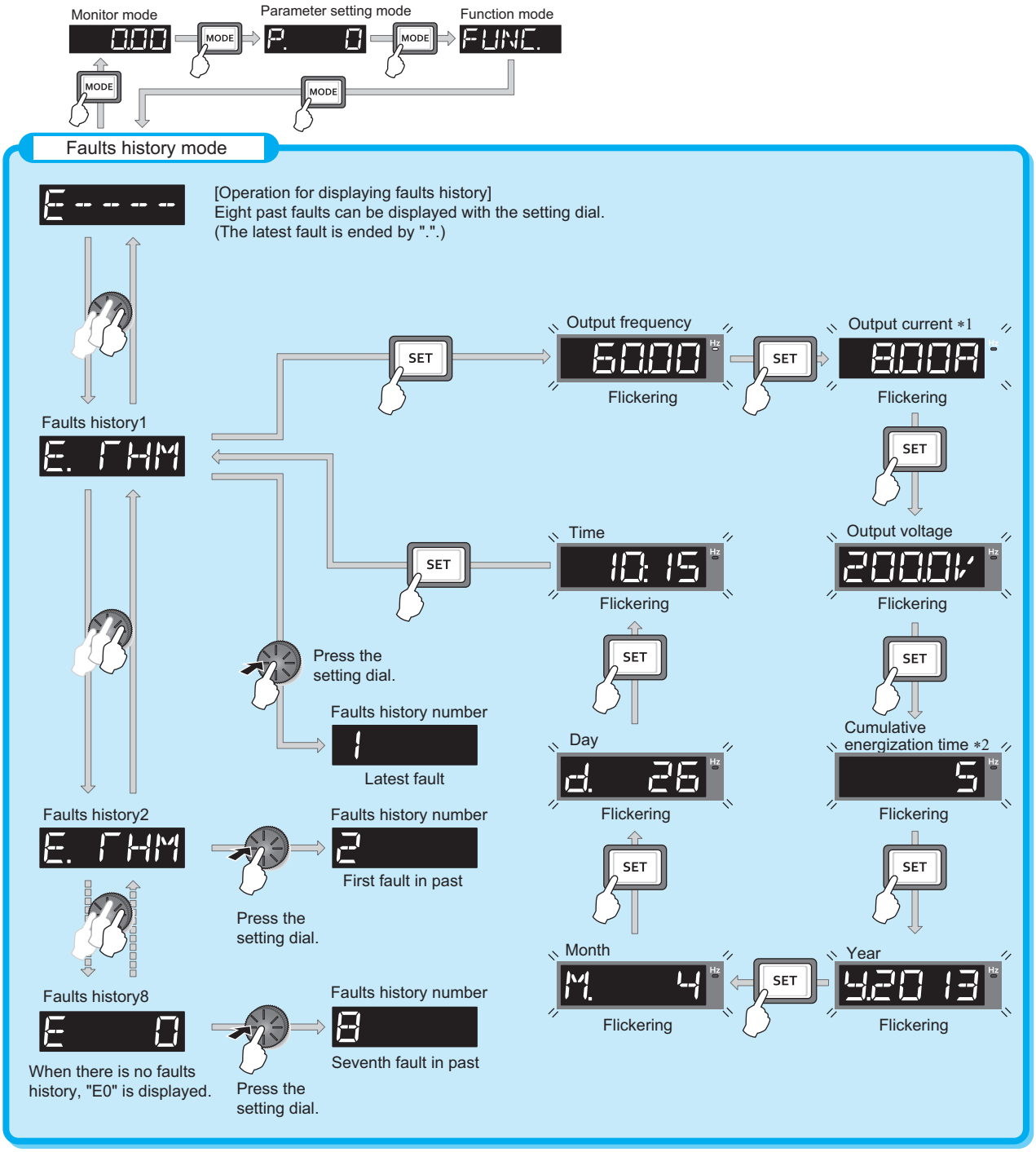

*1 When an overcurrent trip occurs by an instantaneous overcurrent, the monitored current value saved in the faults history may be lower than the actual current that has flowed.

*2 The cumulative energization time and actual operation time are accumulated from 0 to 65535 hours, then cleared, and accumulated again from 0.

◆Faults history clearing procedure

POINT

- Set **Err.CL Fault history clear** = "1" to clear the faults history.

	Operation
1.	Screen at power-ON The monitor display appears.
2.	Parameter setting mode Press [MODE] to choose the parameter setting mode. (The parameter number read previously appears.)
3.	Selecting the parameter number Turn until Err.CL (faults history clear) appears. Press [SET] to read the present set value. "0" (initial value) appears.
4.	Faults history clear Turn to change the set value to " 1". Press [SET] to start clear. " 1" and "Err.CL " flicker alternately after parameters are cleared. • Turn to read another parameter. • Press [SET] to show the setting again. • Press [SET] twice to show the next parameter.

6.4 The list of fault displays

If the displayed message does not correspond to any of the following or if you have any other problem, please contact your sales representative.

◆Error message

- A message regarding operational fault and setting fault by the operation panel and the parameter unit is displayed. The inverter does not trip.

Operation panel indication	Name	Refer to
E-----	Faults history	531
HOLd	Operation panel lock	535
LOCd	Password locked	535
Er 1 to Er4 Er8	Parameter write error	535
rE 1 to rE4 rE6 to rE8	Copy operation error	536
Err.	Error	537

◆Warning

- The inverter does not trip even when a warning is displayed. However, failure to take appropriate measures will lead to a fault.

Operation panel indication	Name	Refer to page
OL	Stall prevention (overcurrent)	538
oL	Stall prevention (overvoltage)	538
rH	Electronic thermal relay function pre-alarm	539
PS	PU stop	539
CP	Parameter copy	539
SA	Safety stop	539
MT 1 to MT3	Maintenance signal output	540
UF	USB host error	540
EV	24 V external power supply operation	540
Ed	Emergency drive in operation	540
LdF	Load fault warning	540

◆Alarm

- The inverter does not trip. An Alarm (LF) signal can also be output with a parameter setting.

Operation panel indication	Name	Refer to page
FN	Fan alarm	541

◆Fault

- A protective function trips the inverter and outputs a Fault (ALM) signal.
- The data code is used for checking the fault detail via communication or with **Pr.997 Fault initiation**.

Operation panel indication	Name	Data code	Refer to page
E. OC 1	Overcurrent trip during acceleration	16 (H10)	541
E. OC2	Overcurrent trip during constant speed	17 (H11)	541
E. OC3	Overcurrent trip during deceleration or stop	18 (H12)	542
E. OV 1	Regenerative overvoltage trip during acceleration	32 (H20)	542
E. OV2	Regenerative overvoltage trip during constant speed	33 (H21)	542
E. OV3	Regenerative overvoltage trip during deceleration or stop	34 (H22)	543
E. THT	Inverter overload trip (electronic thermal relay function)	48 (H30)	543
E. THM	Motor overload trip (electronic thermal relay function)	49 (H31)	543
E. FI N	Heatsink overheat	64 (H40)	543
E. I PF	Instantaneous power failure	80 (H50)	544
E. UVT	Undervoltage	81 (H51)	544
E. I LF	Input phase loss	82 (H52)	544
E. OLT	Stall prevention stop	96 (H60)	544
E. SOT	Loss of synchronism detection	97 (H61)	545
E. LUP	Upper limit fault detection	98 (H62)	545
E. LdN	Lower limit fault detection	99 (H63)	545
E. bE	Internal circuit fault	112 (H70)	549
E. GF	Output side earth (ground) fault overcurrent	128 (H80)	545
E. LF	Output phase loss	129 (H81)	546
E. OHT	External thermal relay operation	144 (H90)	546

The list of fault displays

Operation panel indication	Name	Data code	Refer to page
E. PTC	PTC thermistor operation	145 (H91)	546
E. OPT	Option fault	160 (HA0)	546
E. OP1	Communication option fault	161 (HA1)	547
E. 16	User definition error by the PLC function	164 (HA4)	547
E. 17		165 (HA5)	
E. 18		166 (HA6)	
E. 19		167 (HA7)	
E. 20		168 (HA8)	
E. PE	Parameter storage device fault	176 (HB0)	547
E. PUE	PU disconnection	177 (HB1)	547
E. RET	Retry count excess	178 (HB2)	547
E. PE2	Parameter storage device fault	179 (HB3)	547
E. CPU	CPU fault	192 (HC0)	548
E. 5		245 (HF5)	
E. 6		246 (HF6)	
E. 7		247 (HF7)	
E. CTE	Operation panel power supply short circuit/RS-485 terminals power supply short circuit	193 (HC1)	548
E. P24	24 VDC power fault	194 (HC2)	548
E. CdO	Abnormal output current detection	196 (HC4)	548
E. IOH	Inrush current limit circuit fault	197 (HC5)	548
E. SER	Communication fault (inverter)	198 (HC6)	549
E. AIE	Analog input fault	199 (HC7)	549
E. USb	USB communication fault	200 (HC8)	549
E. SAF	Safety circuit fault	201 (HC9)	549
E. PbT	Internal circuit fault	202 (HCA)	549
E. 13		253 (HFD)	549
E. OS	Overspeed occurrence	208 (HD0)	550
E. LCI	4 mA input fault	228 (HE4)	550
E. PCH	Pre-charge fault	229 (HE5)	550
E. PId	PID signal fault	230 (HE6)	550

Operation panel indication	Name	Data code	Refer to page
E. 1	Option fault	241 (HF1)	551
E. 2		242 (HF2)	
E. 3		243 (HF3)	

If faults other than the above appear, contact your sales representative.

6.5 Causes and corrective actions

◆Error message

A message regarding operational troubles is displayed. Output is not shut off.

Operation panel indication	HOLD	HOLd
Name	Operation panel lock	
Description	Operation lock is set. Operation other than STOP RESET is invalid. (Refer to page 166.)	
Check point	————	
Corrective action	Press MODE for 2 s to release the lock.	

Operation panel indication	LOCD	LOCd
Name	Password locked	
Description	Password function is active. Display and setting of parameters are restricted.	
Check point	————	
Corrective action	Enter the password in **Pr.297 Password lock/unlock** to unlock the password function before operating.(Refer to page 173.)	

Operation panel indication	Er1	Er 1
Name	Parameter write error	
Description	• Parameter setting was attempted while **Pr.77 Parameter write selection** is set to disable parameter write. • Overlapping range has been set for the frequency jump. • Overlapping range has been set for the adjustable 5 points V/F. • The PU and inverter cannot make normal communication. • IPM parameter initialization was attempted while **Pr.72** = "25".	
Check point	• Check the **Pr.77 Parameter write selection** setting. (Refer to page 169.) • Check the settings of **Pr.31 to Pr.36 (frequency jump)**. (Refer to page 246.) • Check the settings of **Pr.100 to Pr.109 (adjustable 5 points V/F)**. (Refer to page 501.) • Check the connection of PU and the inverter. • Check the **Pr.72 PWM frequency selection** setting. A sine wave filter cannot be used under PM motor control.	

Operation panel indication	Er2	Er2
Name	Write error during operation	
Description	Parameter write was attempted while **Pr.77** = "0".	
Check point	• Check that the inverter is stopped.	
Corrective action	• After stopping the operation, make parameter setting. • When setting **Pr.77** = "2", parameter write is enabled during operation. (Refer to page 169.)	

Operation panel indication	Er3	Er3
Name	Calibration error	
Description	Analog input bias and gain calibration values have been set too close.	
Check point	Check the settings of **calibration parameters C3, C4, C6 and C7** (calibration functions). (Refer to page 314.)	

Operation panel indication	Er4	Er4
Name	Mode designation error	
Description	• Parameter setting was attempted in the External or NET operation mode while **Pr.77** = "1". • Parameter write was attempted when the command source is not at the operation panel (FR-DU08).	
Check point	• Check that operation mode is PU operation mode. • Check that the **Pr.551** setting is correct.	
Corrective action	• After setting the operation mode to the "PU operation mode", make parameter setting. (Refer to page 200.) • When **Pr.77** = "2", parameter write is enabled regardless of the operation mode. (Refer to page 169.) • Set **Pr.551** = "2". (Refer to page 210.)	

Operation panel indication	Er8	Er-8
Name	USB memory device operation error	
Description	• An operation command was given during the USB memory device operation. • A copy operation (writing) was performed while the PLC function was in the RUN state. • A copy operation was attempted for a password locked project.	
Check point	• Check if the USB memory device is operating. • Check if the PLC function is in the RUN state. • Check if the project data is locked with a password.	
Corrective action	• Perform the operation after the USB memory device operation is completed. • Stop the PLC function. (Refer to page 433 and the PLC function programming manual.) • Unlock the password of the project data using FR Configurator2. (Refer to the Instruction Manuals of FR Configurator2 and GX Works2.)	

Operation panel indication	rE1	rE 1
Name	Parameter read error	
Description	• A failure has occurred at the operation panel side EEPROM while reading the copied parameters. • A failure has occurred in the USB memory device while copying the parameters or reading the PLC function project data.	
Check point	———	
Corrective action	• Perform parameter copy again. (Refer to page 521, page 524.) • Perform PLC function project data copy again.(Refer to page 433) • The USB memory device may be faulty. Replace the USB memory device. • The operation panel (FR-DU08) may be faulty. Please contact your sales representative.	

Operation panel indication	rE2	rE2
Name	Parameter write error	
Description	• Parameter copy from the operation panel to the inverter was attempted during operation. • A failure has occurred at the operation panel side EEPROM while writing the copied parameters. • A failure has occurred in the USB memory device while writing the copied parameters or PLC function project data.	
Check point	• Check that the inverter is stopped.	
Corrective action	• After stopping the operation, perform parameter copy again. (Refer to page 521.) • The operation panel (FR-DU08) may be faulty. Please contact your sales representative. • Perform parameter copy or PLC project data copy again. (Refer to page 433 and page 524) • The USB memory device may be faulty. Replace the USB memory device.	

Operation panel indication	rE3	rE3
Name	Parameter verification error	
Description	• The data in the inverter are different from the data in the operation panel. • A failure has occurred at the operation panel side EEPROM during parameter verification. • A failure has occurred in the USB memory device during parameter verification. • The data in the inverter are different from the data in the USB memory device or the personal computer (FR Configurator2)	
Check point	• Check the parameter setting of the source inverter against the setting of the destination inverter.	
Corrective action	• Continue the verification by pressing SET. Perform parameter verification again. (Refer to page 523.) • The operation panel (FR-DU08) may be faulty. Please contact your sales representative. • The USB memory device may be faulty. Replace the USB memory device. • Verify the PLC function project data again.(Refer to page 433.)	

Operation panel indication	rE4	rE4
Name	Model error	
Description	• A different model was used when parameter copy from the operation panel or parameter verification was performed. • The data in the operation panel were not correct when parameter copy from the operation panel or parameter verification was performed.	
Check point	• Check that the parameter copy or verification source inverter is of the same model. • Check that parameter copy to the operation panel was not interrupted by switching OFF the power or by disconnecting the operation panel.	
Corrective action	• Perform parameter copy and parameter verification between inverters of the same model (FR-F800 series). • Perform parameter copy to the operation panel from the inverter again.	

Operation panel indication	rE6	rE6
Name	File error	
Description	• The parameter copy file in the USB memory device cannot be recognized. • An error has occurred in the file system during transfer of the PLC function data or writing to RAM.	
Check point	———	
Corrective action	• Perform parameter copy again.(Refer to page 524.) • Copy the PLC function project data again.(Refer to page 433.)	

Operation panel indication	rE7	rE7
Name	File quantity error	
Description	• A parameter copy was attempted to the USB memory device in which the copy files from 001 to 099 had already been saved.	
Check point	• Check if the number of copy files in the USB memory device has reached 99.	
Corrective action	• Delete the copy file in the USB memory device and perform parameter copy again.(Refer to page 524.)	

Operation panel indication	rE8	rE8
Name	No PLC function project file	
Description	The specified PLC function project file does not exist in the USB memory device.	
Check point	• Check that the file exists in the USB memory device. • Check that the folder name and the file name in the USB memory device is correct.	
Corrective action	The data in the USB memory device may be damaged.	

Operation panel indication	Err.	Err.
Description	• The RES signal is turned ON. • The operation panel and inverter cannot make normal communication (contact faults of the connector). • This error may occur when the voltage at the input side of the inverter drops. • When using a separate power source for the control circuit power (R1/L11, S1/L21) from the main circuit power (R/L1, S/L2, T/L3), this error may appear at turning ON of the main circuit. It is not a fault.	
Corrective action	• Turn OFF the RES signal. • Check the connection between the operation panel and the inverter. • Check the voltage on the input side of the inverter.	

◆Warning

Output is not shut off when a protective function activates.

Operation panel indication	OL		FR-PU07	OL
Name	Stall prevention (overcurrent)			
Description	• When the output current of the inverter increases, the stall prevention (overcurrent) function activates. • The following section explains about the stall prevention (overcurrent) function.			
	During acceleration	When the output current of the inverter exceeds the stall prevention level (**Pr.22 Stall prevention operation level,** etc.), this function stops the increase in frequency until the overload current decreases to prevent the inverter from resulting in overcurrent trip. When the overload current has reduced below stall prevention operation level, this function increases the frequency again.		
	During constant-speed operation	When the output current of the inverter exceeds the stall prevention level (**Pr.22 Stall prevention operation level,** etc.), this function reduces frequency until the overload current decreases to prevent the inverter from resulting in overcurrent trip. When the overload current has reduced below stall prevention operation level, this function increases the frequency up to the set value.		
	During deceleration	When the output current of the inverter exceeds the stall prevention level (**Pr.22 Stall prevention operation level,** etc.), this function stops the decrease in frequency until the overload current decreases to prevent the inverter from resulting in overcurrent trip. When the overload current has decreased below stall prevention operation level, this function decreases the frequency again.		
Check point	• Check that the **Pr.0 Torque boost** setting is not too large. • The **Pr.7 Acceleration time and Pr.8 Deceleration time** settings may be too short. • Check that the load is not too heavy. • Check for any failures in peripheral devices. • Check that the **Pr.13 Starting frequency** is not too large. • Check that **Pr.22 Stall prevention operation level** is appropriate.			
Corrective action	• **Gradually increase or decrease the Pr.0 setting by 1% at a time and check the motor status.(Refer to page 496.)** • Set a larger value in **Pr.7 Acceleration time and Pr.8 Deceleration time**. (Refer to page 187.) • Reduce the load. • Try Advanced magnetic flux vector control. • Change the **Pr.14 Load pattern selection** setting. • The stall prevention operation current can be set in **Pr.22 Stall prevention operation level**. The acceleration/deceleration time may change. Increase the stall prevention operation level with **Pr.22 Stall prevention operation level**, or disable stall prevention with **Pr.156 Stall prevention operation selection**. (Use **Pr.156** to set either operation continued or not at OL operation.)			

Operation panel indication	oL		FR-PU07	oL
Name	Stall prevention (overvoltage)			
Description	• When the output voltage of the inverter increases, the stall prevention (overvoltage) function activates. • The regeneration avoidance function activates due to excessive regenerative power of the motor. (Refer to page 514.) • The following section explains the stall prevention (overvoltage) function.			
	During deceleration	If the regenerative power of the motor becomes excessive to exceed the regenerative power consumption capability, this function stops decreasing the frequency to prevent overvoltage trip. As soon as the regenerative power has reduced, deceleration resumes.		
Check point	• Check for sudden speed reduction. • Check if the regeneration avoidance function **(Pr.882 to Pr.886)** is being used. (Refer to page 514.)			
Corrective action	The deceleration time may change. Increase the deceleration time using **Pr.8 Deceleration time**.			

Operation panel indication	TH	TH	FR-PU07	TH
Name	Electronic thermal relay function pre-alarm			
Description	Appears if the cumulative value of the electronic thermal O/L relay reaches or exceeds 85% of the preset level of **Pr.9 Electronic thermal O/L relay**. If the value reaches 100% of **Pr.9** setting, motor overload trip (E.THM) occurs.			
Check point	• Check for large load or sudden acceleration. • Check that the **Pr.9** setting is appropriate. (Refer to page 225.)			
Corrective action	• Reduce the load and frequency of operation. • Set an appropriate value in **Pr.9**. (Refer to page 225.)			

Operation panel indication	PS	PS	FR-PU07	PS
Name	PU stop			
Description	• The motor is stopped using STOP RESET under the mode other than the PU operation mode. (To enable STOP RESET under the mode other than the PU operation mode, set **Pr.75 Reset selection/disconnected PU detection/PU stop selection**. Refer to page 162 for details.)			
Check point	• Check for a stop made by pressing STOP RESET of the operation panel.			
Corrective action	• Turn the start signal OFF and release with PU EXT.			

Operation panel indication	CP	CP	FR-PU07	CP
Name	Parameter copy			
Description	Appears when parameter copy is performed between inverters FR-F820-02330(55K) or lower, FR-F840-01160(55K) or lower, FR-F820-03160(75K) or higher and FR-F840-01800(75K) or higher			
Check point	Resetting of **Pr.9, Pr.30, Pr.51, Pr.56, Pr.57, Pr.72, Pr.80, Pr.82, Pr.90 to Pr.94, Pr.453, Pr.455, Pr.458 to Pr.462, Pr.557, Pr.859, Pr.860 and Pr.893** is necessary.			
Corrective action	Set the initial value in **Pr.989 Parameter copy alarm release**.			

Operation panel indication	SA	SA	FR-PU07	—
Name	Safety stop			
Description	Appears when safety stop function is activated (during output shutoff). (Refer to page 58.)			
Check point	• Check if an emergency stop device is activated. • Check if the shorting wire between S1 and PC or between S2 and PC is disconnected when not using the safety stop function.			
Corrective action	• An emergency stop device is active when using the safety stop function. Identify the cause of emergency stop, ensure the safety and restart the system. • When not using the safety stop function, short across terminals S1 and PC and across S2 and PC with shorting wire for the inverter to run. • If SA is indicated when wires across S1 and SIC and across S2 and SIC are both conducted while using the safety stop function (drive enabled), internal failure might be the cause. Check the wiring of terminals S1, S2 and SIC and contact your sales representative if the wiring has no fault.			

Operation panel indication	MT1 to MT3	MT 1 to MT 3	FR-PU07	MT*1
Name	Maintenance signal output 1 to 3			
Description	Appears when the inverter's cumulative energization time reaches or exceeds the parameter set value. Set the time until the MT is displayed using **Pr.504 Maintenance timer 1 warning output set time** (MT1), **Pr.687 Maintenance timer 2 warning output set time** (MT2), and **Pr.689 Maintenance timer 3 warning output set time** (MT3). MT does not appear when the settings of **Pr.504, Pr.687, and Pr.689** are initial values (9999).			
Check point	The set time of maintenance timer has been exceeded. (Refer to page 184.)			
Corrective action	Take appropriate countermeasures according to the purpose of the maintenance timer setting. Setting "0" in **Pr.503 Maintenance timer 1, Pr.686 Maintenance timer 2**, and **Pr.688 Maintenance timer 3** clears the indication.			

*1 MT appears for all of MT1, MT2 and MT3.

Operation panel indication	UF	UF	FR-PU07	—
Name	USB host error			
Description	Appears when an excessive current flows into the USB A connector.			
Check point	Check if a USB device other than a USB memory device is connected to the USB A connector.			
Corrective action	• If a device other than a USB memory device is connected to the USB A connector, remove the device. • Setting **Pr.1049 USB host reset** = "1" or inverter reset clears the UF indication.			

Operation panel indication	EV	EV	FR-PU07	—
Name	24 V external power supply operation			
Description	Flickers when the main circuit power supply is off and the 24 V external power supply is being input.			
Check point	• Power is supplied from a 24 V external power supply.			
Corrective action	• Turning ON the power supply (main circuit) of the inverter clears the indication. • If the indication is still displayed after turning ON of the power supply (main circuit) of the inverter, the power supply voltage may be low, or the jumper between the terminals P/+ and P1 may be disconnected.			

Operation panel indication	ED	Ed	FR-PU07	—
Name	Emergency drive in operation			
Description	Appears during emergency drive operation.			
Check point	• Emergency drive operation is performed by turning ON X84 signal.			
Corrective action	• The display is cleared when the emergency drive operation ends. (Refer to page 238.)			

Operation panel indication	LDF	LdF	FR-PU07	—
Name	Load fault warning			
Description	Appears when the load is deviated from the detection width set in **Pr.1488 Upper limit warning detection width** or **Pr.1489 Lower limit warning detection width**.			
Check point	• Check if too much load is applied to the equipment, or if the load is too light. • Check that the load characteristics settings are correct.			
Corrective action	• Inspect the equipment. • Set the load characteristics (**Pr.1481 to Pr.1487**) correctly.			

◆Alarm

Output is not shut off when a protective function activates. An alarm can also be output with a parameter setting.
(Set "98" in **Pr.190 to Pr.196 (output terminal function selection).** (Refer to page 288.)

Operation panel indication	FN		FR-PU07	FN
Name	Fan alarm			
Description	For the inverter that contains a cooling fan, FN appears on the operation panel when the cooling fan stops due to a fault, low rotation speed or different operation from the setting of **Pr.244 Cooling fan operation selection**.			
Check point	Check the cooling fan for a failure.			
Corrective action	The fan may be faulty. Please contact your sales representative.			

◆Fault

When a protective function activates, the inverter trips and a fault signal is output.

Operation panel indication	E.OC1		FR-PU07	OC During Acc
Name	Overcurrent trip during acceleration			
Description	When the inverter output current reaches or exceeds approximately 170% (LD rating) / 148% (SLD rating) of the rated current during acceleration, the protection circuit is activated and the inverter trips.			
Check point	• Check for sudden speed acceleration. • Check if the downward acceleration time is too long in a lift application. • Check for output short-circuit. • Check that the **Pr.3 Base frequency** setting is not 60 Hz when the motor rated frequency is 50 Hz. • Check if the stall prevention operation level is set too high. Check if the fast-response current limit operation is disabled. • Check that the regenerative driving is not performed frequently. (Check if the output voltage becomes larger than the V/F reference voltage at regenerative driving and overcurrent occurs due to increase in the motor current.) • Check that the inverter capacity matches with the motor capacity. (PM motor control) • Check if a start command is given to the inverter while the motor is coasting. (PM motor control)			
Corrective action	• Set the acceleration time longer. (Shorten the downward acceleration time of the lift.) • If "E.OC1" always appears at start, disconnect the motor once and restart the inverter. If "E.OC1" still appears, contact your sales representative. • Check the wiring to make sure that output short circuit does not occur. • Set 50 Hz in **Pr.3 Base frequency**. (Refer to page 497.) • Lower the stall prevention operation level. Activate the fast-response current limit operation. (Refer to page 248.) • Set the base voltage (rated voltage of the motor, etc.) in **Pr.19 Base frequency voltage**. (Refer to page 497.) • Choose inverter and motor capacities that match. (PM motor control) • Input a start command after the motor stops. Alternatively, use the automatic restart after instantaneous power failure/flying start function. (Refer to page 420.) (IPM motor control)			

Operation panel indication	E.OC2		FR-PU07	Stedy Spd OC
Name	Overcurrent trip during constant speed			
Description	When the inverter output current reaches or exceeds approximately 170% (LD rating) / 148% (SLD rating) of the rated current during constant-speed operation, the protection circuit is activated and the inverter trips.			
Check point	• Check for sudden load change. • Check for output short-circuit. • Check if the stall prevention operation level is set too high. Check if the fast-response current limit operation is disabled. • Check that the inverter capacity matches with the motor capacity. (PM motor control) • Check if a start command is given to the inverter while the motor is coasting. (PM motor control)			
Corrective action	• Keep the load stable. • Check the wiring to make sure that output short circuit does not occur. • Lower the stall prevention operation level. Activate the fast-response current limit operation. (Refer to page 248.) • Choose inverter and motor capacities that match. (PM motor control) • Input a start command after the motor stops. Alternatively, use the automatic restart after instantaneous power failure/flying start function. (Refer to page 420.) (PM motor control)			

Operation panel indication	E.OC3		FR-PU07	OC During Dec
Name	Overcurrent trip during deceleration or stop			
Description	When the inverter output current reaches or exceeds approximately 170% (LD rating) / 148% (SLD rating) of the rated current during deceleration (other than acceleration or constant speed), the protection circuit is activated and the inverter trips.			
Check point	• Check for sudden speed reduction. • Check for output short-circuit. • Check for too fast operation of the motor's mechanical brake. • Check if the stall prevention operation level is set too high. Check if the fast-response current limit operation is disabled. • Check that the inverter capacity matches with the motor capacity. (PM motor control) • Check if a start command is given to the inverter while the motor is coasting. (PM motor control)			
Corrective action	• Set the deceleration time longer. • Check the wiring to make sure that output short circuit does not occur. • Check the mechanical brake operation. • Lower the stall prevention operation level. Activate the fast-response current limit operation. (Refer to page 248.) • Choose inverter and motor capacities that match. (PM motor control) • Input a start command after the motor stops. Alternatively, use the automatic restart after instantaneous power failure/flying start function. (Refer to page 420.) (PM motor control)			

Operation panel indication	E.OV1		FR-PU07	OV During Acc
Name	Regenerative overvoltage trip during acceleration			
Description	If regenerative power causes the inverter's internal main circuit DC voltage to reach or exceed the specified value, the protection circuit is activated to stop the inverter output. The circuit may also be activated by a surge voltage produced in the power supply system.			
Check point	• Check for too slow acceleration. (e.g. during downward acceleration in vertical lift load) • Check that the **Pr.22 Stall prevention operation level** is not set to the no load current or lower. • Check if the stall prevention operation is frequently activated in an application with a large load inertia.			
Corrective action	• Set the acceleration time shorter. Use the regeneration avoidance function **(Pr.882 to Pr.886)**. (Refer to page 514.) • Set a value larger than the no load current in **Pr.22**. • Set **Pr.154 Voltage reduction selection during stall prevention operation** = "10, 11". (Refer to page 248.)			

Operation panel indication	E.OV2		FR-PU07	Stedy Spd OV
Name	Regenerative overvoltage trip during constant speed			
Description	If regenerative power causes the inverter's internal main circuit DC voltage to reach or exceed the specified value, the protection circuit is activated to stop the inverter output. The circuit may also be activated by a surge voltage produced in the power supply system.			
Check point	• Check for sudden load change. • Check that the **Pr.22 Stall prevention operation level** is not set to the no load current or lower. • Check if the stall prevention operation is frequently activated in an application with a large load inertia. • Check that acceleration/deceleration time is not too short.			
Corrective action	• Keep the load stable. • Use the regeneration avoidance function **(Pr.882 to Pr.886**). (Refer to page 514.) • Use the brake unit or power regeneration common converter (FR-CV) as required. • Set a value larger than the no load current in **Pr.22**. • Set **Pr.154 Voltage reduction selection during stall prevention operation** = "10, 11". (Refer to page 248.) • Set the acceleration/deceleration time longer. (Under Advanced magnetic flux vector control, the output torque can be increased. However, sudden acceleration may cause an overshoot in speed, resulting in an occurrence of overvoltage.)			

Operation panel indication	E.OV3		FR-PU07	OV During Dec
Name	Regenerative overvoltage trip during deceleration or stop			
Description	If regenerative power causes the inverter's internal main circuit DC voltage to reach or exceed the specified value, the protection circuit is activated to stop the inverter output. The circuit may also be activated by a surge voltage produced in the power supply system.			
Check point	• Check for sudden speed reduction. • Check if the stall prevention operation is frequently activated in an application with a large load inertia.			
Corrective action	• Set the deceleration time longer. (Set the deceleration time which matches the moment of inertia of the load.) • Make the brake cycle longer. • Use the regeneration avoidance function **(Pr.882 to Pr.886)**. (Refer to page 514.) • Use the brake unit or power regeneration common converter (FR-CV) as required. • Set **Pr.154 Voltage reduction selection during stall prevention operation** = "10, 11". (Refer to page 248.)			

Operation panel indication	E.THT		FR-PU07	Inv. Overload
Name	Inverter overload trip*1			
Description	When the temperature of the output transistor element exceeds the protection level while a current flows at the rated output current level or higher without causing an overcurrent trip (E.OC[]), the inverter output is stopped.(Permissible overload capacity 120% 60 s)			
Check point	• Check that acceleration/deceleration time is not too short. • Check that torque boost setting is not too large (small). • Check that load pattern selection setting is appropriate for the load pattern of the using machine. • Check the motor for the use under overload.			
Corrective action	• Set the acceleration/deceleration time longer. • Adjust the torque boost setting. • Set the load pattern selection setting according to the load pattern of the using machine. • Reduce the load.			

*1 Resetting the inverter initializes the internal cumulative heat value of the electronic thermal O/L relay function.

Operation panel indication	E.THM		FR-PU07	Motor Ovrload
Name	Motor overload trip*2			
Description	The electronic thermal O/L relay function in the inverter detects motor overheat, which is caused by overload or reduced cooling capability during low-speed operation. When the cumulative heat value reaches 85% of the **Pr.9 Electronic thermal O/L relay** setting, pre-alarm (TH) is output. When the accumulated value reaches the specified value, the protection circuit is activated to stop the inverter output.			
Check point	• Check the motor for the use under overload. • Check that the setting of **Pr.71 Applied motor** for motor selection is correct. (Refer to page 337.) • Check that the stall prevention operation setting is correct.			
Corrective action	• Reduce the load. • For a constant-torque motor, set the constant-torque motor in **Pr.71**. • Set the stall prevention operation level accordingly. (Refer to page 248.)			

*2 Resetting the inverter initializes the internal cumulative heat value of the electronic thermal O/L relay function.

Operation panel indication	E.FIN		FR-PU07	H/Sink O/Temp
Name	Heatsink overheat			
Description	When the heatsink overheats, the temperature sensor activates, and the inverter output is stopped. The FIN signal can be output when the temperature becomes approximately 85% of the heatsink overheat protection operation temperature. For the terminal used for the FIN signal output, assign the function by setting "26 (positive logic) or 126 (negative logic)" from **Pr.190 to Pr.196 (output terminal function selection)**. (Refer to page 288.)			
Check point	• Check for too high surrounding air temperature. • Check for heatsink clogging. • Check that the cooling fan is not stopped. (Check that FN is not displayed on the operation panel.)			
Corrective action	• Set the surrounding air temperature to within the specifications. • Clean the heatsink. • Replace the cooling fan.			

Operation panel indication	E.IPF	E. 1PF	FR-PU07	Inst. Pwr. Loss
Name	Instantaneous power failure (Standard models only)			
Description	If a power failure occurs for longer than 15 ms (this also applies to inverter input shut-off), the instantaneous power failure protective function is activated to trip the inverter in order to prevent the control circuit from malfunctioning. If a power failure persists for 100 ms or longer, the fault warning output is not provided, and the inverter restarts if the start signal is ON upon power restoration. (The inverter continues operating if an instantaneous power failure is within 15 ms.) In some operating status (load magnitude, acceleration/deceleration time setting, etc.), overcurrent or other protection may be activated upon power restoration. When instantaneous power failure protection is activated, the IPF signal is output. (Refer to **page 414**, **page 420**.)			
Check point	Find the cause of instantaneous power failure occurrence.			
Corrective action	• Remedy the instantaneous power failure. • Prepare a backup power supply for instantaneous power failure. • Set the function of automatic restart after instantaneous power failure **(Pr. 57)**. (Refer to **page 414**, **page 420**.)			

Operation panel indication	E.UVT	E. UVT	FR-PU07	Under Voltage
Name	Undervoltage (Standard models only)			
Description	If the power supply voltage of the inverter decreases, the control circuit will not perform normal functions. In addition, the motor torque will be insufficient and/or heat generation will increase. To prevent this, if the power supply voltage decreases to about 150 VAC (300 VAC for the 400 V class) or below, this function shuts off the inverter output. When a jumper is not connected across P/+ and P1, the undervoltage protective function is activated. When undervoltage protection is activated, the IPF signal is output. (Refer to **page 414**, **page 420**.)			
Check point	• Check if a high-capacity motor is driven. • Check if the jumper is connected across terminals P/+ and P1.			
Corrective action	• Check the power supply system equipment such as the power supply. • Do not remove the jumper across terminals P/+ and P1 except when connecting a DC reactor. • If the problem still persists after taking the above measure, contact your sales representative.			

Operation panel indication	E.ILF	E. 1LF	FR-PU07	Input phase loss
Name	Input phase loss (Standard models only)			
Description	When **Pr.872 Input phase loss protection selection** is enabled ("1") and one of the three-phase power input is lost, the inverter output is shut off. This protective function is not available when **Pr.872** is set to the initial value (**Pr.872** = "0"). (Refer to **page 235**)			
Check point	Check for a break in the cable for the three-phase power supply input.			
Corrective action	• Wire the cables properly. • Repair a break portion in the cable.			

Operation panel indication	E.OLT	E. OLT	FR-PU07	Stll Prev STP
Name	Stall prevention stop			
Description	V/F Magnetic flux If the output frequency has fallen to 0.5 Hz by stall prevention operation and remains for 3 s, a fault (E.OLT) appears and the inverter trips. OL appears while stall prevention is being activated. PM During speed control, a fault (E.OLT) appears and the inverter trips if the frequency value converted from the motor rotation speed drops to 1.5 Hz or lower by stall prevention operation and the output torque exceeds the **Pr.874 OLT level setting** (refer to **page 248**) and remains there for 3 s.			
Check point	• Check the motor for the use under overload. • Check that the **Pr.865** and **Pr.874** values are correct. (Check the **Pr.22 Stall prevention operation level** setting under V/F control and Advanced magnetic flux vector control.) • Check if a motor is connected under PM motor control.			
Corrective action	• Reduce the load. • Change the **Pr.22**, **Pr.865**, and **Pr.874** values. (Check the **Pr.22** setting under V/F control and Advanced magnetic flux vector control.) • For a test run without connecting a motor, select the PM sensorless vector control test operation.(Refer to **page 144**.) • Also check that the stall prevention (overcurrent) warning (OL) or the stall prevention (overvoltage) warning (oL) countermeasure is taken.			

Operation panel indication	E.SOT PM	E. SOT	FR-PU07	Motor step out
Name	Loss of synchronism detection			
Description	The inverter trips when the motor operation is not synchronized. (This function is only available under PM motor control.)			
Check point	• Check that the PM motor is not driven overloaded. • Check if a start command is given to the inverter while the PM motor is coasting. • Check if a motor is connected under PM motor control. • Check if a PM motor other than the MM-EFS/MM-THE4 series is driven.			
Corrective action	• Set the acceleration time longer. • Reduce the load. • If the inverter restarts during coasting, set **Pr.57 Restart coasting time** ≠ "9999", and select the automatic restart after instantaneous power failure. • Check the connection of the IPM motor. • For a test run without connecting a motor, select the PM motor control test operation.(Refer to page 144.) • Drive an IPM motor (MM-EFS/MM-THE4) • When driving an IPM motor other than MM-EFS/MM-THE4 series, offline auto tuning must be performed. (Refer to page 351.)			

Operation panel indication	E.LUP	E. LUP	FR-PU07	Fault
Name	Upper limit fault detection			
Description	When the load exceeds the upper limit fault detection range, the inverter trips. This protective function is not available in the initial setting of **Pr.1490** (**Pr.1490** = "9999").			
Check point	• Check if too much load is applied to the equipment. • Check that the load characteristics settings are correct.			
Corrective action	• Inspect the equipment. • Set the load characteristics (**Pr.1481 to Pr.1487**) correctly.			

Operation panel indication	E.LDN	E. LdN	FR-PU07	Fault
Name	Lower limit fault detection			
Description	When the load falls below the lower limit fault detection range, the inverter trips. This protective function is not available in the initial setting of **Pr.1491** (**Pr.1491** = "9999").			
Check point	• Check if the equipment load is too light. • Check that the load characteristics settings are correct.			
Corrective action	• Inspect the equipment. • Set the load characteristics (**Pr.1481 to Pr.1487**) correctly.			

Operation panel indication	E.GF	E. GF	FR-PU07	Ground Fault
Name	Output side earth (ground) fault overcurrent			
Description	The inverter trips if an earth (ground) fault overcurrent flows due to an earth (ground) fault that occurred on the inverter's output side (load side).			
Check point	Check for an earth (ground) fault in the motor and connection cable.			
Corrective action	Remedy the earth (ground) fault portion.			

Causes and corrective actions

Operation panel indication	E.LF	E. LF	FR-PU07	E.LF
Name	Output phase loss			
Description	The inverter trips if one of the three phases (U, V, W) on the inverter's output side (load side) is lost.			
Check point	• Check the wiring. (Check that the motor is normally operating.) • Check that the capacity of the motor used is not smaller than that of the inverter. • Check if a start command is given to the inverter while the motor is coasting. (PM motor control)			
Corrective action	• Wire the cables properly. • Input a start command after the motor stops. Alternatively, use the automatic restart after instantaneous power failure/flying start function (page 420). (PM motor control)			

Operation panel indication	E.OHT	E. OHT	FR-PU07	OH Fault
Name	External thermal relay operation			
Description	The inverter trips if the external thermal relay provided for motor overheat protection or the internally mounted thermal relay in the motor, etc. switches ON (contacts open). This function is available when "7" (OH signal) is set in any of **Pr.178 to Pr.189 (input terminal function selection)**. This protective function is not available in the initial status. (OH signal is not assigned.)			
Check point	• Check for motor overheating. • Check that the value "7" (OH signal) is set correctly to any of **Pr.178 to Pr.189 (input terminal function selection)**.			
Corrective action	• Reduce the load and operation duty. • Even if the relay contacts are reset automatically, the inverter will not restart unless it is reset.			

Operation panel indication	E.PTC	E. PTC	FR-PU07	PTC activated
Name	PTC thermistor operation			
Description	The inverter trips if resistance of the PTC thermistor connected between the terminal 2 and terminal 10 is equal to or higher than the **Pr.561 PTC thermistor protection level** setting for a continuous time equal to or longer than the setting value in **Pr.1016 PTC thermistor protection detection time**. When the initial value (**Pr.561** = "9999") is set, this protective function is not available.			
Check point	• Check the connection with the PTC thermistor. • Check the **Pr.561, Pr.1016** setting. • Check the motor for operation under overload.			
Corrective action	Reduce the load.			

Operation panel indication	E.OPT	E. OPT	FR-PU07	Option Fault
Name	Option fault			
Description	• Appears when the AC power supply is connected to the terminal R/L1, S/L2, or T/L3 accidentally when a high power factor converter (FR-HC2) or power regeneration common converter (FR-CV) is connected (when **Pr.30 Regenerative function selection** = "2"). • Appears when the switch for manufacturer setting of the plug-in option is changed. • Appears when a communication option is connected while **Pr.296 Password lock level** = "0 or 100".			
Check point	• Check that the AC power supply is not connected to the terminal R/L1, S/L2, or T/L3 when a high power factor converter (FR-HC2) or power regeneration common converter (FR-CV) is connected (when **Pr.30** = "2"). • Check for the password lock with a setting of **Pr.296** = "0, 100".			
Corrective action	• Check the **Pr.30** setting and wiring. • The inverter may be damaged if the AC power supply is connected to the terminal R/L1, S/L2, or T/L3 when a high power factor converter is connected. Please contact your sales representative. • Set the switch on the plug-in option, which is for manufacturer setting, back to the initial setting. (Refer to the Instruction Manual of each option.) • To apply the password lock when installing a communication option, set **Pr.296** ≠ "0, 100". (Refer to page 171.)			

Operation panel indication	E.OP1	E. OP 1	FR-PU07	Option1 Fault
Name	Communication option fault			
Description	The inverter trips if a communication line error occurs in the communication option.			
Check point	• Check for an incorrect option function setting and operation. • Check that the plug-in option is plugged into the connector properly. • Check for a break in the communication cable. • Check that the terminating resistor is fitted properly.			
Corrective action	• Check the option function setting, etc. • Connect the plug-in option securely. • Check the connection of communication cable.			

Operation panel indication	E.16 to E.20	E. 16 to E. 20	FR-PU07	—
Name	User definition error by the PLC function			
Description	The protective function is activated by setting "16 to 20" in the special register SD1214 for the PLC function. The inverter trips when the protective function is activated. The protective function is activated when the PLC function is enabled. This protective function is not available in the initial setting (**Pr.414** = "0"). Any character string can be displayed on FR-LU08 or FR-PU07 by sequence programs.			
Check point	• Check if "16 to 20" is set in the special register SD1214.			
Corrective action	• Set a value other than "16 to 20" in the special register SD1214.			

Operation panel indication	E.PE	E. PE	FR-PU07	Corrupt Memory
Name	Parameter storage device fault (control circuit board)			
Description	The inverter trips if a fault occurs in the parameter stored. (EEPROM failure)			
Check point	Check for too many number of parameter write times.			
Corrective action	Please contact your sales representative. Set "1" in **Pr.342 Communication EEPROM write selection**(write to RAM) for the operation which requires frequent parameter writing via communication, etc. Note that writing to RAM goes back to the initial status at power OFF.			

Operation panel indication	E.PUE	E. PUE	FR-PU07	PU Leave Out
Name	PU disconnection			
Description	• The inverter trips if communication between the inverter and PU is suspended, e.g. the operation panel or the parameter unit is disconnected, when the disconnected PU disconnection function is valid in **Pr.75 Reset selection/disconnected PU detection/PU stop selection** . • The inverter trips if communication errors occurred consecutively for more than permissible number of retries when **Pr.121 Number of PU communication retries** ≠ "9999" during the RS-485 communication. • The inverter trips if communication is broken within the period of time set in **Pr.122 PU communication check time interval** during the RS-485 communication via the PU connector.			
Check point	• Check that the operation panel or the parameter unit is connected properly. • Check the **Pr.75** setting.			
Corrective action	Fit the operation panel or the parameter unit securely.			

Operation panel indication	E.RET	E. RET	FR-PU07	Retry No Over
Name	Retry count excess			
Description	The inverter trips if the operation cannot be resumed properly within the number of retries set in **Pr.67 Number of retries at fault occurrence**.			
Check point	Find the cause of the fault occurrence.			
Corrective action	Eliminate the cause of the error preceding this error indication.			

Operation panel indication	E.PE2	E. PE2	FR-PU07	PR storage alarm
Name	Parameter storage device faultParameter storage device fault (main circuit board)			
Description	The inverter trips if a fault occurs in the parameter stored. (EEPROM failure)			
Check point	————			
Corrective action	Please contact your sales representative.			

Operation panel indication	CPU	E. CPU	FR-PU07	CPU Fault
	E. 5	E. 5		Fault 5
	E. 6	E. 6		Fault 6
	E. 7	E. 7		Fault 7
Name	CPU fault			
Description	The inverter trips if the communication fault of the built-in CPU occurs.			
Check point	Check for devices producing excess electrical noises around the inverter.			
Corrective action	• Take measures against noises if there are devices producing excess electrical noises around the inverter. • Please contact your sales representative.			

Operation panel indication	E.CTE	E. CTE	FR-PU07	E.CTE
Name	Operation panel power supply short circuit/RS-485 terminals power supply short circuit			
Description	• When the power supply for the operation panel (PU connector) is shorted, the power output is shutoff and the inverter trips. The use of the operation panel (parameter unit) and the RS-485 communication via the PU connector are disabled. To reset, enter the RES signal from the terminal, reset via communication through the RS-485 terminals, or switch power OFF then ON again. • When the power supply for the RS-485 terminals are short circuited, this function shuts off the power output. At this time, communication from the RS-485 terminals cannot be made. To reset, use STOP RESET of the operation panel, enter the RES signal, or switch power OFF then ON again.			
Check point	• Check that the PU connector cable is not shorted. • Check that the RS-485 terminals are connected correctly.			
Corrective action	• Check PU and the cable. • Check the connection of the RS-485 terminals.			

Operation panel indication	E.P24	E. P24	FR-PU07	E.P24
Name	24 VDC power fault			
Description	When the 24 VDC power output from the PC terminal is shorted, this function shuts off the power output. At this time, all external contact inputs switch OFF. The inverter cannot be reset by entering the RES signal. To reset it, use the operation panel, or switch power OFF, then ON again.			
Check point	• Check for a short circuit in the PC terminal output. • Check that the 24 V external power supply voltage is correct.			
Corrective action	• Repair the short-circuited portion. • Supply the power at 24 V. (If the power at insufficient voltage is supplied to the 24V input circuit for a long time, the inverter internal circuit may heat up. Input power at correct voltage although it will not damage the inverter.)			

Operation panel indication	E.CDO	E. CdO	FR-PU07	OC detect level
Name	Abnormal output current detection			
Description	The inverter trips if the output current exceeds the **Pr.150 Output current detection level** setting. This functions is available when **Pr.167 Output current detection operation selection** is set to "1". When the initial value (**Pr.167** = "0") is set, this protective function is not available.			
Check point	Check the settings of **Pr.150, Pr.151 Output current detection signal delay time, Pr.166 Output current detection signal retention time, and Pr.167**. (Refer to page 296.)			

Operation panel indication	E.IOH	E. IOH	FR-PU07	Inrush overheat
Name	Inrush current limit circuit fault (Standard models only)			
Description	The inverter trips when the resistor of the inrush current limit circuit is overheated. The inrush current limit circuit failure			
Check point	• Check that frequent power ON/OFF is not repeated. • Check if the input side fuse (5A) in the power supply circuit of the inrush current limit circuit contactor (FR-F840-03250(132K) or higher) is blown. • Check that the power supply circuit of inrush current limit circuit contactor is not damaged.			
Corrective action	Configure a circuit where frequent power ON/OFF is not repeated. If the situation does not improve after taking the above measure, please contact your sales representative.			

Operation panel indication	E.SER		FR-PU07	VFD Comm error
Name	Communication fault (inverter)			
Description	The inverter trips when communication error occurs consecutively for the permissible number of retries or more when **Pr.335 RS-485 communication retry count** ≠ "9999" during RS-485 communication from the RS-485 terminals. The inverter also trips if communication is broken for the period of time set in **Pr.336 RS-485 communication check time interval**.			
Check point	Check the RS-485 terminal wiring.			
Corrective action	Perform wiring of the RS-485 terminals properly.			

Operation panel indication	E.AIE		FR-PU07	Analog in error
Name	Analog input fault			
Description	The inverter trips when a 30 mA or higher current or a 7.5 V or higher voltage is input to terminal 2 while the current input is selected by **Pr.73 Analog input selection**, or to terminal 4 while the current input is selected by **Pr.267 Terminal 4 input selection**.			
Check point	Check the **Pr.73**, **Pr.267**, and the voltage/current input switch settings.(Refer to page 306)			
Corrective action	Either give a current less than 30 mA, or set **Pr.73**, **Pr.267**, and the voltage/current input switch to the voltage input and input a voltage.			

Operation panel indication	E.USB		FR-PU07	USB comm error
Name	USB communication fault			
Description	The inverter trips when the communication is cut off for the time set in **Pr.548 USB communication check time interval**.			
Check point	• Check that the USB communication cable is connected securely.			
Corrective action	• Check the **Pr.548** setting. • Connect the USB communication cable securely. • Increase the **Pr.548** setting or set "9999." (Refer to page 493.)			

Operation panel indication	E.SAF		FR-PU07	E.SAF Fault
Name	Safety circuit fault			
Description	• The inverter trips when a safety circuit fault occurs. • The inverter trips if the either of the wire between S1 and SIC or S2 and SIC becomes non-conductive while using the safety stop function. • When not using the safety stop function, the inverter trips when the shorting wire between terminals S1 and PC or across S2 and PC is disconnected.			
Check point	• Check that the safety relay module or the connection has no fault when using the safety stop function. • Check if the shorting wire between S1 and PC or between S2 and PC is disconnected when not using the safety stop function.			
Corrective action	• When using the safety stop function, check that wiring of terminal S1, S2 and SIC is correct and the safety stop input signal source such as a safety relay module is operating properly. Refer to the Safety stop function instruction manual for causes and countermeasures. (Please contact your sales representative for the manual.) • When not using the safety stop function, short across terminals S1 and PC and across S2 and PC with shorting wires. (Refer to page 58.)			

Operation panel indication	E.PBT		FR-PU07	Fault
	E.13	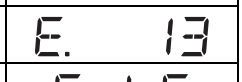		Fault 13
	E.BE			Br.Cct.Fault
Name	Opposite rotation deceleration fault			
Description	The inverter trips when an internal circuit fault occurs.			
Corrective action	Please contact your sales representative.			

Operation panel indication	E.OS	E. 05	FR-PU07	E.OS
Name	Overspeed occurrence			
Description	The inverter trips when the motor speed exceeds the **Pr.374 Overspeed detection level** under PM motor control. This protective function is not available in the initial status.			
Check point	• Check that the **Pr.374** setting is correct.			
Corrective action	• Set the **Pr.374** correctly.			

Operation panel indication	E.LCI	E. LCI	FR-PU07	Fault
Name	4 mA input fault			
Description	The inverter trips when the analog input current is 2 mA or less for the time set in **Pr.778 4 mA input check filter**. This function is available when **Pr.573 4 mA input check selection** = "2 or 3". (Refer to page 325.) This function is not available in the initial status.			
Check point	• Check for a break in the wiring for the analog current input. • Check that the **Pr.778** setting is not too short.			
Corrective action	• Check the wiring for the analog current input. • Set the **Pr.778** setting larger.			

Operation panel indication	E.PCH	E. PCH	FR-PU07	Fault
Name	Pre-charge fault			
Description	• The inverter trips when the pre-charge time exceeds **Pr.764 Pre-charge time limit**. • The inverter trips when the measured value exceeds **Pr.763 Pre-charge upper detection level** during pre-charging. • This function is available when **Pr.764 and Pr.763** are set. This protective function is not available in the initial status.			
Check point	• Check that the **Pr.764** setting is not too short. • Check that the **Pr.763** setting is not too small. • Check that the **Pr.127 PID control automatic switchover frequency** setting is not too low. • Check for a break in the connection to the pump.			
Corrective action	• Set the **Pr.764** setting longer. • Set the **Pr.763** setting larger. • Set the **Pr.127** setting higher. • Check the connection to the pump.			

Operation panel indication	E.PID	E. PId	FR-PU07	Fault PID Signal Error
Name	PID signal fault			
Description	The inverter trips if the measured value exceeds the PID upper limit or PID lower limit parameter setting, or the absolute deviation value exceeds the PID deviation parameter setting during PID control. Set this function in **Pr.131 PID upper limit, Pr.132 PID lower limit, Pr.553 PID deviation limit, and Pr.554 PID signal operation selection**. (Refer to page 378.) This protective function is not available in the initial status.			
Check point	• Check the meter for a failure or break. • Check that the parameter settings are correct.			
Corrective action	• Check that the meter has no failure or break. • Set the parameters correctly.			

Operation panel indication	E. 1 to E. 3		FR-PU07	Fault 1 to Fault 3
Name	Option fault			
Description	The inverter trips when a contact fault is found between the inverter and the plug-in option, or when the communication option is not connected to the connector 1. Appears when the switch for manufacturer setting of the plug-in option is changed.			
Check point	• Check that the plug-in option is plugged into the connector properly. (1 to 3 indicate connector numbers for connection of options.) • Check for excessive noise around the inverter. • Check if the communication option is connected to the connector 2 or 3.			
Corrective action	• Connect the plug-in option securely. • Take measures against noises if there are devices producing excess electrical noises around the inverter. If the situation does not improve after taking the above measure, please contact your sales representative. • Connect the communication option to the connector 1. • Set the switch on the plug-in option, which is for manufacturer setting, back to the initial setting. (Refer to the Instruction Manual of each option.)			

NOTE

- If protective functions with indication of "Fault" are activated when using the FR-PU07, "ERR" appears in the faults history of FR-PU07.
- If faults other than the above appear, contact your sales representative.

6.6 Check first when you have a trouble

NOTE

- If the cause is still unknown after every check, it is recommended to initialize the parameters, set the required parameter values and check again.

6.6.1 Motor does not start

Check points	Possible cause	Countermeasure	Refer to page
Main Circuit	Appropriate power supply voltage is not applied. (Operation panel display is not provided.)	Power on a molded case circuit breaker (MCCB), an earth leakage circuit breaker (ELB), or a magnetic contactor (MC).	—
		Check for the decreased input voltage, input phase loss, and wiring.	—
		If only the control power is ON when using a separate power source for the control circuit, turn ON the main circuit power.	55
	Motor is not connected properly.	Check the wiring between the inverter and the motor. If the electronic bypass function is active, check the wiring of the magnetic contactor (MC) between the inverter and the motor.	38
	The jumper across P/+ to P1 is disconnected. A DC reactor (FR-HEL) is not connected.	Securely fit a jumper across P/+ and P1. When using a DC reactor (FR-HEL), remove the jumper across P/+ to P1, and then connect the DC reactor. Connect the DC reactor securely when required according to the capacity.	38, 69
Input signal	Start signal is not input.	Check the start command source, and input a start signal. PU operation mode: FWD / REV External operation mode: STF/STR signal	203
	Both the forward and reverse rotation start signals (STF, STR) are input simultaneously.	Turn ON only one of the forward and reverse rotation start signals (STF or STR). When the STF and STR signals are turned ON simultaneously in the initial setting, a stop command is given.	46
	Frequency command is zero. (FWD or REV LED on the operation panel is flickering.)	Check the frequency command source and enter a frequency command.	203
	AU signal is not ON when terminal 4 is used for frequency setting. (FWD or REV LED on the operation panel is flickering.)	Turn ON the AU signal. Turning ON the AU signal activates terminal 4 input.	306
	Output stop signal (MRS) or reset signal (RES) is ON. (FWD or REV LED on the operation panel is flickering.)	Turn MRS or RES signal OFF. Inverter starts the operation with a given start command and a frequency command after turning OFF MRS or RES signal. Before turning OFF, ensure the safety.	46
	CS signal is OFF while the automatic restart after instantaneous power failure function is selected (**Pr.57 Restart coasting time** ≠ 9999). (FWD or REV LED on the operation panel is flickering.)	Turn ON the automatic restart after instantaneous power failure/flying start (CS) signal. When the CS signal is assigned to an input terminal, automatic restart operation is enabled when the CS signal is turned ON.	414
	Jumper connector of sink - source is incorrectly selected. (FWD or REV LED on the operation panel is flickering.)	Check that the control logic switchover jumper connector is correctly installed. If it is not installed correctly, input signal is not recognized.	50
	Voltage/current input switch is not correctly set for analog input signal (0 to 5 V/0 to 10 V, 4 to 20 mA). (FWD or REV LED on the operation panel is flickering.)	Set **Pr.73 Analog input selection, Pr.267 Terminal 4 input selection**, and a voltage/current input switch correctly, then input an analog signal in accordance with the setting.	306
	STOP RESET was pressed. (Operation panel indication is PS (PS).)	During the External operation mode, check the method of restarting from a STOP RESET input stop from PU.	163, 539
	For the separated converter type, terminals RDA and SE of the converter unit are not connected to terminals MRS (X10 signal) and SD (PC for source logic) of the inverter respectively.	Check for the wiring.	Refer to the Instruction Manual (Hardware) of the FR-F802.
	Two-wire or three-wire type connection is incorrect.	Check the wiring. Use the Start self-holding selection (STP (STOP)) signal when the three-wire type is used.	335

Check points	Possible cause	Countermeasure	Refer to page
Parameter Setting	Under V/F control, **Pr.0 Torque boost** setting is improper.	Increase the **Pr.0** setting by 0.5% increments while observing the rotation of a motor. If that makes no difference, decrease the setting.	496
	Pr.78 Reverse rotation prevention selection is set.	Check the **Pr.78** setting. Set **Pr.78** when you want to limit the motor rotation to only one direction.	217
	Pr.79 Operation mode selection setting is incorrect.	Select the operation mode which corresponds with input methods of start command and frequency command.	200
	Bias and gain **(calibration parameter C2 to C7)** settings are improper.	Check the bias and gain **(calibration parameter C2 to C7)** settings.	314
	Pr.13 Starting frequency setting is greater than the running frequency.	Set running frequency higher than **Pr.13**. The inverter does not start if the frequency setting signal is less than the value set in **Pr.13**.	197, 198
	Frequency settings of various running frequency (such as multi-speed operation) are zero. Especially, **Pr.1 Maximum frequency** is zero.	Set the frequency command according to the application. Set **Pr.1** higher than the actual frequency used.	222, 245
	Pr.15 Jog frequency is lower than **Pr.13 Starting frequency** for JOG operation.	Set **Pr.15** higher than **Pr.13**.	197, 198, 221
	Operation mode and a writing device do not correspond.	Check **Pr.79 Operation mode selection, Pr.338 Communication operation command source, Pr.339 Communication speed command source, Pr.550 NET mode operation command source selection** and **Pr.551 PU mode operation command source selection**, and select an operation mode suitable for the purpose.	200, 210
	Start signal operation selection is set by **Pr.250 Stop selection**.	Check the **Pr.250** setting and the connection of STF and STR signals.	335
	The motor has decelerated to a stop when power failure deceleration stop function is selected.	When power is restored, ensure the safety, and turn OFF the start signal once, then turn ON again to restart. When **Pr.261 Power failure stop selection** = "2 or 12", the motor automatically restarts after the power is restored.	426
	Performing auto tuning.	When offline auto tuning ends, press STOP RESET of the operation panel for the PU operation. For the External operation, turn OFF the start signal (STF or STR). This operation resets the offline auto tuning, and the PU's monitor display returns to the normal indication. (Without this operation, next operation cannot be started.)	341, 423
	The automatic restart after instantaneous power failure function or power failure stop function has been activated. (Performing overload operation during input phase loss may cause voltage insufficiency, and that may result in detection of power failure.)	Set **Pr.872 Input phase loss protection selection** ="1" (input phase failure protection active). Disable the automatic restart after instantaneous power failure function and power failure stop function. Reduce the load. Increase the acceleration time if the function was activated during acceleration.	235, 414, 420, 426
	The motor test operation is selected under PM motor control.	Check the **Pr.800 Control method selection** setting.	143
	When the FR-HC2, FR-CV, or FR-CC2 is used, the input logic setting of the X10 signal is incorrect.	Set **Pr.599**="0" (initial value for standard models) to use the X10 signal with the NO contact input specification, and **Pr.599**="1" (initial value for separated converter types) to use the X10 signal with the NC contact input specification.	508
Load	Load is too heavy.	Reduce the load.	—
	Shaft is locked.	Inspect the machine (motor).	—

6.6.2 Motor or machine is making abnormal acoustic noise

Check points	Possible cause	Countermeasure	Refer to page
Input signal	Disturbance due to EMI when frequency or torque command is given from analog input (terminal 1, 2, 4).	Take countermeasures against EMI.	72
Parameter Setting		Increase the **Pr.74 Input filter time constant** if steady operation cannot be performed due to EMI.	313
Parameter Setting	No carrier frequency noises (metallic noises) are generated.	In the initial setting, **Pr.240 Soft-PWM operation selection** is enabled to change motor noise to an unoffending complex tone. Therefore, no carrier frequency noises (metallic noises) are generated. Set **Pr.240** = "0" to disable this function.	179
	The motor noise increases due to activation of the carrier frequency automatic reduction function when the motor is driven overloaded.	Reduce the load. Disable the automatic reduction function by setting **Pr.260 PWM frequency automatic switchover** = "0".	179
	Resonance occurs. (output frequency)	Set **Pr.31 to Pr.36, Pr.552 (Frequency jump)**. When it is desired to avoid resonance attributable to the natural frequency of a mechanical system, these parameters allow resonant frequencies to be jumped.	246
	Resonance occurs. (carrier frequency)	Change **Pr.72 PWM frequency selection** setting. Changing the PWM carrier frequency produces an effect on avoiding the resonance frequency of a mechanical system or a motor.	179
	Auto tuning is not performed under Advanced magnetic flux vector control.	Perform offline auto tuning.	341
	Gain adjustment during PID control is insufficient.	To stabilize the measured value, change the proportional band (**Pr.129**) to a larger value, the integral time (**Pr.130**) to a slightly longer time, and the differential time (**Pr.134**) to a slightly shorter time. Check the calibration of set point and measured value.	378
	The gain is too high under PM motor control.	During speed control, check the setting of **Pr.820 Speed control P gain 2**.	154
		During torque control, check the setting of **Pr.824 Torque control P gain 2**.	154
Others	Mechanical looseness	Adjust machine/equipment so that there is no mechanical looseness.	—
	Contact the motor manufacturer.		
Motor	Operating with output phase loss	Check the motor wiring.	—

6.6.3 Inverter generates abnormal noise

Check points	Possible cause	Countermeasure	Refer to page
Fan	Fan cover was not correctly installed when a cooling fan was replaced.	Install a fan cover correctly.	567

6.6.4 Motor generates heat abnormally

Check points	Possible cause	Countermeasure	Refer to page
Motor	Motor fan is not working (Dust is accumulated.)	Clean the motor fan. Improve the environment.	—
	Phase to phase insulation of the motor is insufficient.	Check the insulation of the motor.	—
Main Circuit	The inverter output voltage (U, V, W) are unbalanced.	Check the output voltage of the inverter. Check the insulation of the motor.	571
Parameter Setting	**Pr.71 Applied motor** setting is incorrect.	Check the **Pr.71 Applied motor** setting.	337
—	Motor current is large.	Refer to "6.6.11 Motor current is too large".	557

6.6.5 Motor rotates in the opposite direction

Check points	Possible cause	Countermeasure	Refer to page
Main Circuit	Phase sequence of output terminals U, V and W is incorrect.	Connect phase sequence of the output cables (terminal U, V, W) to the motor correctly.	38
Input signal	The start signals (forward rotation, reverse rotation) are connected improperly.	Check the wiring. (STF: forward rotation, STR: reverse rotation)	46, 335
	The polarity of the frequency command is negative during the polarity reversible operation set by **Pr.73 Analog input selection** .	Check the polarity of the frequency command.	306

6.6.6 Speed greatly differs from the setting

Check points	Possible cause	Countermeasure	Refer to page
Input signal	Frequency setting signal is incorrectly input.	Measure the input signal level.	—
	The input signal lines are affected by external EMI.	Take countermeasures against EMI, such as using shielded wires for input signal lines.	74
Parameter Setting	**Pr.1 Maximum frequency, Pr.2 Minimum frequency, Pr.18 High speed maximum frequency, and calibration parameter C2 to C7** settings are improper.	Check the settings of **Pr.1, Pr.2, and Pr.18**.	245
		Check the **calibration parameter C2 to C7** settings.	314
	Pr.31 to Pr.36, Pr.552 (frequency jump) settings are improper.	Narrow down the range of frequency jump.	246
Load	Stall prevention function is activated due to a heavy load.	Reduce the load weight.	—
Parameter Setting		Set **Pr.22 Stall prevention operation level** higher according to the load. (If **Pr.22** is set too high, an overcurrent trip (E.OC[]) is likely to occur.)	248
Motor		Check the capacities of the inverter and the motor.	—

6.6.7 Acceleration/deceleration is not smooth

Check points	Possible cause	Countermeasure	Refer to page
Parameter Setting	Acceleration/deceleration time is too short.	Increase the acceleration/deceleration time.	187
	Torque boost **(Pr.0, Pr.46)** setting is improper under V/F control, so the stall prevention function is activated.	Increase/decrease the **Pr.0 Torque boost** setting value by 0.5% increments so that stall prevention does not occur.	496
	The base frequency does not match the motor characteristics.	Under V/F control, set **Pr.3 Base frequency, Pr.47 Second V/F (base frequency)**.	497
		Under Advanced magnetic flux vector control or PM motor control, set **Pr.84 Rated motor frequency**.	143
	Regeneration avoidance operation is performed	If the frequency becomes unstable during regeneration avoidance operation, decrease the setting of **Pr.886 Regeneration avoidance voltage gain**.	514
Load	Stall prevention (torque limit) function is activated due to a heavy load.	Reduce the load weight.	—
Parameter Setting		Set **Pr.22 Stall prevention operation level** higher according to the load. (If **Pr.22** is set too high, an overcurrent trip (E.OC[]) is likely to occur.)	248
Motor		Check the capacities of the inverter and the motor.	—

6.6.8 Speed varies during operation

Under Advanced magnetic flux vector control, the output frequency varies between 0 and 2 Hz as the load fluctuates. This is a normal operation and not a fault.

Check points	Possible cause	Countermeasure	Refer to page
Load	Load varies during an operation.	Select Advanced magnetic flux vector control.	143
Input signal	Frequency setting signal is varying.	Check the frequency setting signal.	—
	The frequency setting signal is affected by EMI.	Set filter to the analog input terminal using **Pr.74 Input filter time constant** , **Pr.822 Speed setting filter 1**.	313
		Take countermeasures against EMI, such as using shielded wires for input signal lines.	74
	Malfunction is occurring due to the undesirable current generated when the transistor output unit is connected.	Use terminal PC (terminal SD when source logic) as a common terminal to prevent a malfunction caused by undesirable current.	51
	Multi-speed command signal is chattering.	Take countermeasures to suppress chattering.	—
Parameter Setting	Fluctuation of power supply voltage is too large.	Under V/F control, change the **Pr.19 Base frequency voltage** setting (approximately by 3%).	497
	Pr.80 Motor capacity and **Pr.81 Number of motor poles** are not appropriate for the motor capacity under Advanced magnetic flux vector control, or PM motor control.	Check the settings of **Pr.80** and **Pr.81**.	143
	Wiring length exceeds 30 m when Advanced magnetic flux vector control, or PM motor control is selected.	Perform offline auto tuning.	341
	Under V/F control, wiring is too long and a voltage drop occurs.	In the low-speed range, set 0.5% in **Pr.0 Torque boost**.	496
		Change the control method to Advanced magnetic flux vector control.	143
	Hunting occurs by the generated vibration, for example, when structural rigidity at load side is insufficient.	Disable automatic control functions, such as the energy saving operation, fast-response current limit operation, regeneration avoidance function, Advanced magnetic flux vector control, stall prevention, and online auto tuning. Under PID control, set smaller values to **Pr.129 PID proportional band** and **Pr.130 PID integral time**. Adjust so that the control gain decreases and the level of safety increases.	—
		Change **Pr.72 PWM frequency selection** setting.	179

6.6.9 Operation mode is not changed properly

Check points	Possible cause	Countermeasure	Refer to page
Input signal	Start signal (STF or STR) is ON.	Check that the STF and STR signals are off. When either is ON, the operation mode cannot be changed.	46, 335
Parameter Setting	**Pr.79 Operation mode selection** setting is improper.	When the **Pr.79** is set to "0 (initial value)", the operation mode is the External operation mode at power ON. To switch to the PU operation mode, press PU EXT on the operation panel (press PU on the parameter unit (FR-PU07)). At other settings (1 to 4, 6, 7), the operation mode is limited accordingly.	200
	Operation mode and a writing device do not correspond.	Check **Pr.79 Operation mode selection, Pr.338 Communication operation command source, Pr.339 Communication speed command source, Pr.550 NET mode operation command source selection** and **Pr.551 PU mode operation command source selection**, and select an operation mode suitable for the purpose.	200, 210

6.6.10 Operation panel (FR-DU08) display is not operating

Check points	Possible cause	Countermeasure	Refer to page
Main Circuit Control Circuit	Power is not input.	Input the power.	33
Front cover	Operation panel is not properly connected to the inverter.	Check if the inverter front cover is installed securely.	22

6.6.11 Motor current is too large

Check points	Possible cause	Countermeasure	Refer to page
Parameter Setting	Torque boost **(Pr.0, Pr.46)** setting is improper under V/F control, so the stall prevention function is activated.	Increase/decrease the **Pr.0 Torque boost** setting value by 0.5% increments so that stall prevention does not occur.	496
	V/F pattern is improper when V/F control is performed. (**Pr.3, Pr.14, Pr.19**)	Set rated frequency of the motor to **Pr.3 Base frequency**. Use **Pr.19 Base frequency voltage** to set the base voltage (for example, rated motor voltage).	497
		Change **Pr.14 Load pattern selection**according to the load characteristic.	499
	Stall prevention function is activated due to a heavy load.	Reduce the load weight.	—
		Set **Pr.22 Stall prevention operation level** higher according to the load. (If **Pr.22** is set too high, an overcurrent trip (E.OC[]) is likely to occur.)	248
		Check the capacities of the inverter and the motor.	—
	Offline auto tuning is not performed under Advanced magnetic flux vector control.	Perform offline auto tuning.	341
	When PM motor control is selected for a PM motor other than MM-EFS/MM-THE4, and offline auto tuning is not performed.	Perform offline auto tuning for a PM motor.	351

6.6.12 Speed does not accelerate

Check points	Possible cause	Countermeasure	Refer to page
Input signal	Start command and frequency command are chattering.	Check if the start command and the frequency command are correct.	—
	The wiring length used for analog frequency command is too long, and it is causing a voltage (current) drop.	Perform Analog input bias/gain calibration.	314
	The input signal lines are affected by external EMI.	Take countermeasures against EMI, such as using shielded wires for input signal lines.	74
Parameter Setting	**Pr.1 Maximum frequency, Pr.2 Minimum frequency, Pr.18 High speed maximum frequency, and calibration parameter C2 to C7** settings are improper.	Check the settings of **Pr.1 and Pr.2** and set **Pr.18**.	245
		Check the **calibration parameter C2 to C7** settings.	314
	The maximum voltage (current) input value is not set during the External operation. **(Pr.125, Pr.126, Pr.18)**	Check the settings of **Pr.125 Terminal 2 frequency setting gain frequency** and **Pr.126 Terminal 4 frequency setting gain frequency**. To operate at 120 Hz or higher, set **Pr.18 High speed maximum frequency**.	245, 314
	Torque boost **(Pr.0, Pr.46)** setting is improper under V/F control, so the stall prevention function is activated.	Increase/decrease the **Pr.0 Torque boost** setting value by 0.5% increments so that stall prevention does not occur.	496
	V/F pattern is improper when V/F control is performed. (**Pr.3, Pr.14, Pr.19**)	Set rated frequency of the motor to **Pr.3 Base frequency**. Use **Pr.19 Base frequency voltage** to set the base voltage (for example, rated motor voltage).	497
		Change **Pr.14 Load pattern selection** according to the load characteristic.	499
	Stall prevention function is activated due to a heavy load.	Reduce the load weight.	—
		Set **Pr.22 Stall prevention operation level** higher according to the load. (If **Pr.22** is set too high, an overcurrent trip (E.OC[]) is likely to occur.)	248
		Check the capacities of the inverter and the motor.	—
	Auto tuning is not performed under Advanced magnetic flux vector control.	Perform offline auto tuning.	341
	The setting of pulse train input is improper.	Check the specification of the pulse generator (open collector output or complementary output) and check the adjustment of the pulse train and frequency (**Pr.385 Frequency for zero input pulse** and **Pr.386 Frequency for maximum input pulse**).	218
	During PID control, output frequency is automatically controlled to make measured value = set point.		378

6.6.13 Unable to write parameter setting

Check points	Possible cause	Countermeasure	Refer to page
Input signal	Operation is being performed (signal STF or STR is ON).	Stop the operation. When **Pr.77 Parameter write selection** = "0" (initial value), write is enabled only during a stop.	169
Parameter Setting	You are attempting to set the parameter in the External operation mode.	Choose the PU operation mode. Or, set **Pr.77 Parameter write selection** = "2" to enable parameter write regardless of the operation mode.	169, 200
	Parameter write is disabled by the **Pr.77 Parameter write selection** setting.	Check the **Pr.77** setting.	169
	Key lock mode is enabled by the **Pr.161 Frequency setting/key lock operation selection** setting.	Check the **Pr.161** setting.	166
	Operation mode and a writing device do not correspond.	Check **Pr.79, Pr.338, Pr.339, Pr.550** and **Pr.551**, and select an operation mode suitable for the purpose.	200, 210
	Pr.72 PWM frequency selection was attempted to be set to "25". Alternatively, PM motor control was attempted while **Pr.72** = "25".	**Pr.72** = "25" cannot be set under PM motor control. (A sine wave filter (MT-BSL/BSC) cannot be used under PM motor control.)	179

6.6.14 Power lamp is not lit

Check points	Possible cause	Countermeasure	Refer to page
Main Circuit Control Circuit	Wiring or installation is improper.	Check for the wiring and the installation. Power lamp is lit when power is supplied to the control circuit (R1/L11, S1/L21).	37

MEMO

7 PRECAUTIONS FOR MAINTENANCE AND INSPECTION

This chapter explains the "PRECAUTIONS FOR MAINTENANCE AND INSPECTION" for this product.
Always read the instructions before using the equipment.
For the "PRECAUTIONS FOR MAINTENANCE AND INSPECTION" of the separated converter type, refer to the FR-F802 (Separated Converter Type) Instruction Manual (Hardware) [IB-0600550ENG].

7.1 Inspection item.....562
7.2 Measurement of main circuit voltages, currents and powers...571

The inverter is a static unit mainly consisting of semiconductor devices. Daily inspection must be performed to prevent any fault from occurring due to the adverse effects of the operating environment, such as temperature, humidity, dust, dirt and vibration, changes in the parts with time, service life, and other factors.

•Precautions for maintenance and inspection

When accessing the inverter for inspection, wait for at least 10 minutes after the power supply has been switched OFF, and then make sure that the voltage across the main circuit terminals P/+ and N/- of the inverter is not more than 30 VDC using a tester, etc.

7.1 Inspection item

7.1.1 Daily inspection

Basically, check for the following faults during operation.

- Motor operation fault
- Improper installation environment
- Cooling system fault
- Abnormal vibration, abnormal noise
- Abnormal overheat, discoloration

7.1.2 Periodic inspection

Check the areas inaccessible during operation and requiring periodic inspection.
Consult us for periodic inspection.

- Check and clean the cooling system. ..... Clean the air filter, etc.
- Check the tightening and retighten. ..... The screws and bolts may become loose due to vibration, temperature changes, etc. Check and tighten them.
  Tighten them according to the specified tightening torque. (Refer to page 41.)
- Check the conductors and insulating materials for corrosion and damage.
- Measure the insulation resistance.
- Check and change the cooling fan and relay.

NOTE

- When using the safety stop function, periodic inspection is required to confirm that safety function of the safety system operates correctly.
  For more details, refer to the Safety stop function instruction manual (BCN-A23228-001).

7.1.3 Daily and periodic inspection

Area of inspection	Inspection item	Description	Inspection interval		Corrective action at fault occurrence	Check by the user
			Daily	Periodic *3		
General	Surrounding environment	Check the surrounding air temperature, humidity, dirt, corrosive gas, oil mist, etc.	○		Improve the environment.	
	Overall unit	Check for unusual vibration and noise.	○		Check fault location and retighten.	
		Check for dirt, oil, and other foreign material. *1	○		Clean.	
	Power supply voltage	Check that the main circuit voltages and control voltages are normal. *2	○		Inspect the power supply.	
Main circuit	General	(1)Check with megger (across main circuit terminals and earth (ground) terminal).		○	Contact the manufacturer.	
		(2)Check for loose screws and bolts.		○	Retighten.	
		(3)Check for overheat traces on the parts.		○	Contact the manufacturer.	
		(4)Check for stain.		○	Clean.	
	Conductors, cables	(1)Check conductors for distortion.		○	Contact the manufacturer.	
		(2)Check cable sheaths for breakage and deterioration (crack, discoloration, etc.).		○	Contact the manufacturer.	
	Transformer/ reactor	Check for unusual odor and abnormal increase of whining sound.	○		Stop the equipment and contact the manufacturer.	
	Terminal block	Check for a damage.		○	Stop the equipment and contact the manufacturer.	
	Smoothing aluminum electrolytic capacitor	(1)Check for liquid leakage.		○	Contact the manufacturer.	
		(2)Check for safety valve projection and bulge.		○	Contact the manufacturer.	
		(3)Visual check and judge by the life check of the main circuit capacitor. (Refer to page 566.)		○		
	Relay/contactor	Check that the operation is normal and no chattering sound is heard.		○	Contact the manufacturer.	
Control circuit, protective circuit	Operation check	(1)Check that the output voltages across phases are balanced while operating the inverter alone.		○	Contact the manufacturer.	
		(2)Check that no fault is found in protective and display circuits in a sequence protective operation test.		○	Contact the manufacturer.	
	Components check: Overall	(1)Check for unusual odor and discoloration.		○	Stop the equipment and contact the manufacturer.	
		(2)Check for serious rust development.		○	Contact the manufacturer.	
	Components check: Aluminum electrolytic capacitor	(1)Check for liquid leakage in a capacitor and deformation trace.		○	Contact the manufacturer.	
		(2)Visual check and judge by the life check of the control circuit capacitor. (Refer to page 566.)		○		
Cooling system	Cooling fan	(1)Check for unusual vibration and noise.	○		Replace the fan.	
		(2)Check for loose screws and bolts.		○	Fix with the fan cover fixing screws	
		(3)Check for stain.		○	Clean.	
	Heatsink	(1)Check for clogging.		○	Clean.	
		(2)Check for stain.		○	Clean.	
Display	Indication	(1)Check that display is normal.	○		Contact the manufacturer.	
		(2)Check for stain.		○	Clean.	
	Meter	Check that reading is normal.	○		Stop the equipment and contact the manufacturer.	

Inspection item

Area of inspection	Inspection item	Description	Inspection interval		Corrective action at fault occurrence	Check by the user
			Daily	Periodic *3		
Load motor	Operation check	Check for vibration and abnormal increase in operation noise.	o		Stop the equipment and contact the manufacturer.	

*1 Oil component of the heat dissipation grease used inside the inverter may leak out. The oil component, however, is not flammable, corrosive, nor conductive and is not harmful to humans. Wipe off such oil component.

*2 It is recommended to install a voltage monitoring device for checking the voltage of the power supplied to the inverter.

*3 One to two years of periodic inspection cycle is recommended. However, it differs according to the installation environment. Consult us for periodic inspection.

NOTE

- Continuous use of a leaked, deformed, or degraded smoothing aluminum electrolytic capacitor (as shown in the table above) may lead to a burst, breakage or fire. Replace such a capacitor without delay.

7.1.4 Checking the inverter and converter modules

◆Preparation

- Disconnect the external power supply cables (R/L1, S/L2, T/L3) and motor cables (U, V, W).
- Prepare a tester. (For the resistance measurement, use the 100 Ω range.)

◆Checking method

Change the polarity of the tester alternately at the inverter terminals R/L1, S/L2, T/L3, U, V, W, P/+, and N/- and check the electric continuity.

NOTE

- Before measurement, check that the smoothing capacitor is discharged.
- At the time of electric discontinuity, the measured value is almost ∞. When there is an instantaneous electric continuity, due to the smoothing capacitor, the tester may not indicate ∞. At the time of electric continuity, the measured value is several Ω to several tens of Ω. If all measured values are almost the same, although these values are not constant depending on the module type and tester type, the modules are without fault.

◆Module device numbers and terminals to be checked

		Tester polarity ⊕	Tester polarity ⊖	Result		Tester polarity ⊕	Tester polarity ⊖	Result
Converter module	D1	R/L1	P/+	Discontinuity	D4	R/L1	N/-	Continuity
		P/+	R/L1	Continuity		N/-	R/L1	Discontinuity
	D2	S/L2	P/+	Discontinuity	D5	S/L2	N/-	Continuity
		P/+	S/L2	Continuity		N/-	S/L2	Discontinuity
	D3	T/L3	P/+	Discontinuity	D6	T/L3	N/-	Continuity
		P/+	T/L3	Continuity		N/-	T/L3	Discontinuity
Inverter module	TR1	U	P/+	Discontinuity	TR4	U	N/-	Continuity
		P/+	U	Continuity		N/-	U	Discontinuity
	TR3	V	P/+	Discontinuity	TR6	V	N/-	Continuity
		P/+	V	Continuity		N/-	V	Discontinuity
	TR5	W	P/+	Discontinuity	TR2	W	N/-	Continuity
		P/+	W	Continuity		N/-	W	Discontinuity

(Assumes the use of an analog meter.)

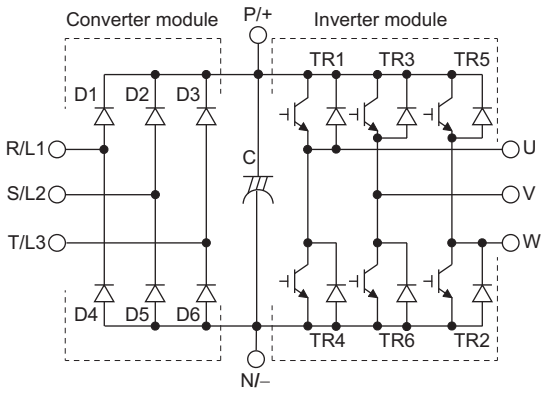

7.1.5 Cleaning

Always run the inverter in a clean status.

When cleaning the inverter, gently wipe dirty areas with a soft cloth immersed in neutral detergent or ethanol.

NOTE

- Do not use solvent, such as acetone, benzene, toluene and alcohol, as these will cause the inverter surface paint to peel off.
- The display, etc. of the operation panel and the parameter unit are vulnerable to detergent and alcohol. Therefore, avoid using them for cleaning.

7.1.6 Replacement of parts

The inverter consists of many electronic parts such as semiconductor devices.
The following parts may deteriorate with age because of their structures or physical characteristics, leading to reduced performance or fault of the inverter. For preventive maintenance, the parts must be replaced periodically.
Use the life check function as a guidance of parts replacement.

Part name	Estimated lifespan*1	Description
Cooling fan	10 years	Replace (as required)
Main circuit smoothing capacitor	10 years*2	Replace (as required)
On-board smoothing capacitor	10 years*2	Replace the board (as required)
Relays	—	As required
Main circuit fuse (FR-F840-04320(185K) or higher)	10 years	Replace the fuse (as required)

*1 Estimated lifespan for when the yearly average surrounding air temperature is 40°C. (without corrosive gas, flammable gas, oil mist, dust and dirt etc.)
*2 Output current: 80% of the inverter rating

NOTE

- For parts replacement, contact the nearest Mitsubishi FA center.

◆Displaying the life of the inverter parts

The inverter diagnoses the main circuit capacitor, control circuit capacitor, cooling fan, and inrush current limit circuit by itself and estimates their lives.
The self-diagnostic warning is output when the life span of each part is near its end. It gives an indication of replacement time.
The life warning output can be used as a guideline for life judgment.

Parts	Judgment level
Main circuit capacitor	85% of the initial capacity
Control circuit capacitor	Estimated remaining life 10%
Inrush current limit circuit	Estimated remaining life 10% (Power ON: 100,000 times left)
Cooling fan	Less than 50% of the specified speed.*1

*1 Initial values differ according to the inverter capacity (Refer to page 183 for details.)

NOTE

- Refer to page 180 to perform the life check of the inverter parts.

◆Replacement procedure of the cooling fan

The replacement interval of the cooling fan used for cooling the parts generating heat such as the main circuit semiconductor is greatly affected by the surrounding air temperature. When unusual noise and/or vibration are noticed during inspection, the cooling fan must be replaced immediately.

◆Removal FR-F820-00105(2.2K) to 04750(110K), FR-F840-00083(3.7K) to 03610(160K))

1) Push the hooks from above and remove the fan cover.

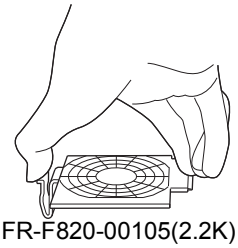

FR-F820-00105(2.2K) to 00250(5.5K)
FR-F840-00083(3.7K), 00126(5.5K)

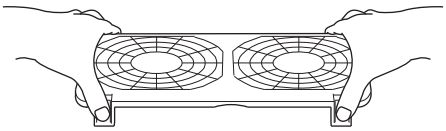

FR-F820-00340(7.5K) to 01540(37K),
FR-F840-00170(7.5K) to 00770(37K)

FR-F820-01870(45K) or higher
FR-F840-00930(45K) to 03610(160K)

2) Disconnect the fan connectors.

3) Remove the fan.

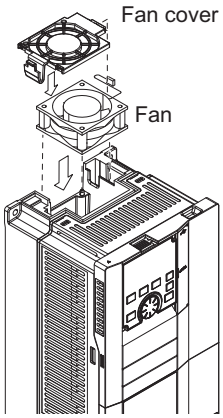

FR-F820-00105(2.2K) to 00250(5.5K)
FR-F840-00083(3.7K), 00126(5.5K)

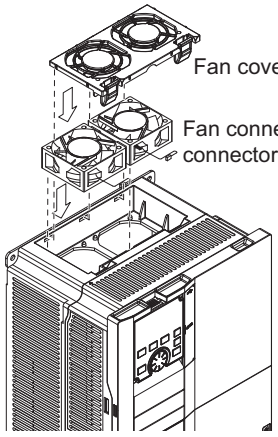

FR-F820-00340(7.5K) to 01540(37K)
FR-F840-00170(7.5K) to 00770(37K)

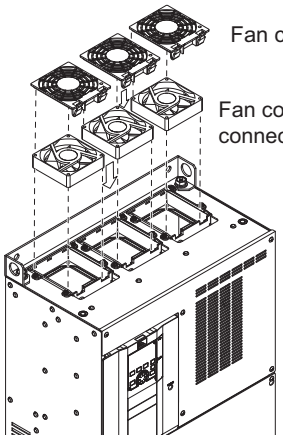

FR-F820-01870(45K) or higher
FR-F840-00930(45K) to 03610(160K)

*1 The number of cooling fans differs according to the inverter capacity.

◆Reinstallation (FR-F820-00105(2.2K) to 04750(110K), FR-F840-00083(3.7K) to 03610(160K))

1) After confirming the orientation of the fan, reinstall the fan so that the "AIR FLOW" faces up.

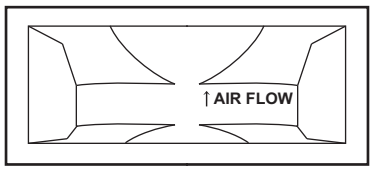

2) Reconnect the fan connectors.

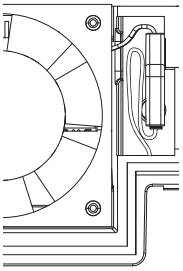

FR-F820-00105(2.2K) to 00250(5.5K)
FR-F840-00083(3.7K), 00126(5.5K)

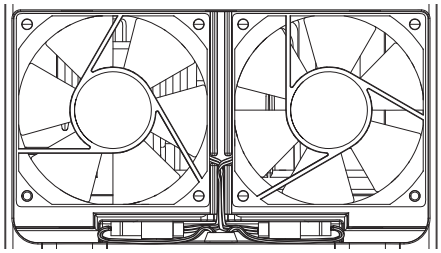

FR-F820-00340(7.5K) to 00770(18.5K),
FR-F840-00170(7.5K) to 00380(18.5K)

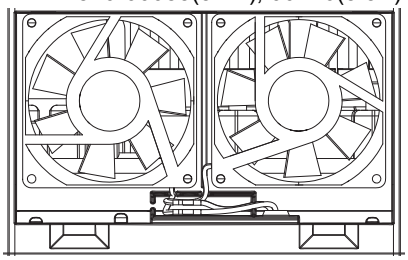

FR-F820-00930(22K), 01250(30K)
FR-F840-00470(22K), 00620(30K)

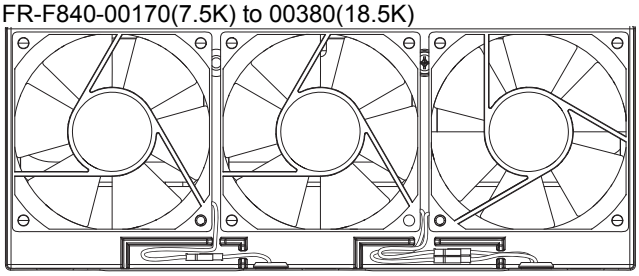

FR-F820-01540(37K)
FR-F840-00770(37K)

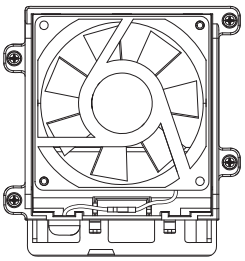

FR-F820-01870(45K), 02330(55K)
FR-F840-00930(45K) to 01800(75K)

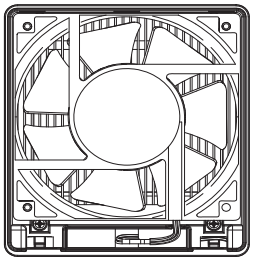

FR-F820-03160(75K) or higher
FR-F840-02160(90K) to 03610(160K)

3) Reinstall the fan cover.

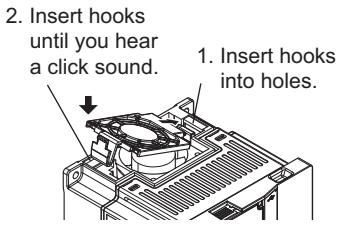

FR-F820-00105(2.2K) to 00250(5.5K)
FR-F840-00083(3.7K), 00126(5.5K)

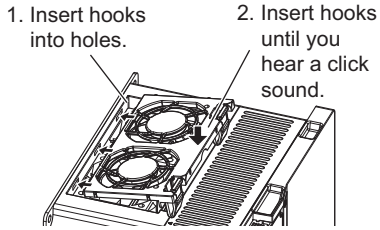

FR-F820-00340(7.5K) to 01540(37K),
FR-F840-00170(7.5K) to 00770(37K)

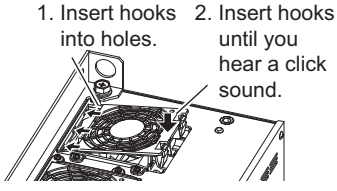

FR-F820-01870(45K) or higher
FR-F840-00930(45K) to 03610(160K)

NOTE

- Installing the fan in the opposite direction of air flow can cause the inverter life to be shorter.
- Prevent the cable from being caught when installing a fan.
- Switch the power OFF before replacing fans. Since the inverter circuits are charged with voltage even after power OFF, replace fans only when the inverter cover is on the inverter to prevent an electric shock accident.

◆Removal (FR-F840-04320(185K) or higher)

1) Remove the fan cover fixing screws, and remove the fan cover.
2) Disconnect the fan connector and remove the fan block.
3) Remove the fan fixing screws, and remove the fan.

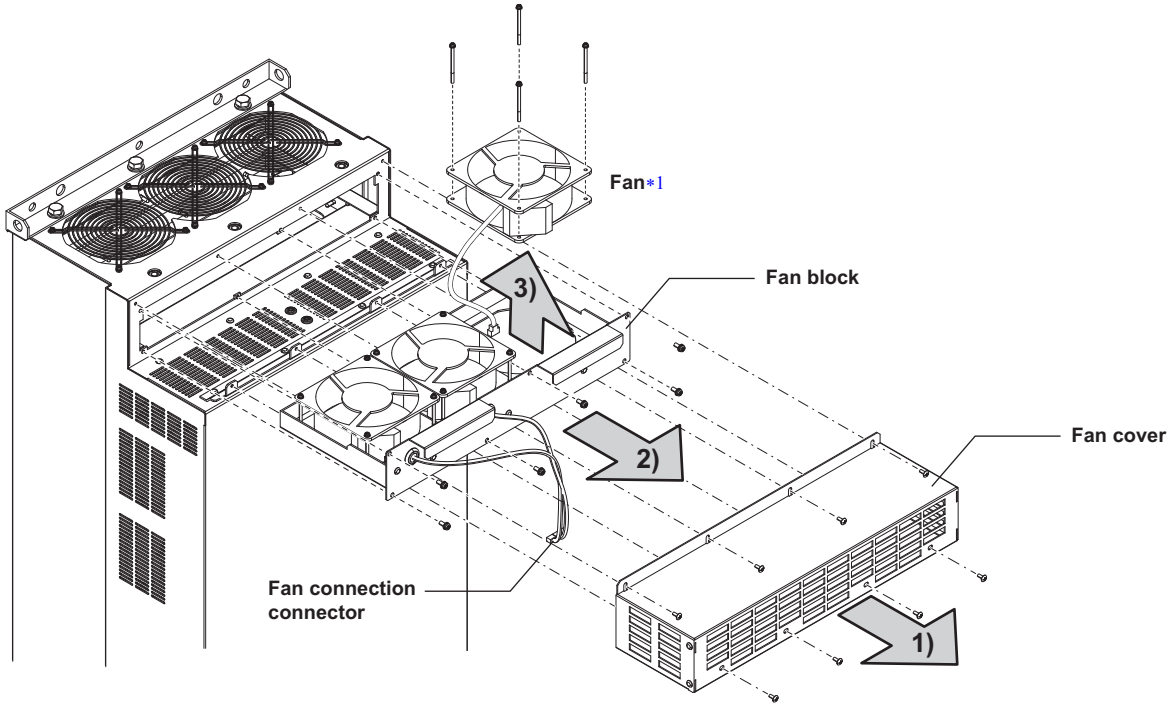

*1 The number of cooling fans differs according to the inverter capacity.

◆ Reinstallation FR-F840-04320(185K) or higher)

1) After confirming the orientation of the fan, reinstall the fan so that the arrow on the left of "AIR FLOW" faces up.

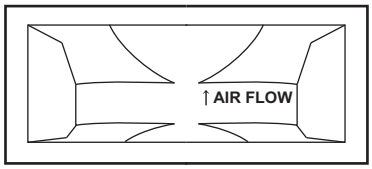

<Fan side face>

2) Install fans referring to the above figure.

NOTE

- Installing the fan in the opposite air flow direction can cause the inverter life to be shorter.
- Prevent the cable from being caught when installing a fan.
- Switch the power OFF before replacing fans. Since the inverter circuits are charged with voltage even after power OFF, replace fans only when the inverter cover is on the inverter to prevent an electric shock accident.

◆Smoothing capacitors

A large-capacity aluminum electrolytic capacitor is used for smoothing in the main circuit DC section, and an aluminum electrolytic capacitor is used for stabilizing the control power in the control circuit. Their characteristics are deteriorated by the adverse effects of ripple currents, etc. The replacement intervals greatly vary with the surrounding air temperature and operating conditions. When the inverter is operated in air-conditioned, normal environment conditions, replace the capacitors about every 10 years.

The appearance criteria for inspection are as follows:

- Case: Check the side and bottom faces for expansion.
- Sealing plate: Check for remarkable warp and extreme crack.
- heck for external crack, discoloration, liquid leakage, etc. Judge that the capacitor has reached its life when the measured capacitance of the capacitor reduced below 80% of the rating.

NOTE

- The inverter diagnoses the main circuit capacitor and control circuit capacitor by itself and can judge their lives. (Refer to page 180.)

◆Relays

To prevent a contact fault, etc., relays must be replaced according to the cumulative number of switching times (switching life).

◆Main circuit fuse inside the inverter (FR-F840-04320(185K) or higher)

A fuse is used inside the inverter. Surrounding air temperature and operating condition affect the life of fuses. When the inverter is used in a normal air-conditioned environment, replace its fuse after about 10 years.

7.1.7 Inverter replacement

The inverter can be replaced with the control circuit wiring kept connected. Before replacement, remove the wiring cover of the inverter.

1) Loosen the two mounting screws at the both side of the control circuit terminal block. (These screws cannot be removed.) Slide down the control circuit terminal block to remove it.

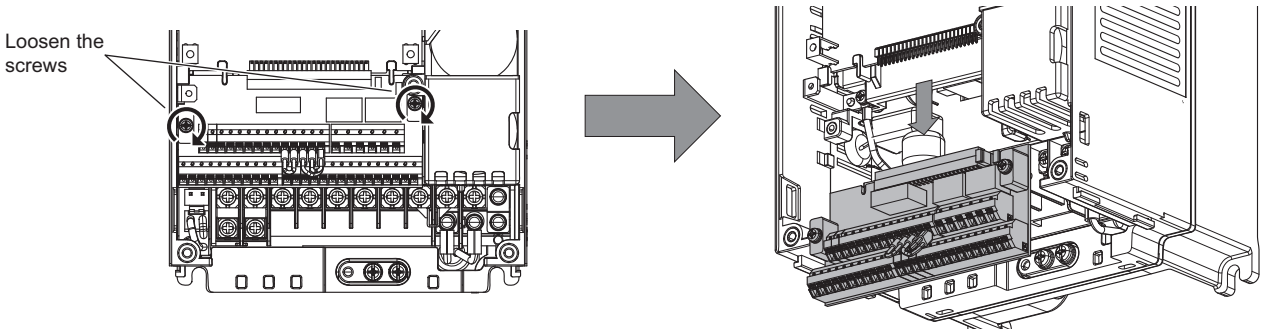

2) Be careful not to bend the pins of the inverter's control circuit connector, reinstall the control circuit terminal block and fix it with the mounting screws.

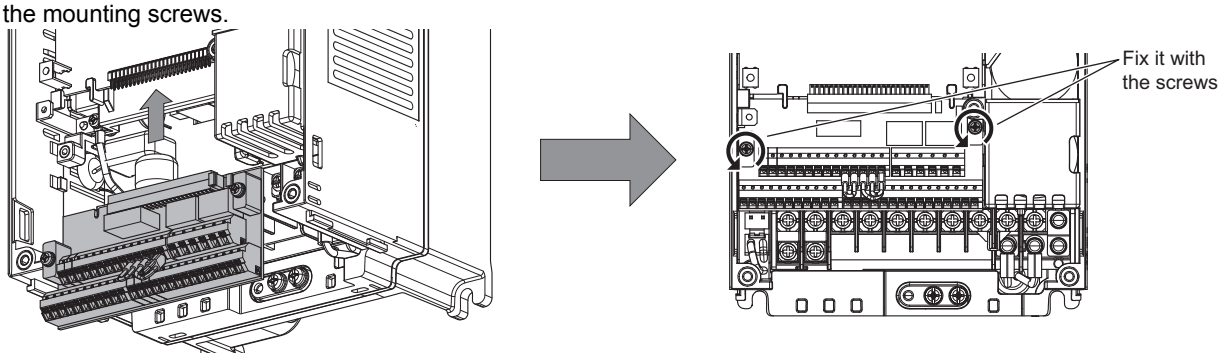

NOTE

- Before starting inverter replacement, switch power OFF, wait for at least 10 minutes, and then check the voltage with a tester and such to ensure safety.

7.2 Measurement of main circuit voltages, currents and powers

Since the voltages and currents on the inverter power supply and output sides include harmonics, measurement data depends on the instruments used and circuits measured.
When instruments for commercial frequency are used for measurement, measure the following circuits with the instruments given on the next page.

NOTE

- When installing meters etc. on the inverter output side
  When the inverter-to-motor wiring length is large, especially in the 400 V class, small-capacity models, the meters and CTs may generate heat due to line-to-line leakage current. Therefore, choose the equipment which has enough allowance for the current rating.
  To measure and display the output voltage and output current of the inverter, it is recommended to use the terminal AM and FM/CA output functions of the inverter.

◆Examples of measuring points and instruments

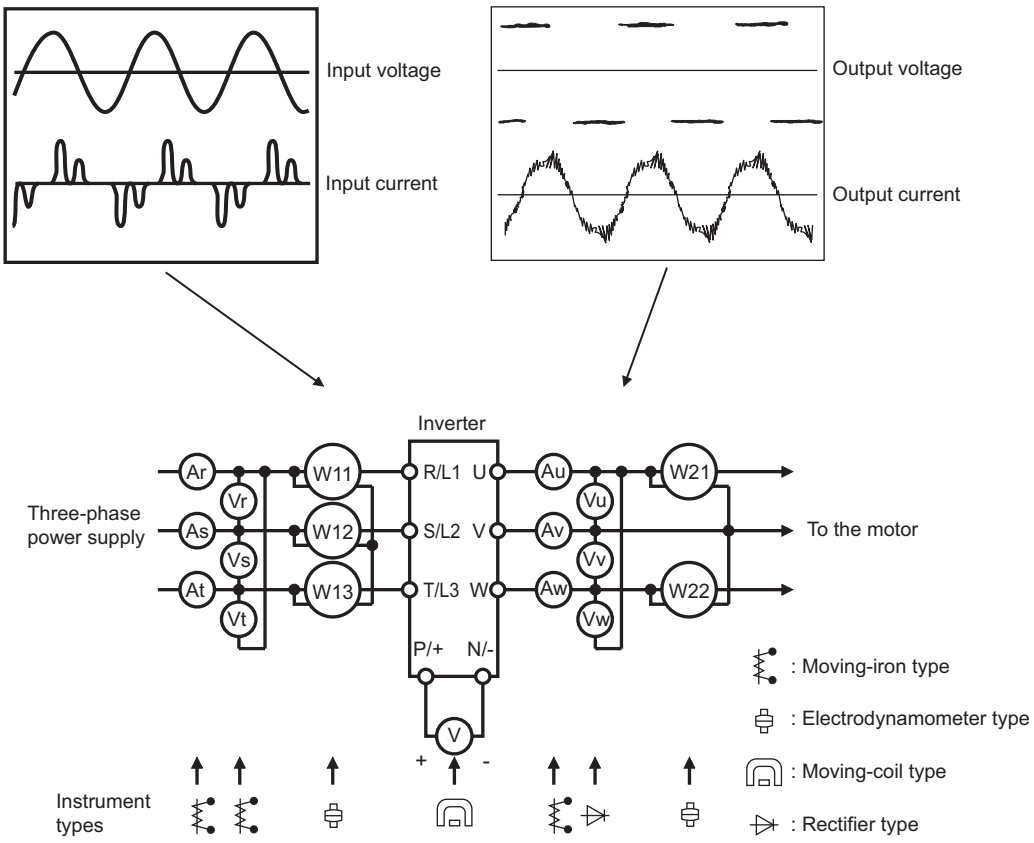

7

◆Measuring points and instruments

Item	Measuring point	Measuring instrument	Remarks (reference measured value)	
Power supply voltage V1	Across R/L1 and S/L2, S/L2 and T/L3, T/L3 and R/L1	Moving-iron type AC voltmeter*4	Commercial power supply Within permissible AC voltage fluctuation (Refer to page 578.)	
Power supply side current I1	R/L1, S/L2, T/L3 line current	Moving-iron type AC ammeter*4		
Power supply side power P1	R/L1, S/L2, T/L3 and Across R/L1 and S/L2, S/L2 and T/L3, T/L3 and R/L1	Digital power meter (for inverter) or electrodynamic type single-phase wattmeter	P1 = W11 + W12 + W13 (3-wattmeter method)	
Power supply side power factor Pf1	Calculate after measuring power supply voltage, power supply side current and power supply side power. $Pf_1 = \frac{P_1}{\sqrt{3}V_1 \times I_1} \times 100\ \%$			
Output side voltage V2	Across U and V, V and W, and W and U	Rectifier type AC voltage meter*1*4 (moving-iron type cannot measure.)	Difference between the phases is within 1% of the maximum output voltage.	
Output side current I2	U, V and W line currents	Moving-iron type AC ammeter*2*4	Difference between the phases is 10% or lower of the rated inverter current.	
Output side power P2	U, V, W and across U and V, V and W	Digital power meter (for inverter) or electrodynamic type single-phase wattmeter	P2 = W21 + W22 2-wattmeter method (or 3-wattmeter method)	
Output side power factor Pf2	Calculate in similar manner to power supply side power factor. $Pf_2 = \frac{P_2}{\sqrt{3}V_2 \times I_2} \times 100\ \%$			
Converter output	Across P/+ and N/-	Moving-coil type (such as tester)	Inverter LED is lit. 1.35 × V1	
Frequency setting signal	Across 2, 4(+) and 5	Moving-coil type (tester and such may be used.) (internal resistance 50 kΩ or more)	0 to 10 VDC, 4 to 20 mA	"5" is common
	Across 1(+) and 5		0 to ±5 VDC and 0 to ±10 VDC	
Frequency setting power supply	Across 10(+) and 5		5.2 VDC	
	Across 10E(+) and 5		10 VDC	
Frequency meter signal	Across AM(+) and 5		Approximately 10 VDC at maximum frequency (without frequency meter)	
	Across CA(+) and 5		Approximately 20 mADC at maximum frequency	
	Across FM(+) and SD		Approximately 5 VDC at maximum frequency (without frequency meter) 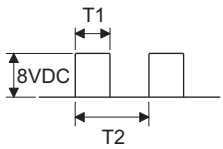 Pulse width T1: Adjust with **C0 (Pr.900)**. Pulse cycle T2: Set with **Pr.55**. (frequency monitor only)	"SD" is common
Start signal Select signal Reset signal Output stop signal	Across STF, STR, RH, RM, RL, JOG, RT, AU, STP (STOP), CS, RES, MRS(+) and SD (for sink logic)		When open 20 to 30 VDC ON voltage: 1 V or less	
Fault signal	Across A1 and C1 Across B1 and C1	Moving-coil type (such as tester)	Continuity check*3 [Normal] / [Fault] Across A1 and C1: Discontinuity / Continuity Across B1 and C1: Continuity / Discontinuity	

*1 Use an FFT to measure the output voltage accurately. A tester or general measuring instrument cannot measure accurately.

*2 When the carrier frequency exceeds 5 kHz, do not use this instrument since using it may increase eddy current losses produced in metal parts inside the instrument, leading to burnout. In this case, use an approximate-effective value type.

*3 When the setting of **Pr.195 ABC1 terminal function selection** is the positive logic

*4 A digital power meter (designed for inverter) can also be used to measure.

7.2.1 Measurement of powers

Use digital power meters (for inverter) for the both of inverter input and output side. Alternatively, measure using electrodynamic type single-phase wattmeters for the both of inverter input and output side in two-wattmeter or three-wattmeter method. As the current is liable to be imbalanced especially in the input side, it is recommended to use the three-wattmeter method.

Examples of measured value differences produced by different measuring meters are shown below.

An error will be produced by difference between measuring instruments, e.g. power calculation type and two- or three-wattmeter type three-phase wattmeter. When a CT is used in the current measuring side or when the meter contains a PT on the voltage measurement side, an error will also be produced due to the frequency characteristics of the CT and PT.

[Measurement conditions]

Constant output of 60 Hz or more frequency with a constant-torque (100%). The value obtained by the 3-wattmeter method with a 4-pole 3.7 kW induction motor is assumed to be 100%.

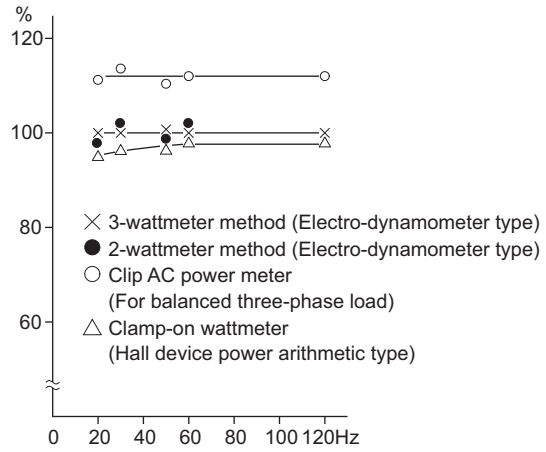

Example of measuring inverter input power

[Measurement conditions]

Constant output of 60 Hz or more frequency with a constant-torque (100%). The value obtained by the 3-wattmeter method with a 4-pole 3.7 kW induction motor is assumed to be 100%.

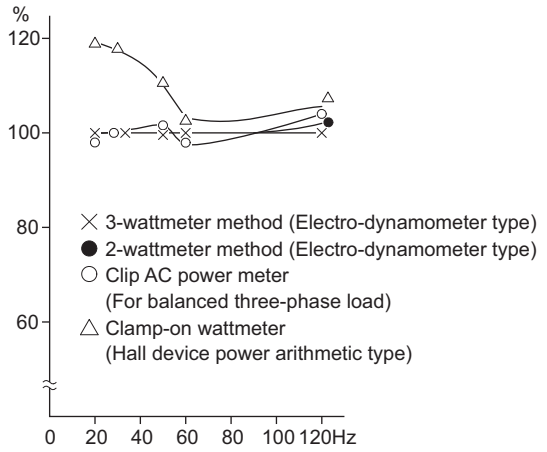

Example of measuring inverter output power

7.2.2 Measurement of voltages and use of PT

◆Inverter input side

As the input side voltage has a sine wave and it is extremely small in distortion, accurate measurement can be made with an ordinary AC meter.

◆Inverter output side

Since the output side voltage has a PWM-controlled rectangular wave, always use a rectifier type voltmeter. A needle type tester cannot be used to measure the output side voltage as it indicates a value much greater than the actual value. A moving-iron type meter indicates an effective value which includes harmonics and therefore the value is larger than that of the fundamental wave. The value monitored on the operation panel is the inverter-controlled voltage itself. Hence, that value is accurate and it is recommended to monitor values (analog output) using the operation panel.

◆PT

No PT can be used in the output side of the inverter. Use a direct-reading meter. (A PT can be used in the input side of the inverter.)

7.2.3 Measurement of currents

Use moving-iron type meters on both the input and output sides of the inverter. However, if the carrier frequency exceeds 5 kHz, do not use that meter since an overcurrent losses produced in the internal metal parts of the meter will increase and the meter may burn out. In this case, use an approximate-effective value type.
Since current on the inverter input side tends to be unbalanced, measurement of three phases is recommended. Correct value cannot be obtained by measuring only one or two phases. On the other hand, the unbalanced ratio of each phase of the output side current should be within 10%.
When a clamp ammeter is used, always use an effective value detection type. A mean value detection type produces a large error and may indicate an extremely smaller value than the actual value. The value monitored on the operation panel is accurate if the output frequency varies, and it is recommended to monitor values (provide analog output) using the operation panel.
Examples of measured value differences produced by different measuring meters are shown below.

[Measurement conditions]
Indicated value of the moving-iron type ammeter is 100%.

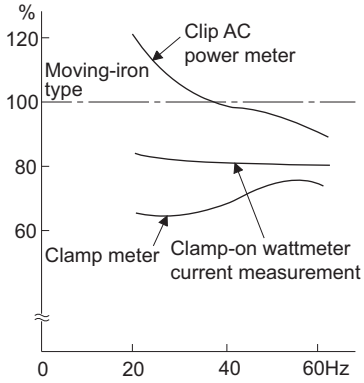

Example of measuring inverter input current

[Measurement conditions]
Indicated value of the moving-iron type ammeter is 100%.

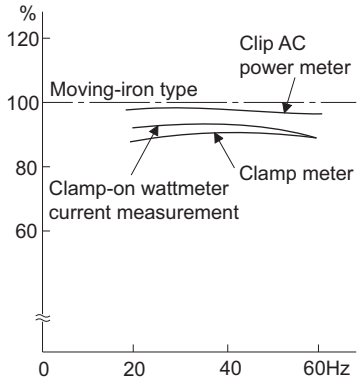

Example of measuring inverter output current

7.2.4 Use of CT and transducer

A CT may be used in both the input and output sides of the inverter. Use the one with the largest possible VA ability because an error will increase if the frequency gets lower.
When using a transducer, use the effective value calculation type which is immune to harmonics.

7.2.5 Measurement of inverter input power factor

Calculate using effective power and apparent power. A power-factor meter cannot indicate an exact value.

$$\text{Total power factor of the inverter} = \frac{\text{Effective power}}{\text{Apparent power}} = \frac{\text{Three-phase input power found by the 3-wattmeter method}}{\sqrt{3} \times \text{V (power supply voltage)} \times \text{I (input current effective value)}}$$

7.2.6 Measurement of converter output voltage (across terminals P and N)

The output voltage of the converter is output across terminals P and N and can be measured with a moving-coil type meter (tester). Although the voltage varies according to the power supply voltage, approximately 270 VDC to 300 VDC (540 VDC to 600 VDC for the 400 V class) is output when no load is connected and voltage decreases during driving load operation.
When energy is regenerated from the motor during deceleration, for example, the converter output voltage rises to nearly 400 VDC to 450 VDC (800 VDC to 900 VDC for the 400 V class) maximum.

7.2.7 Measurement of inverter output frequency

In the initial setting of the FM-type inverter, a pulse train proportional to the output frequency is output across the pulse train output terminals FM and SD of the inverter. This pulse train output can be counted by a frequency counter, or a meter (moving-coil type voltmeter) can be used to read the mean value of the pulse train output voltage. When a meter is used to measure the output frequency, approximately 5 VDC is indicated at the maximum frequency.
For detailed specifications of the pulse train output terminal FM, refer to page 279.
In the initial setting of the CA-type inverter, a pulse train proportional to the output frequency is output across the analog current output terminals CA and 5 of the inverter. Measure the current using an ammeter or tester.
For detailed specifications of the analog current output terminal CA, refer to page 281.

7.2.8 Insulation resistance test using megger

- For the inverter, conduct the insulation resistance test on the main circuit only as shown below and do not perform the test on the control circuit. (Use a 500 VDC megger.)

NOTE

- Before performing the insulation resistance test on the external circuit, disconnect the cables from all terminals of the inverter so that the test voltage is not applied to the inverter.
- For the continuity test of the control circuit, use a tester (high resistance range) and do not use the megger or buzzer.

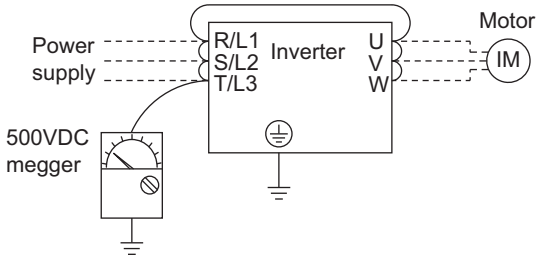

7.2.9 Pressure test

Do not conduct a pressure test. Deterioration may occur.

MEMO

8 SPECIFICATIONS

This chapter explains the "SPECIFICATIONS" of this product.
Always read the instructions before using the equipment.
For the "SPECIFICATIONS" of the separated converter type, refer to the FR-F802 (Separated Converter Type) Instruction Manual (Hardware) [IB-0600550ENG].

8.1 Inverter rating 578
8.2 Motor rating 580
8.3 Common specifications 583
8.4 Outline dimension drawings 585

8.1 Inverter rating

◆200 V class

Model FR-F820-[ ]			00046	00077	00105	00167	00250	00340	00490	00630	00770	00930	01250	01540	01870	02330	03160	03800	04750
			0.75K	1.5K	2.2K	3.7K	5.5K	7.5K	11K	15K	18.5K	22K	30K	37K	45K	55K	75K	90K	110K
Applicable motor capacity (kW) *1		SLD	0.75	1.5	2.2	3.7	5.5	7.5	11	15	18.5	22	30	37	45	55	75	90/110	132
		LD	0.75	1.5	2.2	3.7	5.5	7.5	11	15	18.5	22	30	37	45	55	75	90	110
Output	Rated capacity (kVA) *2	SLD	1.8	2.9	4	6.4	10	13	19	24	29	35	48	59	71	89	120	145	181
		LD	1.6	2.7	3.7	5.8	8.8	12	17	22	27	32	43	53	65	81	110	132	165
	Rated current (A)	SLD	4.6	7.7	10.5	16.7	25	34	49	63	77	93	125	154	187	233	316	380	475
		LD	4.2	7	9.6	15.2	23	31	45	58	70.5	85	114	140	170	212	288	346	432
	Overload current rating *3	SLD	110% 60 s, 120% 3 s (inverse-time characteristics) at surrounding air temperature 40°C																
		LD	120% 60 s, 150% 3 s (inverse-time characteristics) at surrounding air temperature 50°C																
	Rated voltage *4		Three-phase 200 to 240 V																
Power supply	Rated input AC voltage/frequency		Three-phase 200 to 240 V 50 Hz/60 Hz																
	Permissible AC voltage fluctuation		170 to 264 V 50 Hz/60 Hz																
	Permissible frequency fluctuation		±5%																
	Rated input current (A) *5	SLD	5.3	8.9	13.2	19.7	31.3	45.1	62.8	80.6	96.7	115	151	185	221	269	316	380	475
		LD	5	8.3	12.2	18.3	28.5	41.6	58.2	74.8	90.9	106	139	178	207	255	288	346	432
	Power supply capacity (kVA) *6	SLD	2	3.4	5	7.5	12	17	24	31	37	44	58	70	84	103	120	145	181
		LD	1.9	3.2	4.7	7	11	16	22	29	35	41	53	68	79	97	110	132	165
Protective structure (IEC 60529) *7			Enclose type (IP20)										Open type (IP00)						
Cooling system			Self-cooling		Forced air cooling														
Approx. mass (kg)			1.9	2.1	3.0	3.0	3.0	6.3	6.3	8.3	15	15	15	22	42	42	54	74	74

*1 The applicable motor capacity indicated is the maximum capacity applicable for use of the Mitsubishi 4-pole standard motor.

*2 The rated output capacity indicated assumes that the output voltage is 220 V for 200 V class.

*3 The % value of the overload current rating indicated is the ratio of the overload current to the inverter's rated output current. For repeated duty, allow time for the inverter and motor to return to or below the temperatures under 100% load.

*4 The maximum output voltage does not exceed the power supply voltage. The maximum output voltage can be changed within the setting range. However, the maximum point of the voltage waveform at the inverter output side is the power supply voltage multiplied by about $\sqrt{2}$.

*5 The rated input current indicates a value at a rated output voltage. The impedance at the power supply side (including those of the input reactor and cables) affects the rated input current.

*6 The power supply capacity is the value when at the rated output current. It varies by the impedance at the power supply side (including those of the input reactor and cables).

*7 FR-DU08: IP40 (except for the PU connector section)

◆400 V class

Model FR-F840-[ ]		00023	00038	00052	00083	00126	00170	00250	00310	00380	00470	00620	00770	00930	01160	01800	02160	02600	03250	03610	04320	04810	05470	06100	06830
		0.75K	1.5K	2.2K	3.7K	5.5K	7.5K	11K	15K	18.5K	22K	30K	37K	45K	55K	75K	90K	110K	132K	160K	185K	220K	250K	280K	315K
Applicable motor capacity (kW) *1	SLD	0.75	1.5	2.2	3.7	5.5	7.5	11	15	18.5	22	30	37	45	55	75/ 90	110	132	160	185	220	250	280	315	355
	LD	0.75	1.5	2.2	3.7	5.5	7.5	11	15	18.5	22	30	37	45	55	75	90	110	132	160	185	220	250	280	315
Output: Rated capacity (kVA) *2	SLD	1.8	2.9	4	6.3	10	13	19	24	29	36	47	59	71	88	137	165	198	248	275	329	367	417	465	521
	LD	1.6	2.7	3.7	5.8	8.8	12	18	22	27	33	43	53	65	81	110	137	165	198	248	275	329	367	417	465
Output: Rated current (A)	SLD	2.3	3.8	5.2	8.3	12.6	17	25	31	38	47	62	77	93	116	180	216	260	325	361	432	481	547	610	683
	LD	2.1	3.5	4.8	7.6	11.5	16	23	29	35	43	57	70	85	106	144	180	216	260	325	361	432	481	547	610
Output: Overload current rating *3	SLD	110% 60 s, 120% 3 s (inverse-time characteristics) at surrounding air temperature 40°C																							
	LD	120% 60 s, 150% 3 s (inverse-time characteristics) at surrounding air temperature 50°C																							
Output: Rated voltage *4		Three-phase 380 to 500 V																							
Power supply: Rated input AC voltage/frequency		Three-phase 380 to 500 V 50 Hz/60 Hz *8																							
Power supply: Permissible AC voltage fluctuation		323 to 550 V 50 Hz/60 Hz																							
Power supply: Permissible frequency fluctuation		±5%																							
Power supply: Rated input current (A) *5	SLD	3.2	5.4	7.8	10.9	16.4	22.5	31.7	40.3	48.2	58.4	76.8	97.6	115	141	180	216	260	325	361	432	481	547	610	683
	LD	3	4.9	7.3	10.1	15.1	22.3	31	38.2	44.9	53.9	75.1	89.7	106	130	144	180	216	260	325	361	432	481	547	610
Power supply: Power supply capacity (kVA) *6	SLD	2.5	4.1	5.9	8.3	12	17	24	31	37	44	59	74	88	107	137	165	198	248	275	329	367	417	465	521
	LD	2.3	3.7	5.5	7.7	12	17	24	29	34	41	57	68	81	99	110	137	165	198	248	275	329	367	417	465
Protective structure (IEC 60529) *7		Enclose type (IP20)											Open type (IP00)												
Cooling system		Self-cooling			Forced air cooling																				
Approx. mass (kg)		2.5	2.5	2.5	3.0	3.0	6.3	6.3	8.3	8.3	15	15	23	41	41	43	52	55	71	78	117	117	166	166	166

*1 The applicable motor capacity indicated is the maximum capacity applicable for use of the Mitsubishi 4-pole standard motor.

*2 The rated output capacity indicated assumes that the output voltage is 440 V for 400 V class.

*3 The % value of the overload current rating indicated is the ratio of the overload current to the inverter's rated output current. For repeated duty, allow time for the inverter and motor to return to or below the temperatures under 100% load.

*4 The maximum output voltage does not exceed the power supply voltage. The maximum output voltage can be changed within the setting range. However, the maximum point of the voltage waveform at the inverter output side is the power supply voltage multiplied by about $\sqrt{2}$.

*5 The rated input current indicates a value at a rated output voltage. The impedance at the power supply side (including those of the input reactor and cables) affects the rated input current.

*6 The power supply capacity is the value when at the rated output current. It varies by the impedance at the power supply side (including those of the input reactor and cables).

*7 FR-DU08: IP40 (except for the PU connector section)

*8 For the power voltage exceeding 480 V, set **Pr.977 Input voltage mode selection**. (For details, refer to **page 168**.)

8.2 Motor rating

8.2.1 Premium high-efficiency IPM motor [MM-EFS (1500 r/min) series]

◆Motor specification

Moter model	200V class MM-EFS[]1M / 400V class MM-EFS[]1M4	7	15	22	37	55	75	11K	15K	18K	22K	30K	37K	45K	55K
Compatible inverter *3	200V class FR-F820-[]	00046 (0.75K)	00077 (1.5K)	00105 (2.2K)	00167 (3.7K)	00250 (5.5K)	00340 (7.5K)	00490 (11K)	00630 (15K)	00770 (18.5K)	00930 (22K)	01250 (30K)	01540 (37K)	01870 (45K)	02330 (55K)
	400V class FR-F840-[]	00023 (0.75K)	00038 (1.5K)	00052 (2.2K)	00083 (3.7K)	00126 (5.5K)	00170 (7.5K)	00250 (11K)	00310 (15K)	00380 (18.5K)	00470 (22K)	00620 (30K)	00770 (37K)	00930 (45K)	01160 (55K)
Continuous characteristic *1	Rated output (kW)	0.75	1.5	2.2	3.7	5.5	7.5	11	15	18.5	22	30	37	45	55
	Rated torque (Num)	4.77	9.55	14	23.6	35	47.7	70	95.5	118	140	191	236	286	350
Rated speed (r/min)		1500													
Maximum speed (r/min)		2250													
Number of poles		6								8					
Maximum torque		120% 60 s													
Frame number		80M	90L	100L	112M	132S	132M	160M	160L	180M		180L	200L		225S
Inertia moment J ($\times 10^{-4}$ kg·m^2)		20	40	55	110	275	280	760	770	1700	1700	1900	3400	3850	6500
Rated current (A)	200 V class	3	6.0	8.2	13.4	20	27	40	54	66	79	110	128	157	194
	400 V class	1.5	3.0	4.1	6.7	10	13.5	20	27	33	39.5	55	64	78.5	97
Structure		Totally-enclosed fan-cooled motor. With steel framed legs. (protective structure IP44 *2)													
Insulation class		F class													
Vibration class		V-15													
Environment	Surrounding air temperature and humidity	-10°C to +40°C (non-freezing) · 90%RH or less (non-condensing)													
	Storage temperature and humidity	-20°C to +70°C (non-freezing) · 90%RH or less (non-condensing)													
	Atmosphere	Indoors (not under direct sunlight), and free from corrosive gas, flammable gas, oil mist, dust and dirt.													
	Altitude	Maximum 1,000 m above sea level													
	Vibration	4.9 m/s^2													
Mass (kg)		11	15	22	31	50	53	95	100	135		155	215	230	285

*1 The above characteristics apply when the rated AC voltage is input from the inverter. (Refer to page 578.) Output and rated motor speed are not guaranteed when the power supply voltage drops.

*2 This excludes the part where the axis passes through.

*3 For the LD rating

◆Motor torque characteristic

The following figure shows the torque characteristic of the premium high-efficiency IPM motor [MM-EFS (1500 r/min) series] when used with an inverter.

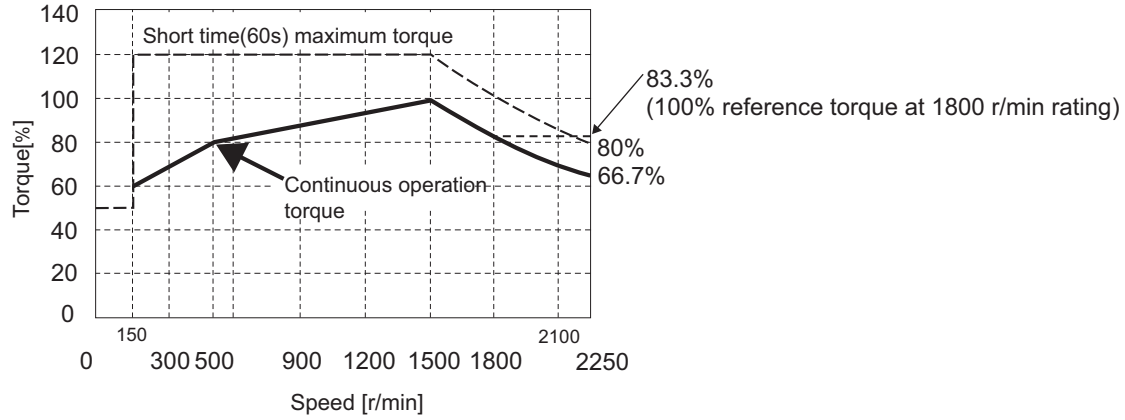

NOTE

- The motor can also be used for applications which require the rated speed of 1800 r/min.
- The torque characteristic is when the armature winding temperature is 20°C, and the input voltage to the inverter is 200 VAC or 400 VAC.
- Constant-speed operation cannot be performed for the speed of 150 r/min or less.

8.2.2 Premium high-efficiency IPM motor [MM-THE4 (1500 r/min) series]

◆Motor specification

Moter model		MM-THE4					
Voltage class		200V	400V				
Applicable inverter *2		FR-F820-[]	FR-F840-[]				
		03160(75K)	01800(75K)	02160(90K)	02600(110K)	03250(132K)	03610(160K)
Continuous characteristic *1	Rated output (kW)	75	75	90	110	132	160
	Rated torque (N·m)	477	477	573	700	840	1018
Rated speed (r/min)		1500					
Maximum speed (r/min)		1800					
Number of poles		6					
Maximum torque		120% 60 s					
Frame number		250MA	250MA	250MD	280MD		
Inertia moment J ($\times 10^{-4}$ kg·m^2)		6000	6000	10000	17500	20500	23250
Rated current (A)		270	135	170	195	230	280
Structure		Totally-enclosed fan-cooled motor. With steel framed legs. (protective structure IP44)					
Insulation class		F class					
Vibration class		V-25					
Environment	Surrounding air temperature and humidity	-10°C to +40°C (non-freezing) · 90%RH or less (non-condensing)					
	Storage temperature and humidity	-20°C to +70°C (non-freezing) · 90%RH or less (non-condensing)					
	Atmosphere	Indoors (not under direct sunlight), and free from corrosive gas, flammable gas, oil mist, dust and dirt.					
	Altitude	Maximum 1,000 m above sea level					
	Vibration	4.9 m/s^2					
Mass (kg)		470	470	610	780	810	860

*1 Output and rated motor speed are not guaranteed when the power supply voltage drops.
*2 For the LD rating

◆Motor torque characteristic

The following figure shows the torque characteristic of the premium high-efficiency IPM motor [MM-THE4 (1500 r/min) series] when used with an inverter.

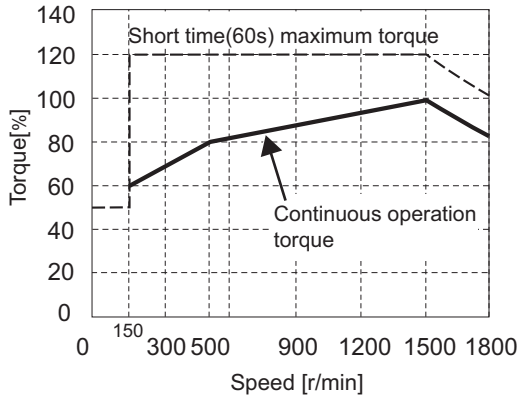

NOTE

- The motor can also be used for applications which require the rated speed of 1800 r/min.
- The torque characteristic is when the armature winding temperature is 20°C, and the input voltage to the inverter is 200 VAC or 400 VAC.
- Constant-speed operation cannot be performed for the speed of 150 r/min or less.

8.3 Common specifications

Control specifications	Control method		Soft-PWM control, high carrier frequency PWM control (selectable among V/F control (Optimum excitation control), Advanced magnetic flux vector control (Advanced optimum excitation control) and PM motor control)
	Output frequency range		0.2 to 590 Hz (The upper-limit frequency is 400 Hz under Advanced magnetic flux vector control, and PM motor control.)
	Frequency setting resolution	Analog input	0.015 Hz/60 Hz (terminal 2, 4: 0 to 10 V/12 bits) 0.03 Hz/60 Hz (0 to 5 V/11 bits or 0 to 20 mA/approx. 11 bits for terminals 2 and 4, 0 to ±10 V/12 bits for terminal 1) 0.06 Hz/60 Hz (0 to ±5 V/11 bits for terminal 1)
		Digital input	0.01 Hz
	Frequency accuracy	Analog input	Within ±0.2% of the max. output frequency (25°C ±10°C)
		Digital input	Within 0.01% of the set output frequency
	Voltage/frequency characteristics		Base frequency can be set from 0 to 590 Hz. Constant-torque/variable-torque pattern or adjustable 5 points V/F can be selected.
	Starting torque	Induction motor	120% 0.5 Hz (Advanced magnetic flux vector control)
		IPM motor	50%
	Torque boost		Manual torque boost
	Acceleration/deceleration time setting		0 to 3600 s (acceleration and deceleration can be set individually), linear or S-pattern acceleration/deceleration mode, backlash countermeasures acceleration/deceleration can be selected.
	DC injection brake (induction motor)		Operation frequency (0 to 120 Hz), operation time (0 to 10 s), operation voltage (0 to 30%) variable
	Stall prevention operation level		Activation range of stall prevention operation (SLD rating: 0 to 120%, LD rating: 0 to 150%). Whether to use the stall prevention or not can be selected. (V/F control, Advanced magnetic flux vector control)
Operation specifications	Frequency setting signal	Analog input	Terminals 2 and 4: 0 to 10 V, 0 to 5 V, 4 to 20 mA (0 to 20 mA) are available. Terminal 1: -10 to +10 V, -5 to 5 V are available.
		Digital input	Input using the setting dial of the operation panel or the parameter unit Four-digit BCD or 16-bit binary (when used with option FR-A8AX)
	Start signal		Forward and reverse rotation or start signal automatic self-holding input (3-wire input) can be selected.
	Input signals (twelve terminals)		Low-speed operation command, Middle-speed operation command, High-speed operation command, Second function selection, Terminal 4 input selection, Jog operation selection, Output stop, Start self-holding selection, Forward rotation command, Reverse rotation command, Inverter reset The input signal can be changed using **Pr.178 to Pr.189 (input terminal function selection)**.
	Pulse train input		100 kpps
	Operational functions		Maximum and minimum frequency settings, multi-speed operation, acceleration/deceleration pattern, thermal protection, DC injection brake, starting frequency, JOG operation, output stop (MRS), stall prevention, regeneration avoidance, increased magnetic excitation deceleration, DC feeding*1, frequency jump, rotation display, automatic restart after instantaneous power failure, electronic bypass sequence, remote setting, retry function, carrier frequency selection, fast-response current limit, forward/reverse rotation prevention, operation mode selection, slip compensation, speed smoothing control, traverse, auto tuning, applied motor selection, RS-485 communication, PID control, PID pre-charge function, cooling fan operation selection, stop selection (deceleration stop/coasting), power-failure deceleration stop function, PLC function, life diagnosis, maintenance timer, current average monitor, multiple rating, test run, 24 V power supply input for control circuit, safety stop function, self power management, BACnet communication, PID gain tuning, cleaning, load characteristics storage, emergency drive
	Output signal Open collector output (five terminals) Relay output (two terminals)		Inverter running, Up to frequency, Instantaneous power failure/undervoltage*1, Overload warning, Output frequency detection, Fault The output signal can be changed using **Pr.190 to Pr.196 (output terminal function selection)**. Fault codes of the inverter can be output (4 bits) from the open collector.
	Pulse train output		50 kpps
Indication	For meter	Pulse train output (FM type)	Max. 2.4 kHz: one terminal (output frequency) The monitored item can be changed using **Pr.54 FM/CA terminal function selection**.
		Current output (CA type)	Max. 20 mADC: one terminal (output current) The monitored item can be changed using **Pr.54 FM/CA terminal function selection**.
		Voltage output	Max. 10 VDC: one terminal (output voltage) The monitored item can be changed using **Pr.158 AM terminal function selection**.
	Operation panel (FR-DU08)	Operating status	Output frequency, output current, output voltage, frequency setting value The monitored item can be changed using **Pr.52 Operation panel main monitor selection**.
		Fault record	Fault record is displayed when a fault occurs. Past 8 fault records and the conditions immediately before the fault (output voltage/current/frequency/cumulative energization time/year/month/date/time) are saved.
Protective/ warning function		Protective function	Overcurrent trip during acceleration, Overcurrent trip during constant speed, Overcurrent trip during deceleration or stop, Regenerative overvoltage trip during acceleration, Regenerative overvoltage trip during constant speed, Regenerative overvoltage trip during deceleration or stop, Inverter overload trip (electronic thermal relay function), Motor overload trip (electronic thermal relay function), Heatsink overheat, Instantaneous power failure*1, Undervoltage*1, Input phase loss*1*2, Stall prevention stop, Loss of synchronism detection*2, Upper limit fault detection, Lower limit fault detection, Output side earth (ground) fault overcurrent, Output phase loss, External thermal relay operation*2, PTC thermistor operation*2, Option fault, Communication option fault, Parameter storage device fault, PU disconnection, Retry count excess*2, CPU fault, Operation panel power supply short circuit/RS-485 terminals power supply short circuit, 24 VDC power fault, Abnormal output current detection*2, Inrush current limit circuit fault*1, Communication fault (inverter), Analog input fault, USB communication fault, Safety circuit fault, Overspeed occurrence*2, 4 mA input fault*2, Pre-charge fault*2, PID signal fault*2, Internal circuit fault, User definition error in the PLC function
		Warning function	Fan alarm, Stall prevention (overcurrent), Stall prevention (overvoltage), Electronic thermal relay function pre-alarm, PU stop, Parameter copy, Safety stop, Maintenance timer 1 to 3*2, USB host error, Operation panel lock*2, Password locked*2, Parameter write error, Copy operation error, 24 V external power supply operation, Load fault warning, Emergency drive in operation

Common specifications

Environment	**Surrounding air temperature**	-10°C to +50°C (non-freezing) (LD rating) -10°C to +40°C (non-freezing) (SLD rating)
	Surrounding air humidity	With circuit board coating (conforming to IEC60721-3-3 3C2/3S2): 95% RH or less (non-condensing) Without circuit board coating: 90% RH or less (non-condensing)
	Storage temperature*3	-20°C to +65°C
	Atmosphere	Indoors (without corrosive gas, flammable gas, oil mist, dust and dirt, etc.)
	Altitude/vibration	Maximum 1000 m above sea level*4, 5.9 m/s^2 or less*5 at 10 to 55 Hz (directions of X, Y, Z axes)

*1 Available only for the standard model.

*2 This protective function is not available in the initial status.

*3 Temperature applicable for a short time, e.g. in transit.

*4 For the installation at an altitude above 1,000 m (up to 2,500 m), derate the rated current 3% per 500 m.

*5 2.9 m/s^2 or less for the FR-F840-04320(185K) or higher.

8.4 Outline dimension drawings

8.4.1 Inverter outline dimension drawings

FR-F820-00046(0.75K), FR-F820-00077(1.5K)

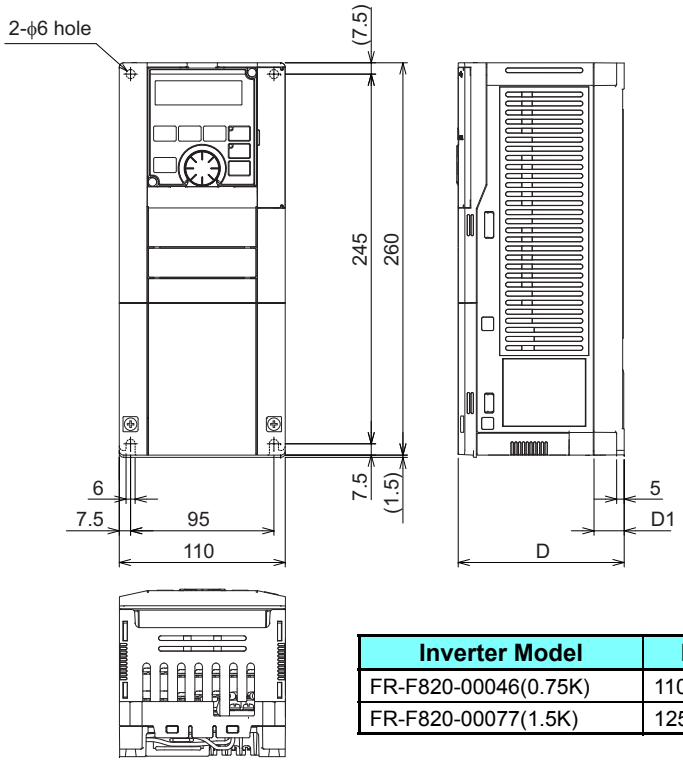

Inverter Model	D	D1
FR-F820-00046(0.75K)	110	20
FR-F820-00077(1.5K)	125	35

(Unit: mm)

FR-F820-00105(2.2K), 00167(3.7K), 00250(5.5K)

FR-F840-00023(0.75K), 00038(1.5K), 00052(2.2K), 00083(3.7K), 00126(5.5K)

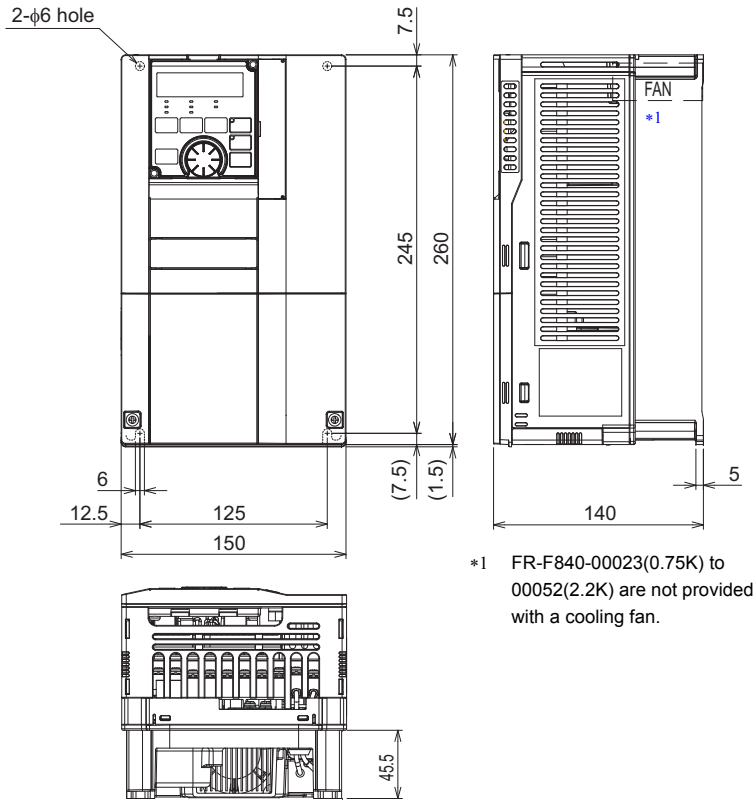

*1 FR-F840-00023(0.75K) to 00052(2.2K) are not provided with a cooling fan.

(Unit: mm)

Outline dimension drawings

FR-F820-00340(7.5K), 00490(11K), 00630(15K)

FR-F840-00170(7.5K), 00250(11K), 00310(15K), 00380(18.5K)

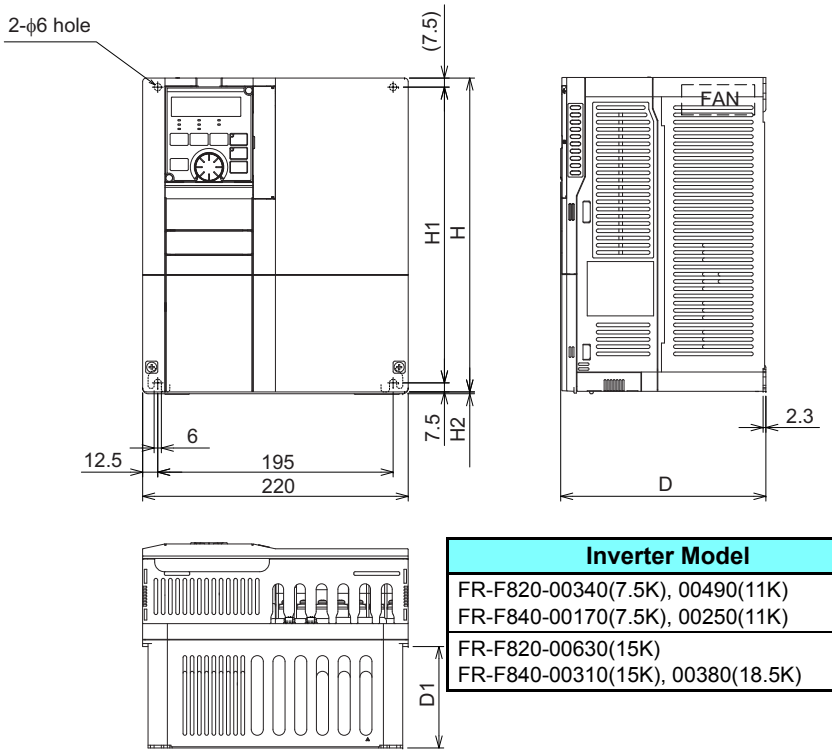

Inverter Model	H	H1	H2	D	D1
FR-F820-00340(7.5K), 00490(11K) FR-F840-00170(7.5K), 00250(11K)	260	245	1.5	170	84
FR-F820-00630(15K) FR-F840-00310(15K), 00380(18.5K)	300	285	3	190	101.5

(Unit: mm)

FR-F820-00770(18.5K), 00930(22K), 01250(30K)

FR-F840-00470(22K), 00620(30K)

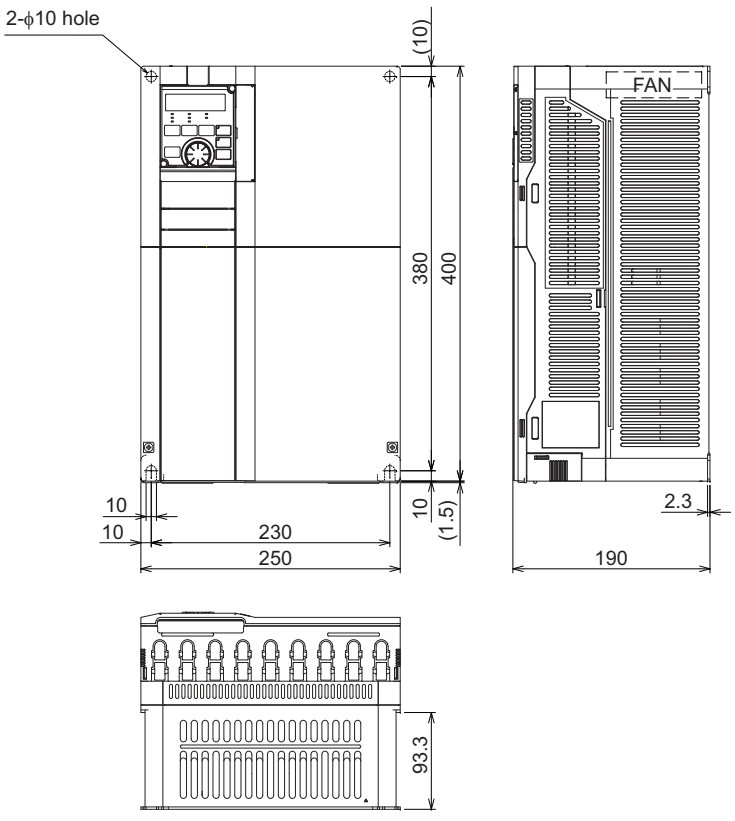

(Unit: mm)

FR-F820-01540(37K)

FR-F840-00770(37K)

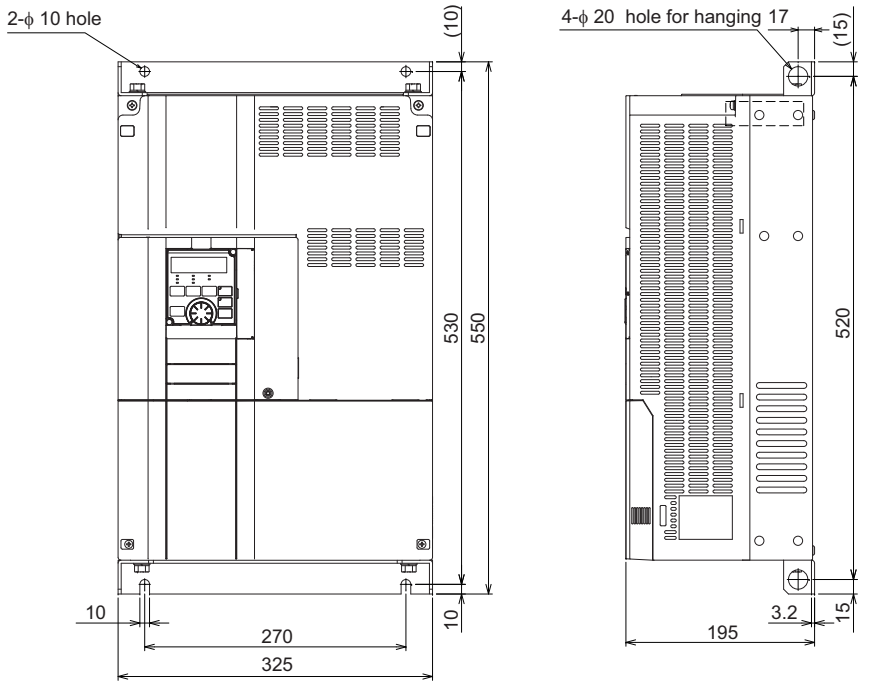

(Unit: mm)

FR-F820-01870(45K), 02330(55K), 03160(75K), 03800(90K), 04750(110K)

FR-F840-00930(45K), 01160(55K), 01800(75K), 02160(90K), 02600(110K), 03250(132K), 03610(160K)

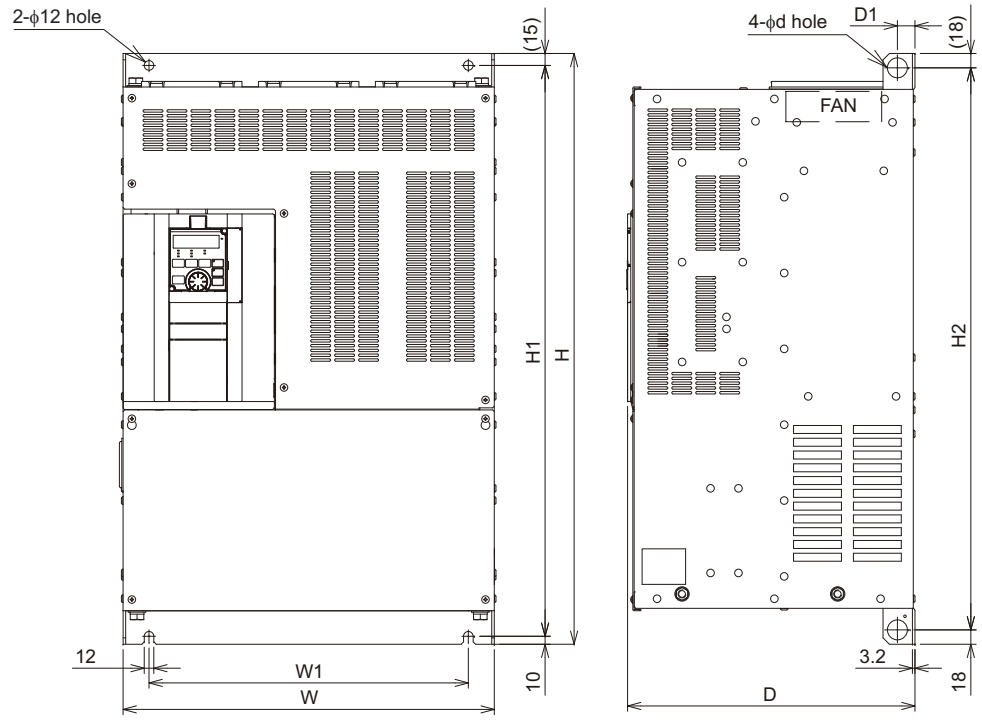

Inverter Model	W	W1	H	H1	H2	d	D	D1
FR-F820-01870(45K), 02330(55K) FR-F840-00930(45K), 01160(55K), 01800(75K)*1	435	380	550	525	514	25	250	24
FR-F820-03160(75K)*1	465	410	700	675	664	25	250	22
FR-F820-03800(90K)*1, 04750(110K)*1	465	400	740	715	704	24	360	22
FR-F840-02160(90K)*1, 02600(110K)*1	465	400	620	595	584	24	300	22
FR-F840-03250(132K)*1, 03610(160K)*1	465	400	740	715	704	25	360	22

*1 Always connect a DC reactor (FR-HEL), which is available as an option.

(Unit: mm)

Outline dimension drawings

FR-F840-04320(185K), 04810(220K)

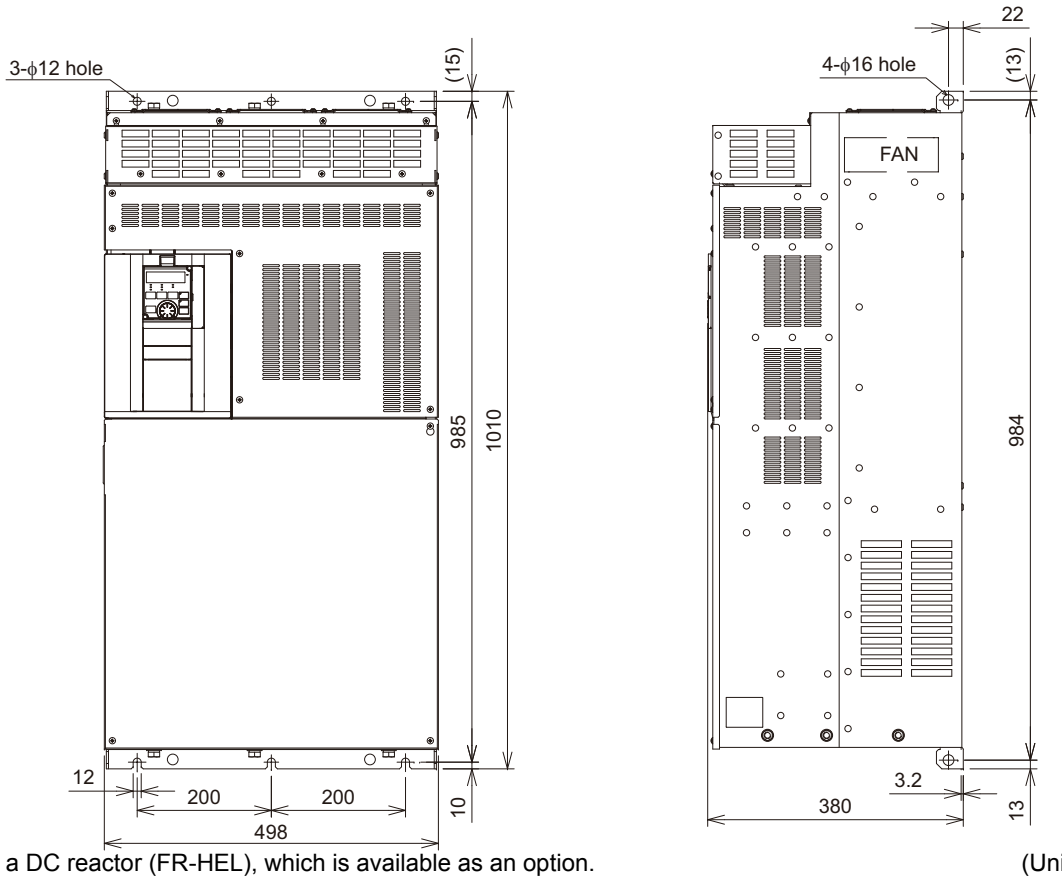

Always connect a DC reactor (FR-HEL), which is available as an option. (Unit: mm)

FR-F840-05470(250K), 06100(280K), 06830(315K)

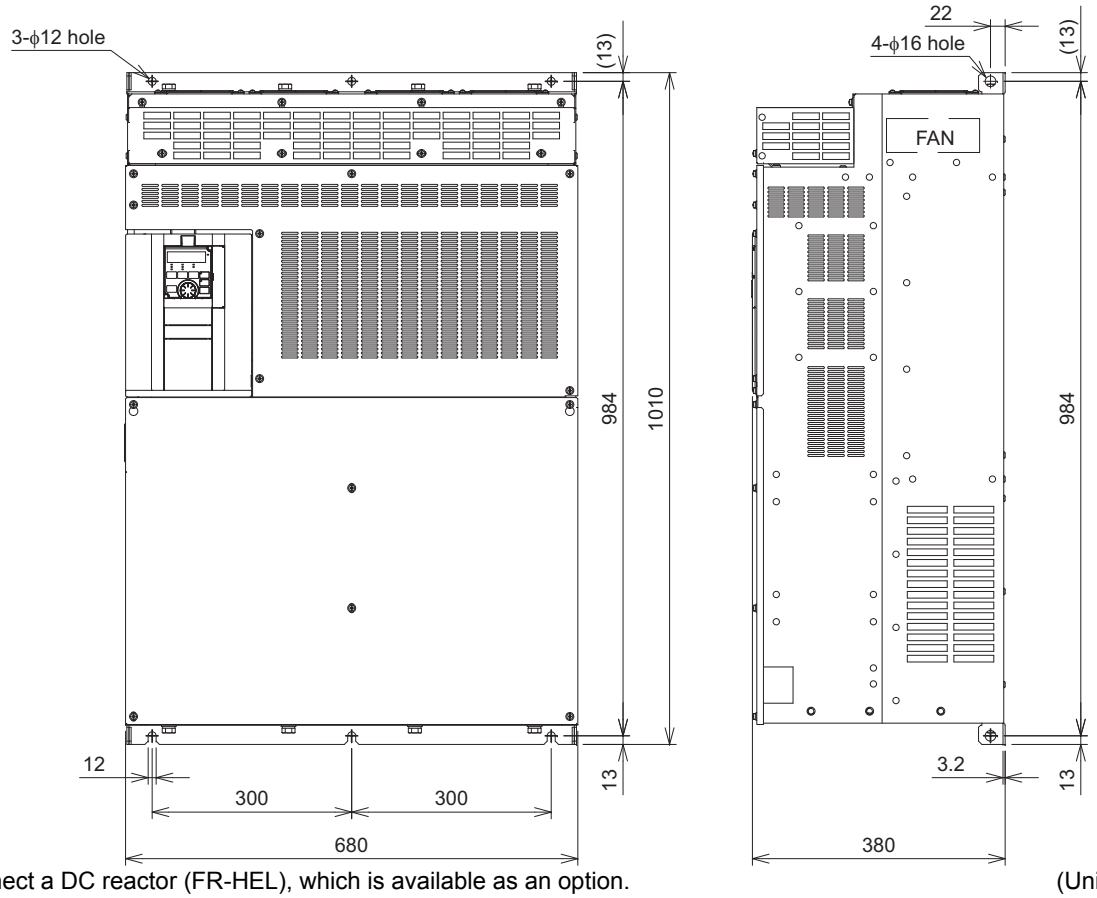

Always connect a DC reactor (FR-HEL), which is available as an option. (Unit: mm)

Operation panel (FR-DU08)

<Outline drawing>

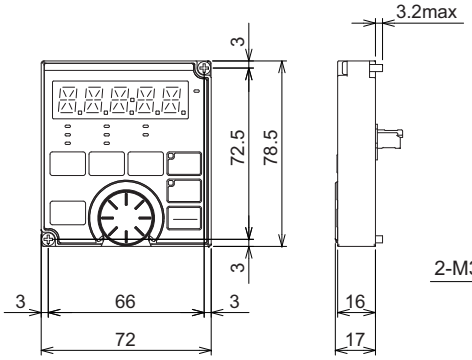

<Panel cutting dimension drawing>

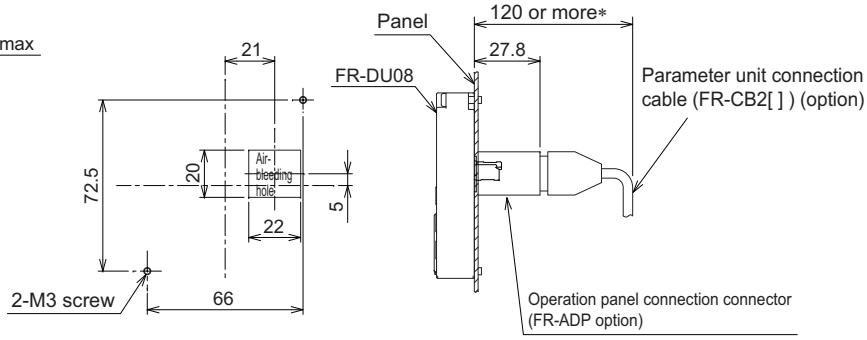

* Denotes the space required to connect an optional parameter unit connection cable (FR-CB2[ ]). When using another cable, leave the space required for the cable specification.

(Unit: mm)

8.4.2 Dedicated motor outline dimension drawings

◆Premium high-efficiency IPM motor [MM-EFS (1500 r/min) series]

• 30K or lower

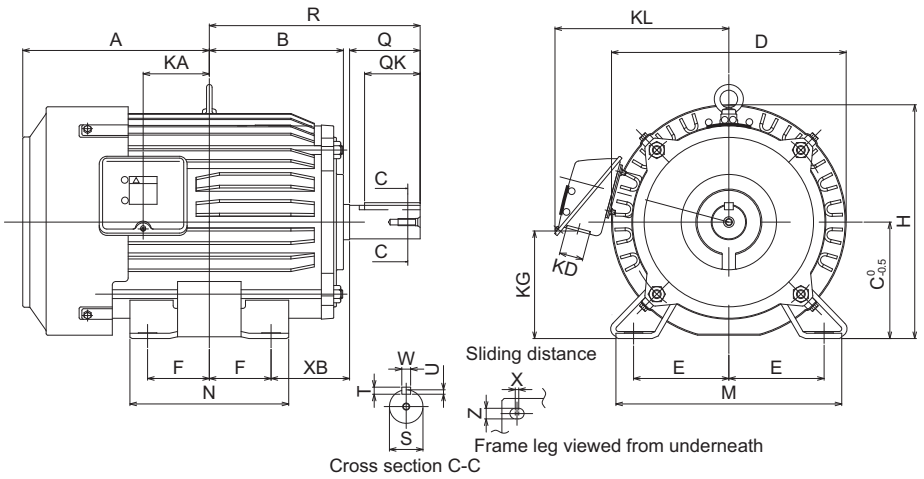

Model		Output (kW)	Frame No.	Outline dimension (mm)																						
				A	B	C	D	E	F	H	KA	KD	KG	KL	M	N	XB	Q	QK	R	S	T	U	W	X	Z
200V class MM-EFS[]1M	7	0.75	80M	122	95	80	161.6	62.5	50	164	39.5	27	63	145	160	125	50	40	32	140	ϕ19j6	6	3.5	6	15	9
	15	1.5	90L	143	110.5	90	183.6	70	62.5	182	53	27	76	158	175	150	56	50	40	168.5	ϕ24j6	7	4	8	15	9
	22	2.2	100L	173	128	100	207	80	70	203.5	65	27	88	169	200	180	63	60	45	193	ϕ28j6	7	4	8	4	12
	37	3.7	112M	181	135	112	228	95	70	226	69	27	103	180	230	180	70	60	45	200	ϕ28j6	7	4	8	4	12
	55	5.5	132S	211.5	152	132	266	108	70	265	75	27	120	197	256	180	89	80	63	239	ϕ38k6	8	5	10	4	12
	75	7.5	132M	230.5	171	132	266	108	89	265	94	27	120	197	256	218	89	80	63	258	ϕ38k6	8	5	10	4	12
400V class MM-EFS[]1M4	11K	11	160M	252	198	160	318	127	105	316	105	56	142	266	310	254	108	110	90	323	ϕ42k6	8	5	12	4	14.5
	15K	15	160L	274	220	160	318	127	127	316	127	56	142	266	310	298	108	110	90	345	ϕ42k6	8	5	12	4	14.5
	18K	18.5	180M	292.5	225.5	180	363	139.5	120.5	359	127	56	168	289	335	285	121	110	90	351.5	ϕ48k6	9	5.5	14	4	14.5
	22K	22																								
	30K	30	180L	311.5	242.5	180	363	139.5	139.5	359	146	56	168	289	335	323	121	110	90	370.5	ϕ55m6	10	6	16	4	14.5

• 37K to 55K

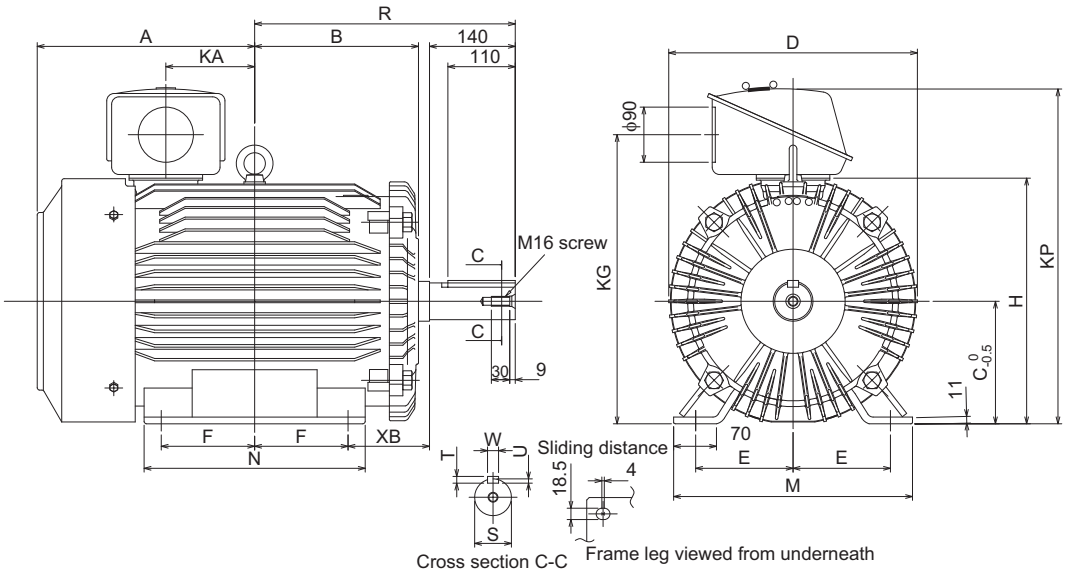

Model		Output (kW)	Frame No.	Outline dimension (mm)																
				A	B	C	D	E	F	H	KA	KG	KP	M	N	XB	R	S	T	U	W
200V class MM-EFS[]1M	37K	37	200L	355	267.5	200	406	159	152.5	401	145	472	548	390	361	133	425.5	ϕ60m6	11	7	18
	45K	45																		
400V class MM-EFS[]1M4	55K	55	225S	365	277	225	446	178	143	446	145	517	593	428	342	149	432	ϕ65m6	11	7	18

NOTE

• The drawings shown above are sample outline dimension drawings. The outer appearance may differ depending on the frame number.

◆Premium high-efficiency IPM motor [MM-THE4 (1500 r/min) series]

• 75kW

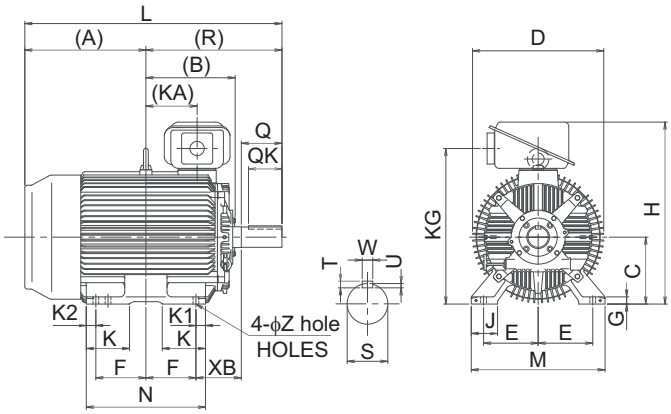

Frame No.	Outline dimension (mm)																								
	A	B	C	D	E	F	G	H	J	KA	KG	K	K1	K2	L	M	N	Z	XB	Q	QK	R	S	T	U	W
250MA	449.5	317	250	490	203	174.5	30	692	100	157.5	583	168	50	50	932	486	449	24	168	140	110	482.5	75m6	12	7.5	20

• 90kW

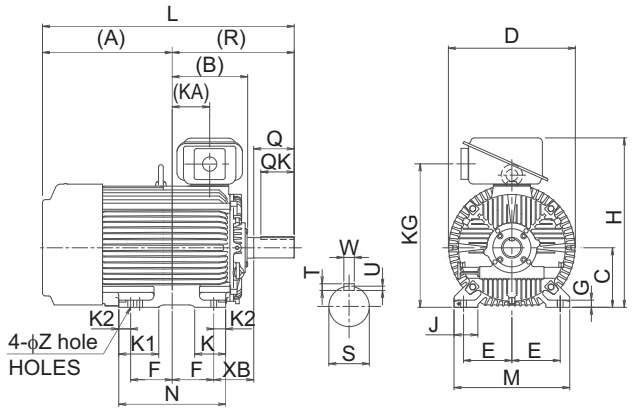

Frame No.	Outline dimension (mm)																								
	A	B	C	D	E	F	G	H	J	KA	KG	K	K1	K2	L	M	N	Z	XB	Q	QK	R	S	T	U	W
250MD	545.5	317	250	535	203	174.5	30	712	100	157.5	603	130	168	50	1028	486	449	24	168	140	110	482.5	75m6	12	7.5	20

• 110kW, 132kW, 160kW

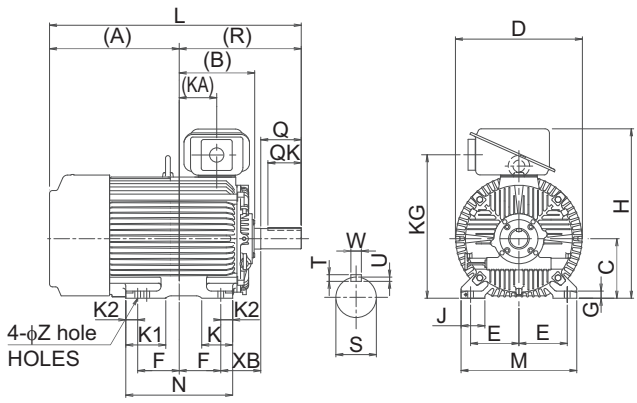

Frame No.	Outline dimension (mm)																								
	A	B	C	D	E	F	G	H	J	KA	KG	K	K1	K2	L	M	N	Z	XB	Q	QK	R	S	T	U	W
280MD	596.5	374	280	587	228.5	209.5	30	782	110	210.5	673	130	181	40	1166	560	499	24	190	170	140	569.5	85m6	14	9	22

NOTE

- The drawings shown above are sample outline dimension drawings. The outer appearance may differ depending on the frame number.
- For the 200 V class, models with capacities up to 75 kW are available.

MEMO

APPENDIX

APPENDIX provides the reference information for use of this product. Refer to APPENDIX as required.

Appendix1 For customers replacing the conventional model with this inverter 594

Appendix2 Specification comparison between PM motor control and induction motor control.....596

Appendix3 Parameters (functions) and instruction codes under different control methods 597

Appendix4 For customers using HMS network options 610

Appendix1 For customers replacing the conventional model with this inverter

Appendix1.1 Replacement of the FR-F700(P) series

◆Differences and compatibility with the FR-F700(P) series

Item	FR-F700(P)	FR-F800
Control method	V/F control Simple magnetic flux vector control IPM motor control	V/F control Advanced magnetic flux vector control PM motor control (IPM motor/SPM motor)
Added functions	—	USB host function Safety stop function etc.
Maximum output frequency V/F control	400 Hz	590 Hz
PID control	Turn the X14 signal ON to enable PID control.	The X14 signal does not need to be assigned. (PID control is available by the **Pr.128** setting.)
Automatic restart after instantaneous power failure	Turn the CS signal ON to enable restart. **Pr.186 CS terminal function selection** initial value "6"	CS signal assignment not required. (Restart is enabled with the **Pr.57** setting only.) **Pr.186 CS terminal function selection** initial value "9999"
PTC thermistor input	Input from the terminal AU (The function of the terminal AU is switched by a switch.)	Input from the terminal 2. (The function of the terminal 2 is switched by the **Pr.561** setting.)
USB connector	Not used	USB host: A connector USB device: mini B connector
Main circuit terminal screw size	Terminals R/L1, S/L2, T/L3, U, V, W: Same for all capacities Terminals P/+, N/-, P1: Same except for the 400 V class 01800(75K) (FR-F740(P)-01800(75K): M10, FR-F840-01800(75K): M8) Screws for earthing (grounding): Same except for the 200 V class 03160(75K) (FR-F720(P)-03160(75K): M10, FR-F820-03160(75K): M8)	
Control circuit terminal block	Removable terminal block (screw type)	Removable terminal block (spring clamp type)
Terminal response level	The FR-F800's I/O terminals have better response level than the FR-F700(P)'s terminals. By setting **Pr.289 Inverter output terminal filter** and **Pr.699 Input terminal filter**, the terminal response level can be compatible with that of FR-F700(P). Set to approximately 5 to 8 ms and adjust the setting according to the system.	
PU	FR-DU07 (4-digit LED) FR-PU07	FR-DU08 (5-digit LED) FR-LU08 (LCD) FR-PU07 (Some functions, such as parameter copy, are unavailable.) FR-DU07 is not supported.
Plug-in option	Dedicated plug-in options (not interchangeable)	
Plug-in option connector	One connector (FR-F700P, FR-F700-CHT) Two connectors (FR-F700-NA/EC)	Three connectors
Communication option	Connected to the connector 1. (FR-F700P, FR-F700-CHT) Connected to the connector 2. (FR-F700-NA/EC)	Connected to the connector 1.
Installation size	Installation size is compatible for standard models. (Replacement between the same capacities does not require new mounting holes. However, for the 200 V class 03160(75K), the installation interchange attachment (FR-F8AT) is required.) For separated converter types, installation size is not compatible. (New mounting holes are required.)	
Converter	Built-in for all capacities	An optional converter unit (FR-CC2) is required for separated converter types.
DC reactor	The 75K or higher comes with a DC reactor (FR-HEL).	For the FR-F820-03160(75K) or higher, the FR-F840-01800(75K) or higher, select a DC reactor suitable for the applicable motor capacity. (A DC reactor is not included.) Separated converter types (converter unit FR-CC2) have a built-in DC reactor.

◆Installation precautions

- Removal procedure of the front cover is different. (Refer to page 22.)
- Plug-in options of the FR-F700(P) series are not compatible.
- Operation panel (FR-DU07) cannot be used.

◆Wiring precautions

- The spring clamp type terminal block has changed to the screw type. Use of blade terminals is recommended.

◆Instructions for continuous use of the FR-PU07 (parameter unit)

- For the FR-F800 series, many functions (parameters) have been added. When setting these parameters, the parameter names and setting ranges are not displayed.
- Only the parameter with the numbers up to "999" can be read and set. The parameters with the numbers after "999" cannot be read or set.
- Many protective functions have been added for the FR-F800 series. These functions are available, but all faults are displayed as "Fault".When the faults history is checked, "ERR" appears. Added faults will not appear on the parameter unit. (However, MT1 to MT3 are displayed as MT.)
- Parameter copy/verification function are not available.

◆Copying parameter settings

- The FR-F700(P) series' parameter settings can be easily copied to the FR-F800 series by using the setup software (FR Configurator2). (Not supported by the setup software FR-SW3-SETUP or older.)

Appendix1.2 Replacement of the FR-F500(L) series

◆Installation precautions

Installation size is compatible for replacing the FR-F520(L)-0.75K, 2.2K, 3.7K,7.5K, 18.5K, 22K, 37K, 45K, 90K, 110K, FR-F540(L)-0.75K to 3.7K, 7.5K, 11K, 22K, 37K to 55K, 132K to 280K. New mounting holes are required for replacing models with other capacities. (For the 55K or lower, the installation interchange attachment can be used.)

NOTE

- For the installation size and the outline dimensions of the separated converter type, refer to the FR-F802 (Separated Converter Type) Instruction Manual (Hardware).

Appendix2 Specification comparison between PM motor control and induction motor control

Item		PM motor control	Induction motor control
Applicable motor		Premium high-efficiency IPM motor MM-EFS, MM-THE4 series (the same capacity as the inverter capacity)	General-purpose motor SF-JR, SF-PR series, etc.*1
Number of connectable motors		1: 1	Several motors can be driven under V/F control.
Number of motor poles		MM-EFS 15 kW or lower: 6 poles MM-THE4: 6 poles MM-EFS 18.5 kW or higher: 8 poles	Normally 2, 4, or 6 poles.
Rated motor frequency		MM-EFS 15 kW or lower: 75 Hz MM-THE4: 75 Hz MM-EFS 18.5 kW or higher: 100 Hz	Normally 50 Hz or 60 Hz
Maximum output frequency		MM-EFS 15 kW or lower: 112.5 Hz (2250 r/min with 6P) MM-EFS 18.5 kW or higher: 150 Hz (2250 r/min with 8P) MM-THE4: 90 Hz (1800 r/min with 6P)	590 Hz (17700 r/min with 4P) (Set the upper limit frequency (**Pr.0, Pr.18**) according to the motor and machine specifications.)
Permissible load		120% 60 s, 150% 3 s (inverse-time characteristics) (The % value is a ratio to the rated motor current.)	120% 60 s, 150% 3 s (inverse-time characteristics) (The % value is a ratio to the rated inverter current.)
Maximum starting torque		50%	120% (Advanced magnetic flux vector control)
Frequency setting resolution	Analog input	0.018 Hz / 0 to 75 Hz (1500 r/min) / 0.025 Hz /0 to 100 Hz (1500 r/min) (0 to 10 V/12 bits)*2 0.036 Hz / 0 to 75 Hz (1500 r/min) / 0.05 Hz / 0 to 100 Hz (1500 r/min) (0 to 5 V/11 bits, 0 to 20 mA/11bits, 0 to ±10 V/12 bits)*2 0.072 Hz / 0 to 75 Hz (1500 r/min) / 0.1 Hz /0 to 100 Hz (1500 r/min) (0 to ±5 V/11 bits)*2	0.015 Hz / 0 to 60 Hz (1800 r/min with 4P) (0 to 10 V/12 bits) 0.03 Hz / 0 to 60 Hz (1800 r/min with 4P) (0 to 5 V/11 bits, 0 to 20 mA/11 bits, 0 to ±10 V/12 bits) 0.06 Hz / 0 to 60 Hz (1800 r/min with 4P) (0 to ±5 V/11 bits)
Output signal	Pulse output for meter	In the initial setting, 1 mA is output at the rated motor frequency from across terminals FM and SD. (SD is a common terminal.) The permissible frequency load current is 2 mA. Pulse specification: 1440 pulses/s at the rated motor frequency	In the initial setting, 1 mA is output at 60 Hz from across terminals FM and SD. (SD is a common terminal.) The permissible frequency load current is 2 mA. Pulse specification: 1440 pulses/s at 60 Hz
Carrier frequency		Four patterns of 2 kHz, 6 kHz, 10 kHz, and 14 kHz*3	Selectable between 0.75 kHz to 14.5 kHz*3
		Two patterns of 2 kHz and 6 kHz*4	0.75 kHz to 6 kHz*4
Automatic restart after instantaneous power failure		No startup waiting time. Using the regeneration avoidance function together is recommended.	Startup waiting time exists.
Startup delay		Startup delay of about 0.1 s for initial tuning.	No startup delay.
Driving by the commercial power supply		Not available Never connect an IPM motor to the commercial power supply.	Can be driven by the commercial power supply.
Operation during motor coasting		While the motor is coasting, potential is generated across motor terminals. Before wiring, make sure that the motor is stopped.	While the motor is coasting, no potential is generated across motor terminals.
Maximum motor wiring length		100 m or shorter	Overall length: 500 m or shorter

*1 For the motor capacity, the rated motor current should be equal to or less than the rated inverter current. (It must be 0.4 kW or higher.)
If a motor with substantially low rated current compared with the rated inverter current is used, speed and torque accuracies may deteriorate due to torque ripples, etc. Set the rated motor current to 40% or higher of the rated inverter current.

*2 The values differ for the 15K and lower capacity premium high-efficiency IPM motor, which requires 6 poles to run at the rated motor speed (1500 r/min), or for 18K and higher, which requires 8 poles to run at the speed.

*3 For the FR-F820-02330(55K) or lower and the FR-F840-01160(55K) or lower

*4 For the FR-F820-03160(75K) or higher and the FR-F840-01800(75K) or higher

NOTE

- Before wiring, make sure that the motor is stopped. Otherwise you may get an electric shock.
- Never connect an IPM motor to the commercial power supply.
- No slippage occurs with an IPM motor because of its characteristic. If an IPM motor, which took over an induction motor, is driven at the same frequency as for the general-purpose motor, the rotation speed of the IPM motor becomes faster by the amount of the general-purpose motor's slippage. Adjust the speed command to run the IPM motor at the same speed as the induction motor, as required.

Appendix3 Parameters (functions) and instruction codes under different control methods

∗1 Instruction codes are used to read and write parameters in accordance with the Mitsubishi inverter protocol of RS-485 communication. (For RS-485 communication, refer to page 449.)

∗2 Function availability under each control method is shown as below:
O: Available
×: Not available

∗3 For "parameter copy", "parameter clear", and "all parameter clear", "O" indicates the function is available, and "×" indicates the function is not available.

∗4 These parameters are not cleared by the parameter clear (all parameter clear) command, which are sent through RS-485 communication. (For RS-485 communication, refer to page 449.)

∗5 When a communication option is installed, parameter clear (lock release) during password lock (**Pr.297** ≠ "9999") can be performed only from the communication option.

∗6 Reading and writing via the PU connector are available.

Symbols in the table indicate parameters that operate when the options are connected.

AR FR-A8AR, AX FR-A8AX, AY FR-A8AY, NC FR-A8NC, NCE FR-A8NCE, ND FR-A8ND, NP FR-A8NP

Pr.	Name	Instruction code∗1			Control method∗2			Parameter		
		Read	Write	Extended	V/F	Magnetic flux	PM	Copy∗3	Clear∗3	All clear∗3
0	Torque boost	00	80	0	O	×	×	O	O	O
1	Maximum frequency	01	81	0	O	O	O	O	O	O
2	Minimum frequency	02	82	0	O	O	O	O	O	O
3	Base frequency	03	83	0	O	×	×	O	O	O
4	Multi-speed setting (high speed)	04	84	0	O	O	O	O	O	O
5	Multi-speed setting (middle speed)	05	85	0	O	O	O	O	O	O
6	Multi-speed setting (low speed)	06	86	0	O	O	O	O	O	O
7	Acceleration time	07	87	0	O	O	O	O	O	O
8	Deceleration time	08	88	0	O	O	O	O	O	O
9	Electronic thermal O/L relay	09	89	0	O	O	O	O	O	O
10	DC injection brake operation frequency	0A	8A	0	O	O	O	O	O	O
11	DC injection brake operation time	0B	8B	0	O	O	O	O	O	O
12	DC injection brake operation voltage	0C	8C	0	O	O	×	O	O	O
13	Starting frequency	0D	8D	0	O	O	O	O	O	O
14	Load pattern selection	0E	8E	0	O	×	×	O	O	O
15	Jog frequency	0F	8F	0	O	O	O	O	O	O
16	Jog acceleration/deceleration time	10	90	0	O	O	O	O	O	O
17	MRS input selection	11	91	0	O	O	O	O	O	O
18	High speed maximum frequency	12	92	0	O	O	O	O	O	O
19	Base frequency voltage	13	93	0	O	×	×	O	O	O
20	Acceleration/deceleration reference frequency	14	94	0	O	O	O	O	O	O
21	Acceleration/deceleration time increments	15	95	0	O	O	O	O	O	O
22	Stall prevention operation level	16	96	0	O	O	O	O	O	O
23	Stall prevention operation level compensation factor at double speed	17	97	0	O	O	×	O	O	O
24	Multi-speed setting (speed 4)	18	98	0	O	O	O	O	O	O
25	Multi-speed setting (speed 5)	19	99	0	O	O	O	O	O	O
26	Multi-speed setting (speed 6)	1A	9A	0	O	O	O	O	O	O
27	Multi-speed setting (speed 7)	1B	9B	0	O	O	O	O	O	O
28	Multi-speed input compensation selection	1C	9C	0	O	O	O	O	O	O
29	Acceleration/deceleration pattern selection	1D	9D	0	O	O	O	O	O	O
30	Regenerative function selection	1E	9E	0	O	O	O	O	O	O
31	Frequency jump 1A	1F	9F	0	O	O	O	O	O	O
32	Frequency jump 1B	20	A0	0	O	O	O	O	O	O
33	Frequency jump 2A	21	A1	0	O	O	O	O	O	O
34	Frequency jump 2B	22	A2	0	O	O	O	O	O	O
35	Frequency jump 3A	23	A3	0	O	O	O	O	O	O
36	Frequency jump 3B	24	A4	0	O	O	O	O	O	O
37	Speed display	25	A5	0	O	O	O	O	O	O

Pr.	Name	Instruction code*1			Control method*2			Parameter		
		Read	Write	Extended	V/F	Magnetic flux	PM	Copy*3	Clear*3	All clear*3
41	Up-to-frequency sensitivity	29	A9	0	O	O	O	O	O	O
42	Output frequency detection	2A	AA	0	O	O	O	O	O	O
43	Output frequency detection for reverse rotation	2B	AB	0	O	O	O	O	O	O
44	Second acceleration/deceleration time	2C	AC	0	O	O	O	O	O	O
45	Second deceleration time	2D	AD	0	O	O	O	O	O	O
46	Second torque boost	2E	AE	0	O	×	×	O	O	O
47	Second V/F (base frequency)	2F	AF	0	O	×	×	O	O	O
48	Second stall prevention operation level	30	B0	0	O	O	×	O	O	O
49	Second stall prevention operation frequency	31	B1	0	O	O	×	O	O	O
50	Second output frequency detection	32	B2	0	O	O	O	O	O	O
51	Second electronic thermal O/L relay	33	B3	0	O	O	O	O	O	O
52	Operation panel main monitor selection	34	B4	0	O	O	O	O	O	O
54	FM/CA terminal function selection	36	B6	0	O	O	O	O	O	O
55	Frequency monitoring reference	37	B7	0	O	O	O	O	O	O
56	Current monitoring reference	38	B8	0	O	O	O	O	O	O
57	Restart coasting time	39	B9	0	O	O	O	O	O	O
58	Restart cushion time	3A	BA	0	O	O	×	O	O	O
59	Remote function selection	3B	BB	0	O	O	O	O	O	O
60	Energy saving control selection	3C	BC	0	O	O	×	O	O	O
65	Retry selection	41	C1	0	O	O	O	O	O	O
66	Stall prevention operation reduction starting frequency	42	C2	0	O	O	×	O	O	O
67	Number of retries at fault occurrence	43	C3	0	O	O	O	O	O	O
68	Retry waiting time	44	C4	0	O	O	O	O	O	O
69	Retry count display erase	45	C5	0	O	O	O	O	O	O
70	Parameter for manufacturer setting. Do not set.									
71	Applied motor	47	C7	0	O	O	O	O	O	O
72	PWM frequency selection	48	C8	0	O	O	O	O	O	O
73	Analog input selection	49	C9	0	O	O	O	O	O	O
74	Input filter time constant	4A	CA	0	O	O	O	O	O	O
75	Reset selection/disconnected PU detection/PU stop selection	4B	CB	0	O	O	O	O	×	×
76	Fault code output selection	4C	CC	0	O	O	O	O	O	O
77*6	Parameter write selection	4D	CD	0	O	O	O	O	O	O
78	Reverse rotation prevention selection	4E	CE	0	O	O	O	O	O	O
79*6	Operation mode selection	4F	CF	0	O	O	O	O	O	O
80	Motor capacity	50	D0	0	×	O	O	O	O	O
81	Number of motor poles	51	D1	0	×	O	O	O	O	O
82	Motor excitation current	52	D2	0	×	O	×	O	×	O
83	Rated motor voltage	53	D3	0	×	O	O	O	O	O
84	Rated motor frequency	54	D4	0	×	O	O	O	O	O
89	Speed control gain (Advanced magnetic flux vector)	59	D9	0	×	O	×	O	×	O
90	Motor constant (R1)	5A	DA	0	×	O	O	O	×	O
91	Motor constant (R2)	5B	DB	0	×	O	×	O	×	O
92	Motor constant (L1)/d-axis inductance (Ld)	5C	DC	0	×	O	O	O	×	O
93	Motor constant (L2)/q-axis inductance (Lq)	5D	DD	0	×	O	O	O	×	O
94	Motor constant (X)	5E	DE	0	×	O	×	O	×	O
95	Online auto tuning selection	5F	DF	0	×	O	×	O	O	O
96	Auto tuning setting/status	60	E0	0	×	O	O	O	×	O
100	V/F1 (first frequency)	00	80	1	O	×	×	O	O	O
101	V/F1 (first frequency voltage)	01	81	1	O	×	×	O	O	O
102	V/F2 (second frequency)	02	82	1	O	×	×	O	O	O
103	V/F2 (second frequency voltage)	03	83	1	O	×	×	O	O	O
104	V/F3 (third frequency)	04	84	1	O	×	×	O	O	O
105	V/F3 (third frequency voltage)	05	85	1	O	×	×	O	O	O
106	V/F4 (fourth frequency)	06	86	1	O	×	×	O	O	O
107	V/F4 (fourth frequency voltage)	07	87	1	O	×	×	O	O	O
108	V/F5 (fifth frequency)	08	88	1	O	×	×	O	O	O
109	V/F5 (fifth frequency voltage)	09	89	1	O	×	×	O	O	O
117	PU communication station number	11	91	1	O	O	O	O	O*4	O*4
118	PU communication speed	12	92	1	O	O	O	O	O*4	O*4

Pr.	Name	Instruction code*1			Control method*2			Parameter		
		Read	Write	Extended	V/F	Magnetic flux	PM	Copy*3	Clear*3	All clear*3
119	PU communication stop bit length / data length	13	93	1	○	○	○	○	○*4	○*4
120	PU communication parity check	14	94	1	○	○	○	○	○*4	○*4
121	Number of PU communication retries	15	95	1	○	○	○	○	○*4	○*4
122	PU communication check time interval	16	96	1	○	○	○	○	○*4	○*4
123	PU communication waiting time setting	17	97	1	○	○	○	○	○*4	○*4
124	PU communication CR/LF selection	18	98	1	○	○	○	○	○*4	○*4
125	Terminal 2 frequency setting gain frequency	19	99	1	○	○	○	○	×	○
126	Terminal 4 frequency setting gain frequency	1A	9A	1	○	○	○	○	×	○
127	PID control automatic switchover frequency	1B	9B	1	○	○	○	○	○	○
128	PID action selection	1C	9C	1	○	○	○	○	○	○
129	PID proportional band	1D	9D	1	○	○	○	○	○	○
130	PID integral time	1E	9E	1	○	○	○	○	○	○
131	PID upper limit	1F	9F	1	○	○	○	○	○	○
132	PID lower limit	20	A0	1	○	○	○	○	○	○
133	PID action set point	21	A1	1	○	○	○	○	○	○
134	PID differential time	22	A2	1	○	○	○	○	○	○
135	Electronic bypass sequence selection	23	A3	1	○	○	×	○	○	○
136	MC switchover interlock time	24	A4	1	○	○	×	○	○	○
137	Start waiting time	25	A5	1	○	○	×	○	○	○
138	Bypass selection at a fault	26	A6	1	○	○	×	○	○	○
139	Automatic switchover frequency from inverter to bypass operation	27	A7	1	○	○	×	○	○	○
140	Backlash acceleration stopping frequency	28	A8	1	○	○	○	○	○	○
141	Backlash acceleration stopping time	29	A9	1	○	○	○	○	○	○
142	Backlash deceleration stopping frequency	2A	AA	1	○	○	○	○	○	○
143	Backlash deceleration stopping time	2B	AB	1	○	○	○	○	○	○
144	Speed setting switchover	2C	AC	1	○	○	○	○	○	○
145	PU display language selection	2D	AD	1	○	○	○	○	×	×
147	Acceleration/deceleration time switching frequency	2F	AF	1	○	○	○	○	○	○
148	Stall prevention level at 0 V input	30	B0	1	○	○	×	○	○	○
149	Stall prevention level at 10 V input	31	B1	1	○	○	×	○	○	○
150	Output current detection level	32	B2	1	○	○	○	○	○	○
151	Output current detection signal delay time	33	B3	1	○	○	○	○	○	○
152	Zero current detection level	34	B4	1	○	○	○	○	○	○
153	Zero current detection time	35	B5	1	○	○	○	○	○	○
154	Voltage reduction selection during stall prevention operation	36	B6	1	○	○	×	○	○	○
155	RT signal function validity condition selection	37	B7	1	○	○	○	○	○	○
156	Stall prevention operation selection	38	B8	1	○	○	○	○	○	○
157	OL signal output timer	39	B9	1	○	○	○	○	○	○
158	AM terminal function selection	3A	BA	1	○	○	○	○	○	○
159	Automatic switchover frequency range from bypass to inverter operation	3B	BB	1	○	○	×	○	○	○
160	User group read selection	00	80	2	○	○	○	○	○	○
161	Frequency setting/key lock operation selection	01	81	2	○	○	○	○	×	○
162	Automatic restart after instantaneous power failure selection	02	82	2	○	○	○	○	○	○
163	First cushion time for restart	03	83	2	○	○	×	○	○	○
164	First cushion voltage for restart	04	84	2	○	○	×	○	○	○
165	Stall prevention operation level for restart	05	85	2	○	○	×	○	○	○
166	Output current detection signal retention time	06	86	2	○	○	○	○	○	○
167	Output current detection operation selection	07	87	2	○	○	○	○	○	○
168 169	Parameter for manufacturer setting. Do not set.									
170	Watt-hour meter clear	0A	8A	2	○	○	○	○	×	○
171	Operation hour meter clear	0B	8B	2	○	○	○	×	×	×
172	User group registered display/batch clear	0C	8C	2	○	○	○	×	×	×
173	User group registration	0D	8D	2	○	○	○	×	×	×
174	User group clear	0E	8E	2	○	○	○	×	×	×
178	STF terminal function selection	12	92	2	○	○	○	○	×	○
179	STR terminal function selection	13	93	2	○	○	○	○	×	○

Pr.	Name	Instruction code*1			Control method*2			Parameter		
		Read	Write	Extended	V/F	Magnetic flux	PM	Copy*3	Clear*3	All clear*3
180	RL terminal function selection	14	94	2	○	○	○	○	×	○
181	RM terminal function selection	15	95	2	○	○	○	○	×	○
182	RH terminal function selection	16	96	2	○	○	○	○	×	○
183	RT terminal function selection	17	97	2	○	○	○	○	×	○
184	AU terminal function selection	18	98	2	○	○	○	○	×	○
185	JOG terminal function selection	19	99	2	○	○	○	○	×	○
186	CS terminal function selection	1A	9A	2	○	○	○	○	×	○
187	MRS terminal function selection	1B	9B	2	○	○	○	○	×	○
188	STOP terminal function selection	1C	9C	2	○	○	○	○	×	○
189	RES terminal function selection	1D	9D	2	○	○	○	○	×	○
190	RUN terminal function selection	1E	9E	2	○	○	○	○	×	○
191	SU terminal function selection	1F	9F	2	○	○	○	○	×	○
192	IPF terminal function selection	20	A0	2	○	○	○	○	×	○
193	OL terminal function selection	21	A1	2	○	○	○	○	×	○
194	FU terminal function selection	22	A2	2	○	○	○	○	×	○
195	ABC1 terminal function selection	23	A3	2	○	○	○	○	×	○
196	ABC2 terminal function selection	24	A4	2	○	○	○	○	×	○
232	Multi-speed setting (speed 8)	28	A8	2	○	○	○	○	○	○
233	Multi-speed setting (speed 9)	29	A9	2	○	○	○	○	○	○
234	Multi-speed setting (speed 10)	2A	AA	2	○	○	○	○	○	○
235	Multi-speed setting (speed 11)	2B	AB	2	○	○	○	○	○	○
236	Multi-speed setting (speed 12)	2C	AC	2	○	○	○	○	○	○
237	Multi-speed setting (speed 13)	2D	AD	2	○	○	○	○	○	○
238	Multi-speed setting (speed 14)	2E	AE	2	○	○	○	○	○	○
239	Multi-speed setting (speed 15)	2F	AF	2	○	○	○	○	○	○
240	Soft-PWM operation selection	30	B0	2	○	○	○	○	○	○
241	Analog input display unit switchover	31	B1	2	○	○	○	○	○	○
242	Terminal 1 added compensation amount (terminal 2)	32	B2	2	○	○	○	○	○	○
243	Terminal 1 added compensation amount (terminal 4)	33	B3	2	○	○	○	○	○	○
244	Cooling fan operation selection	34	B4	2	○	○	○	○	○	○
245	Rated slip	35	B5	2	○	×	×	○	○	○
246	Slip compensation time constant	36	B6	2	○	×	×	○	○	○
247	Constant-power range slip compensation selection	37	B7	2	○	×	×	○	○	○
248	Self power management selection	38	B8	2	○	○	○	○	○	○
249	Earth (ground) fault detection at start	39	B9	2	○	○	×	○	○	○
250	Stop selection	3A	BA	2	○	○	○	○	○	○
251	Output phase loss protection selection	3B	BB	2	○	○	○	○	○	○
252	Override bias	3C	BC	2	○	○	○	○	○	○
253	Override gain	3D	BD	2	○	○	○	○	○	○
254	Main circuit power OFF waiting time	3E	BE	2	○	○	○	○	○	○
255	Life alarm status display	3F	BF	2	○	○	○	×	×	×
256	Inrush current limit circuit life display	40	C0	2	○	○	○	×	×	×
257	Control circuit capacitor life display	41	C1	2	○	○	○	×	×	×
258	Main circuit capacitor life display	42	C2	2	○	○	○	×	×	×
259	Main circuit capacitor life measuring	43	C3	2	○	○	○	○	○	○
260	PWM frequency automatic switchover	44	C4	2	○	○	○	○	○	○
261	Power failure stop selection	45	C5	2	○	○	○	○	○	○
262	Subtracted frequency at deceleration start	46	C6	2	○	○	○	○	○	○
263	Subtraction starting frequency	47	C7	2	○	○	○	○	○	○
264	Power-failure deceleration time 1	48	C8	2	○	○	○	○	○	○
265	Power-failure deceleration time 2	49	C9	2	○	○	○	○	○	○
266	Power failure deceleration time switchover frequency	4A	CA	2	○	○	○	○	○	○
267	Terminal 4 input selection	4B	CB	2	○	○	○	○	×	○
268	Monitor decimal digits selection	4C	CC	2	○	○	○	○	○	○
269	Parameter for manufacturer setting. Do not set.									
289	Inverter output terminal filter	61	E1	2	○	○	○	○	×	○
290	Monitor negative output selection	62	E2	2	○	○	○	○	○	○
291	Pulse train I/O selection	63	E3	2	○	○	○	○	×	○

Pr.	Name	Instruction code*1			Control method*2			Parameter		
		Read	Write	Extended	V/F	Magnetic flux	PM	Copy*3	Clear*3	All clear*3
294	UV avoidance voltage gain	66	E6	2	○	○	○	○	○	○
295	Frequency change increment amount setting	67	E7	2	○	○	○	○	○	○
296	Password lock level	68	E8	2	○	○	○	○	×	○
297	Password lock/unlock	69	E9	2	○	○	○	○	○*5	○
298	Frequency search gain	6A	EA	2	○	○	×	○	×	○
299	Rotation direction detection selection at restarting	6B	EB	2	○	○	×	○	○	○
300	BCD input bias AX	00	80	3	○	○	○	○	○	○
301	BCD input gain AX	01	81	3	○	○	○	○	○	○
302	BIN input bias AX	02	82	3	○	○	○	○	○	○
303	BIN input gain AX	03	83	3	○	○	○	○	○	○
304	Digital input and analog input compensation enable/disable selection AX	04	84	3	○	○	○	○	○	○
305	Read timing operation selection AX	05	85	3	○	○	○	○	○	○
306	Analog output signal selection AY	06	86	3	○	○	○	○	○	○
307	Setting for zero analog output AY	07	87	3	○	○	○	○	○	○
308	Setting for maximum analog output AY	08	88	3	○	○	○	○	○	○
309	Analog output signal voltage/current switchover AY	09	89	3	○	○	○	○	○	○
310	Analog meter voltage output selection AY	0A	8A	3	○	○	○	○	○	○
311	Setting for zero analog meter voltage output AY	0B	8B	3	○	○	○	○	○	○
312	Setting for maximum analog meter voltage output AY	0C	8C	3	○	○	○	○	○	○
313	DO0 output selection AY NC	0D	8D	3	○	○	○	○	×	○
314	DO1 output selection AY NC	0E	8E	3	○	○	○	○	×	○
315	DO2 output selection AY NC	0F	8F	3	○	○	○	○	×	○
316	DO3 output selection AY	10	90	3	○	○	○	○	×	○
317	DO4 output selection AY	11	91	3	○	○	○	○	×	○
318	DO5 output selection AY	12	92	3	○	○	○	○	×	○
319	DO6 output selection AY	13	93	3	○	○	○	○	×	○
320	RA1 output selection AR	14	94	3	○	○	○	○	×	○
321	RA2 output selection AR	15	95	3	○	○	○	○	×	○
322	RA3 output selection AR	16	96	3	○	○	○	○	×	○
323	AM0 0V adjustment AY	17	97	3	○	○	○	○	×	○
324	AM1 0mA adjustment AY	18	98	3	○	○	○	○	×	○
329	Digital input unit selection AX	1D	9D	3	○	○	○	○	×	○
331	RS-485 communication station number	1F	9F	3	○	○	○	○	○*4	○*4
332	RS-485 communication speed	20	A0	3	○	○	○	○	○*4	○*4
333	RS-485 communication stop bit length / data length	21	A1	3	○	○	○	○	○*4	○*4
334	RS-485 communication parity check selection	22	A2	3	○	○	○	○	○*4	○*4
335	RS-485 communication retry count	23	A3	3	○	○	○	○	○*4	○*4
336	RS-485 communication check time interval	24	A4	3	○	○	○	○	○*4	○*4
337	RS-485 communication waiting time setting	25	A5	3	○	○	○	○	○*4	○*4
338	Communication operation command source	26	A6	3	○	○	○	○	○*4	○*4
339	Communication speed command source	27	A7	3	○	○	○	○	○*4	○*4
340	Communication startup mode selection	28	A8	3	○	○	○	○	○*4	○*4
341	RS-485 communication CR/LF selection	29	A9	3	○	○	○	○	○*4	○*4
342	Communication EEPROM write selection	2A	AA	3	○	○	○	○	○	○
343	Communication error count	2B	AB	3	○	○	○	×	×	×
345	DeviceNet address ND	2D	AD	3	○	○	○	○	○*4	○*4
346	DeviceNet baud rate ND	2E	AE	3	○	○	○	○	○*4	○*4
349	Communication reset selection NC ND NP	31	B1	3	○	○	○	○	○*4	○*4
374	Overspeed detection level	4A	CA	3	×	×	○	○	○	○
384	Input pulse division scaling factor	54	D4	3	○	○	○	○	○	○
385	Frequency for zero input pulse	55	D5	3	○	○	○	○	○	○
386	Frequency for maximum input pulse	56	D6	3	○	○	○	○	○	○

Pr.	Name	Instruction code*1			Control method*2			Parameter		
		Read	Write	Extended	V/F	Magnetic flux	PM	Copy*3	Clear*3	All clear*3
390	% setting reference frequency	5A	DA	3	○	○	○	○	○	○
414	PLC function operation selection	0E	8E	4	○	○	○	○	×	×
415	Inverter operation lock mode setting	0F	8F	4	○	○	○	○	○	○
416	Pre-scale function selection	10	90	4	○	○	○	○	○	○
417	Pre-scale setting value	11	91	4	○	○	○	○	○	○
418	Extension output terminal filter AY AR	12	92	4	○	○	○	○	×	○
434	IP address 1 NCE	22	A2	4	○	○	○	○	○*4	○*4
435	IP address 2 NCE	23	A3	4	○	○	○	○	○*4	○*4
450	Second applied motor	32	B2	4	○	○	○	○	○	○
453	Second motor capacity	35	B5	4	×	○	○	○	○	○
454	Number of second motor poles	36	B6	4	×	○	○	○	○	○
455	Second motor excitation current	37	B7	4	×	○	×	○	×	○
456	Rated second motor voltage	38	B8	4	×	○	○	○	○	○
457	Rated second motor frequency	39	B9	4	×	○	○	○	○	○
458	Second motor constant (R1)	3A	BA	4	×	○	○	○	×	○
459	Second motor constant (R2)	3B	BB	4	×	○	○	○	×	○
460	Second motor constant (L1) / d-axis inductance (Ld)	3C	BC	4	×	○	○	○	×	○
461	Second motor constant (L2) / q-axis inductance (Lq)	3D	BD	4	×	○	○	○	×	○
462	Second motor constant (X)	3E	BE	4	×	○	×	○	×	○
463	Second motor auto tuning setting/status	3F	BF	4	×	○	○	○	×	○
495	Remote output selection	5F	DF	4	○	○	○	○	○	○
496	Remote output data 1	60	E0	4	○	○	○	×	×	×
497	Remote output data 2	61	E1	4	○	○	○	×	×	×
498	PLC function flash memory clear	62	E2	4	○	○	○	×	×	×
500	Communication error execution waiting time NC NCE ND NP	00	80	5	○	○	○	○	○	○
501	Communication error occurrence count display NC NCE ND NP	01	81	5	○	○	○	×	○	○
502	Stop mode selection at communication error	02	82	5	○	○	○	○	○	○
503	Maintenance timer 1	03	83	5	○	○	○	×	×	×
504	Maintenance timer 1 warning output set time	04	84	5	○	○	○	○	×	○
505	Speed setting reference	05	85	5	○	○	○	○	○	○
514	Emergency drive dedicated waiting time	0E	8E	5	○	○	○	○	×	○
515	Emergency drive dedicated retry count	0F	8F	5	○	○	○	○	×	○
522	Output stop frequency	16	96	5	○	○	○	○	○	○
523	Emergency drive mode selection	17	97	5	○	○	○	○	×	○
524	Emergency drive running speed	18	98	5	○	○	○	○	×	○
539	Modbus-RTU communication check time interval	27	A7	5	○	○	○	○	○*4	○*4
541	Frequency command sign selection NC NCE NP	29	A9	5	○	○	○	○	○*4	○*4
542	Communication station number (CC-Link) NC	2A	AA	5	○	○	○	○	○*4	○*4
543	Baud rate selection (CC-Link) NC	2B	AB	5	○	○	○	○	○*4	○*4
544	CC-Link extended setting NC	2C	AC	5	○	○	○	○	○*4	○*4
547	USB communication station number	2F	AF	5	○	○	○	○	○*4	○*4
548	USB communication check time interval	30	B0	5	○	○	○	○	○*4	○*4
549	Protocol selection	31	B1	5	○	○	○	○	○*4	○*4
550	NET mode operation command source selection	32	B2	5	○	○	○	○	○*4	○*4
551	PU mode operation command source selection	33	B3	5	○	○	○	○	○*4	○*4
552	Frequency jump range	34	B4	5	○	○	○	○	○	○
553	PID deviation limit	35	B5	5	○	○	○	○	○	○
554	PID signal operation selection	36	B6	5	○	○	○	○	○	○
555	Current average time	37	B7	5	○	○	○	○	○	○
556	Data output mask time	38	B8	5	○	○	○	○	○	○
557	Current average value monitor signal output reference current	39	B9	5	○	○	○	○	○	○
560	Second frequency search gain	3C	BC	5	○	○	×	○	×	○
561	PTC thermistor protection level	3D	BD	5	○	○	○	○	×	○
563	Energization time carrying-over times	3F	BF	5	○	○	○	×	×	×
564	Operating time carrying-over times	40	C0	5	○	○	○	×	×	×

Pr.	Name	Instruction code*1			Control method*2			Parameter		
		Read	Write	Extended	V/F	Magnetic flux	PM	Copy*3	Clear*3	All clear*3
569	Second motor speed control gain	45	C5	5	×	○	×	○	×	○
570	Multiple rating setting	46	C6	5	○	○	○	○	×	×
571	Holding time at a start	47	C7	5	○	○	×	○	○	○
573	4 mA input check selection	49	C9	5	○	○	○	○	○	○
574	Second motor online auto tuning	4A	CA	5	×	○	×	○	○	○
575	Output interruption detection time	4B	CB	5	○	○	○	○	○	○
576	Output interruption detection level	4C	CC	5	○	○	○	○	○	○
577	Output interruption cancel level	4D	CD	5	○	○	○	○	○	○
578	Auxiliary motor operation selection	4E	CE	5	○	○	○	○	○	○
579	Motor connection function selection	4F	CF	5	○	○	○	○	○	○
580	MC switching interlock time	50	D0	5	○	○	○	○	○	○
581	Start waiting time	51	D1	5	○	○	○	○	○	○
582	Auxiliary motor connection-time deceleration time	52	D2	5	○	○	○	○	○	○
583	Auxiliary motor disconnection-time acceleration time	53	D3	5	○	○	○	○	○	○
584	Auxiliary motor 1 starting frequency	54	D4	5	○	○	○	○	○	○
585	Auxiliary motor 2 starting frequency	55	D5	5	○	○	○	○	○	○
586	Auxiliary motor 3 starting frequency	56	D6	5	○	○	○	○	○	○
587	Auxiliary motor 1 stopping frequency	57	D7	5	○	○	○	○	○	○
588	Auxiliary motor 2 stopping frequency	58	D8	5	○	○	○	○	○	○
589	Auxiliary motor 3 stopping frequency	59	D9	5	○	○	○	○	○	○
590	Auxiliary motor start detection time	5A	DA	5	○	○	○	○	○	○
591	Auxiliary motor stop detection time	5B	DB	5	○	○	○	○	○	○
592	Traverse function selection	5C	DC	5	○	○	○	○	○	○
593	Maximum amplitude amount	5D	DD	5	○	○	○	○	○	○
594	Amplitude compensation amount during deceleration	5E	DE	5	○	○	○	○	○	○
595	Amplitude compensation amount during acceleration	5F	DF	5	○	○	○	○	○	○
596	Amplitude acceleration time	60	E0	5	○	○	○	○	○	○
597	Amplitude deceleration time	61	E1	5	○	○	○	○	○	○
598	Undervoltage level	62	E2	5	○	○	×	○	○	○
599	X10 terminal input selection	63	E3	5	○	○	○	○	○	○
600	First free thermal reduction frequency 1	00	80	6	○	○	○	○	○	○
601	First free thermal reduction ratio 1	01	81	6	○	○	○	○	○	○
602	First free thermal reduction frequency 2	02	82	6	○	○	○	○	○	○
603	First free thermal reduction ratio 2	03	83	6	○	○	○	○	○	○
604	First free thermal reduction frequency 3	04	84	6	○	○	○	○	○	○
606	Power failure stop external signal input selection	06	86	6	○	○	○	○	○	○
607	Motor permissible load level	07	87	6	○	○	○	○	○	○
608	Second motor permissible load level	08	88	6	○	○	○	○	○	○
609	PID set point/deviation input selection	09	89	6	○	○	○	○	○	○
610	PID measured value input selection	0A	8A	6	○	○	○	○	○	○
611	Acceleration time at a restart	0B	8B	6	○	○	○	○	○	○
653	Speed smoothing control	35	B5	6	○	○	×	○	○	○
654	Speed smoothing cutoff frequency	36	B6	6	○	○	×	○	○	○
655	Analog remote output selection	37	B7	6	○	○	○	○	○	○
656	Analog remote output 1	38	B8	6	○	○	○	×	×	×
657	Analog remote output 2	39	B9	6	○	○	○	×	×	×
658	Analog remote output 3	3A	BA	6	○	○	○	×	×	×
659	Analog remote output 4	3B	BB	6	○	○	○	×	×	×
660	Increased magnetic excitation deceleration operation selection	3C	BC	6	○	○	×	○	○	○
661	Magnetic excitation increase rate	3D	BD	6	○	○	×	○	○	○
662	Increased magnetic excitation current level	3E	BE	6	○	○	×	○	○	○
663	Control circuit temperature signal output level	3F	BF	6	○	○	○	○	○	○
665	Regeneration avoidance frequency gain	41	C1	6	○	○	○	○	○	○
668	Power failure stop frequency gain	44	C4	6	○	○	○	○	○	○
673	SF-PR slip amount adjustment operation selection	49	C9	6	○	×	×	○	○	○
674	SF-PR slip amount adjustment gain	4A	CA	6	○	×	×	○	○	○
684	Tuning data unit switchover	54	D4	6	×	○	○	○	○	○
686	Maintenance timer 2	56	D6	6	○	○	○	×	×	×
687	Maintenance timer 2 warning output set time	57	D7	6	○	○	○	○	×	○

Pr.	Name	Instruction code*1			Control method*2			Parameter		
		Read	Write	Extended	V/F	Magnetic flux	PM	Copy*3	Clear*3	All clear*3
688	Maintenance timer 3	58	D8	6	O	O	O	×	×	×
689	Maintenance timer 3 warning output set time	59	D9	6	O	O	O	O	×	O
692	Second free thermal reduction frequency 1	5C	DC	6	O	O	O	O	O	O
693	Second free thermal reduction ratio 1	5D	DD	6	O	O	O	O	O	O
694	Second free thermal reduction frequency 2	5E	DE	6	O	O	O	O	O	O
695	Second free thermal reduction ratio 2	5F	DF	6	O	O	O	O	O	O
696	Second free thermal reduction frequency 3	60	E0	6	O	O	O	O	O	O
699	Input terminal filter	63	E3	6	O	O	O	O	×	O
702	Maximum motor frequency	02	82	7	×	×	O	O	O	O
706	Induced voltage constant (phi f)	06	86	7	×	×	O	O	×	O
707	Motor inertia (integer)	07	87	7	×	×	O	O	O	O
711	Motor Ld decay ratio	0B	8B	7	×	×	O	O	×	O
712	Motor Lq decay ratio	0C	8C	7	×	×	O	O	×	O
717	Starting resistance tuning compensation	11	91	7	×	×	O	O	×	O
721	Starting magnetic pole position detection pulse width	15	95	7	×	×	O	O	×	O
724	Motor inertia (exponent)	18	98	7	×	×	O	O	O	O
725	Motor protection current level	19	99	7	×	×	O	O	O	O
726	Auto Baudrate/Max Master	1A	9A	7	O	O	O	O	O*4	O*4
727	Max Info Frames	1B	9B	7	O	O	O	O	O*4	O*4
728	Device instance number (Upper 3 digits)	1C	9C	7	O	O	O	O	O*4	O*4
729	Device instance number (Lower 4 digits)	1D	9D	7	O	O	O	O	O*4	O*4
738	Second motor induced voltage constant (phi f)	26	A6	7	×	×	O	O	×	O
739	Second motor Ld decay ratio	27	A7	7	×	×	O	O	×	O
740	Second motor Lq decay ratio	28	A8	7	×	×	O	O	×	O
741	Second starting resistance tuning compensation	29	A9	7	×	×	O	O	×	O
742	Second motor magnetic pole detection pulse width	2A	AA	7	×	×	O	O	×	O
743	Second motor maximum frequency	2B	AB	7	×	×	O	O	O	O
744	Second motor inertia (integer)	2C	AC	7	×	×	O	O	O	O
745	Second motor inertia (exponent)	2D	AD	7	×	×	O	O	O	O
746	Second motor protection current level	2E	AE	7	×	×	O	O	O	O
753	Second PID action selection	35	B5	7	O	O	O	O	O	O
754	Second PID control automatic switchover frequency	36	B6	7	O	O	O	O	O	O
755	Second PID action set point	37	B7	7	O	O	O	O	O	O
756	Second PID proportional band	38	B8	7	O	O	O	O	O	O
757	Second PID integral time	39	B9	7	O	O	O	O	O	O
758	Second PID differential time	3A	BA	7	O	O	O	O	O	O
759	PID unit selection	3B	BB	7	O	O	O	O	O	O
760	Pre-charge fault selection	3C	BC	7	O	O	O	O	O	O
761	Pre-charge ending level	3D	BD	7	O	O	O	O	O	O
762	Pre-charge ending time	3E	BE	7	O	O	O	O	O	O
763	Pre-charge upper detection level	3F	BF	7	O	O	O	O	O	O
764	Pre-charge time limit	40	C0	7	O	O	O	O	O	O
765	Second pre-charge fault selection	41	C1	7	O	O	O	O	O	O
766	Second pre-charge ending level	42	C2	7	O	O	O	O	O	O
767	Second pre-charge ending time	43	C3	7	O	O	O	O	O	O
768	Second pre-charge upper detection level	44	C4	7	O	O	O	O	O	O
769	Second pre-charge time limit	45	C5	7	O	O	O	O	O	O
774	Operation panel monitor selection 1	4A	CA	7	O	O	O	O	O	O
775	Operation panel monitor selection 2	4B	CB	7	O	O	O	O	O	O
776	Operation panel monitor selection 3	4C	CC	7	O	O	O	O	O	O
777	4 mA input fault operation frequency	4D	CD	7	O	O	O	O	O	O
778	4 mA input check filter	4E	CE	7	O	O	O	O	O	O
779	Operation frequency during communication error	4F	CF	7	O	O	O	O	O	O
791	Acceleration time in low-speed range	5B	DB	7	×	×	O	O	O	O
792	Deceleration time in low-speed range	5C	DC	7	×	×	O	O	O	O
799	Pulse increment setting for output power	63	E3	7	O	O	O	O	O	O
800	Control method selection	00	80	8	O	O	O	O	O	O
820	Speed control P gain 1	14	94	8	×	×	O	O	O	O
821	Speed control integral time 1	15	95	8	×	×	O	O	O	O

Pr.	Name	Instruction code*1			Control method*2			Parameter		
		Read	Write	Extended	V/F	Magnetic flux	PM	Copy*3	Clear*3	All clear*3
822	Speed setting filter 1	16	96	8	×	×	○	○	○	○
824	Torque control P gain 1 (current loop proportional gain)	18	98	8	×	×	○	○	○	○
825	Torque control integral time 1 (current loop integral time)	19	99	8	×	×	○	○	○	○
827	Torque detection filter 1	1B	9B	8	×	×	○	○	○	○
828	Parameter for manufacturer setting. Do not set.									
830	Speed control P gain 2	1E	9E	8	×	×	○	○	○	○
831	Speed control integral time 2	1F	9F	8	×	×	○	○	○	○
832	Speed setting filter 2	20	A0	8	×	×	○	○	○	○
834	Torque control P gain 2	22	A2	8	×	×	○	○	○	○
835	Torque control integral time 2	23	A3	8	×	×	○	○	○	○
837	Torque detection filter 2	25	A5	8	×	×	○	○	○	○
849	Analog input offset adjustment	31	B1	8	○	○	○	○	○	○
858	Terminal 4 function assignment	3A	BA	8	○	○	×	○	×	○
859	Torque current/Rated PM motor current	3B	BB	8	×	○	○	○	×	○
860	Second motor torque current/Rated PM motor current	3C	BC	8	×	○	○	○	×	○
864	Torque detection	40	C0	8	×	×	○	○	○	○
866	Torque monitoring reference	42	C2	8	×	○	○	○	○	○
867	AM output filter	43	C3	8	○	○	○	○	○	○
868	Terminal 1 function assignment	44	C4	8	○	○	×	○	×	○
869	Current output filter	45	C5	8	○	○	○	○	○	○
870	Speed detection hysteresis	46	C6	8	○	○	○	○	○	○
872	Input phase loss protection selection	48	C8	8	○	○	○	○	○	○
874	OLT level setting	4A	CA	8	×	×	○	○	○	○
882	Regeneration avoidance operation selection	52	D2	8	○	○	○	○	○	○
883	Regeneration avoidance operation level	53	D3	8	○	○	○	○	○	○
884	Regeneration avoidance at deceleration detection sensitivity	54	D4	8	○	○	○	○	○	○
885	Regeneration avoidance compensation frequency limit value	55	D5	8	○	○	○	○	○	○
886	Regeneration avoidance voltage gain	56	D6	8	○	○	○	○	○	○
888	Free parameter 1	58	D8	8	○	○	○	○	×	×
889	Free parameter 2	59	D9	8	○	○	○	○	×	×
891	Cumulative power monitor digit shifted times	5B	DB	8	○	○	○	○	○	○
892	Load factor	5C	DC	8	○	○	○	○	○	○
893	Energy saving monitor reference (motor capacity)	5D	DD	8	○	○	○	○	○	○
894	Control selection during commercial power-supply operation	5E	DE	8	○	○	○	○	○	○
895	Power saving rate reference value	5F	DF	8	○	○	○	○	○	○
896	Power unit cost	60	E0	8	○	○	○	○	○	○
897	Power saving monitor average time	61	E1	8	○	○	○	○	○	○
898	Power saving cumulative monitor clear	62	E2	8	○	○	○	○	×	○
899	Operation time rate (estimated value)	63	E3	8	○	○	○	○	○	○
C0 (900)	FM/CA terminal calibration	5C	DC	1	○	○	○	○	×	○
C1 (901)	AM terminal calibration	5D	DD	1	○	○	○	○	×	○
C2 (902)	Terminal 2 frequency setting bias frequency	5E	DE	1	○	○	○	○	×	○
C3 (902)	Terminal 2 frequency setting bias	5E	DE	1	○	○	○	○	×	○
125 (903)	Terminal 2 frequency setting gain frequency	5F	DF	1	○	○	○	○	×	○
C4 (903)	Terminal 2 frequency setting gain	5F	DF	1	○	○	○	○	×	○
C5 (904)	Terminal 4 frequency setting bias frequency	60	E0	1	○	○	○	○	×	○
C6 (904)	Terminal 4 frequency setting bias	60	E0	1	○	○	○	○	×	○
126 (905)	Terminal 4 frequency setting gain frequency	61	E1	1	○	○	○	○	×	○

Pr.	Name	Instruction code*1			Control method*2			Parameter		
		Read	Write	Extended	V/F	Magnetic flux	PM	Copy*3	Clear*3	All clear*3
C7 (905)	Terminal 4 frequency setting gain	61	E1	1	○	○	○	○	×	○
C12 (917)	Terminal 1 bias frequency (speed)	11	91	9	×	×	×	○	×	○
C13 (917)	Terminal 1 bias (speed)	11	91	9	×	×	×	○	×	○
C14 (918)	Terminal 1 gain frequency (speed)	12	92	9	×	×	×	○	×	○
C15 (918)	Terminal 1 gain (speed)	12	92	9	×	×	×	○	×	○
C16 (919)	Terminal 1 bias command (torque)	13	93	9	×	×	×	○	×	○
C17 (919)	Terminal 1 bias (torque)	13	93	9	×	×	×	○	×	○
C18 (920)	Terminal 1 gain command (torque)	14	94	9	×	×	×	○	×	○
C19 (920)	Terminal 1 gain (torque)	14	94	9	×	×	×	○	×	○
C8 (930)	Current output bias signal	1E	9E	9	○	○	○	○	○	○
C9 (930)	Current output bias current	1E	9E	9	○	○	○	○	○	○
C10 (931)	Current output gain signal	1F	9F	9	○	○	○	○	○	○
C11 (931)	Current output gain current	1F	9F	9	○	○	○	○	○	○
C38 (932)	Terminal 4 bias command (torque)	20	A0	9	×	×	×	○	×	○
C39 (932)	Terminal 4 bias (torque)	20	A0	9	×	×	×	○	×	○
C40 (933)	Terminal 4 gain command (torque)	21	A1	9	×	×	×	○	×	○
C41 (933)	Terminal 4 gain (torque)	21	A1	9	×	×	×	○	×	○
C42 (934)	PID display bias coefficient	22	A2	9	○	○	○	○	×	○
C43 (934)	PID display bias analog value	22	A2	9	○	○	○	○	×	○
C44 (935)	PID display gain coefficient	23	A3	9	○	○	○	○	×	○
C45 (935)	PID display gain analog value	23	A3	9	○	○	○	○	×	○
977	Input voltage mode selection	4D	CD	9	○	○	○	○	×	×
989	Parameter copy alarm release	59	D9	9	○	○	○	○	×	○
990	PU buzzer control	5A	DA	9	○	○	○	○	○	○
991	PU contrast adjustment	5B	DB	9	○	○	○	○	×	○
992	Operation panel setting dial push monitor selection	5C	DC	9	○	○	○	○	○	○
997	Fault initiation	61	E1	9	○	○	○	×	×	×
998	PM parameter initialization	62	E2	9	○	○	○	○	○	○
999	Automatic parameter setting	63	E3	9	○	○	○	×	×	○
1000	Parameter for manufacturer setting. Do not set.									
1002	Lq tuning target current adjustment coefficient	02	82	A	×	×	○	○	○	○
1006	Clock (year)	06	86	A	○	○	○	×	×	×
1007	Clock (month, day)	07	87	A	○	○	○	×	×	×
1008	Clock (hour, minute)	08	88	A	○	○	○	×	×	×
1013	Emergency drive running speed after retry reset	0D	8D	A	○	○	○	○	×	○
1015	Integral stop selection at limited frequency	0F	8F	A	○	○	○	○	○	○
1016	PTC thermistor protection detection time	10	90	A	○	○	○	○	×	○
1019	Analog meter voltage negative output selection AY	13	93	A	○	○	○	○	○	○
1020	Trace operation selection	14	94	A	○	○	○	○	○	○
1021	Trace mode selection	15	95	A	○	○	○	○	○	○

Pr.	Name	Instruction code*1			Control method*2			Parameter		
		Read	Write	Extended	V/F	Magnetic flux	PM	Copy*3	Clear*3	All clear*3
1022	Sampling cycle	16	96	A	O	O	O	O	O	O
1023	Number of analog channels	17	97	A	O	O	O	O	O	O
1024	Sampling auto start	18	98	A	O	O	O	O	O	O
1025	Trigger mode selection	19	99	A	O	O	O	O	O	O
1026	Number of sampling before trigger	1A	9A	A	O	O	O	O	O	O
1027	Analog source selection (1ch)	1B	9B	A	O	O	O	O	O	O
1028	Analog source selection (2ch)	1C	9C	A	O	O	O	O	O	O
1029	Analog source selection (3ch)	1D	9D	A	O	O	O	O	O	O
1030	Analog source selection (4ch)	1E	9E	A	O	O	O	O	O	O
1031	Analog source selection (5ch)	1F	9F	A	O	O	O	O	O	O
1032	Analog source selection (6ch)	20	A0	A	O	O	O	O	O	O
1033	Analog source selection (7ch)	21	A1	A	O	O	O	O	O	O
1034	Analog source selection (8ch)	22	A2	A	O	O	O	O	O	O
1035	Analog trigger channel	23	A3	A	O	O	O	O	O	O
1036	Analog trigger operation selection	24	A4	A	O	O	O	O	O	O
1037	Analog trigger level	25	A5	A	O	O	O	O	O	O
1038	Digital source selection (1ch)	26	A6	A	O	O	O	O	O	O
1039	Digital source selection (2ch)	27	A7	A	O	O	O	O	O	O
1040	Digital source selection (3ch)	28	A8	A	O	O	O	O	O	O
1041	Digital source selection (4ch)	29	A9	A	O	O	O	O	O	O
1042	Digital source selection (5ch)	2A	AA	A	O	O	O	O	O	O
1043	Digital source selection (6ch)	2B	AB	A	O	O	O	O	O	O
1044	Digital source selection (7ch)	2C	AC	A	O	O	O	O	O	O
1045	Digital source selection (8ch)	2D	AD	A	O	O	O	O	O	O
1046	Digital trigger channel	2E	AE	A	O	O	O	O	O	O
1047	Digital trigger operation selection	2F	AF	A	O	O	O	O	O	O
1048	Display-off waiting time	30	B0	A	O	O	O	O	O	O
1049	USB host reset	31	B1	A	O	O	O	×	×	×
1106	Torque monitor filter	06	86	B	O	O	O	O	O	O
1107	Running speed monitor filter	07	87	B	O	O	O	O	O	O
1108	Excitation current monitor filter	08	88	B	O	O	×	O	O	O
1132	Pre-charge change increment amount	20	A0	B	O	O	O	O	O	O
1133	Second pre-charge change increment amount	21	A1	B	O	O	O	O	O	O
1134 1135	Parameter for manufacturer setting. Do not set.									
1136	Second PID display bias coefficient	24	A4	B	O	O	O	O	×	O
1137	Second PID display bias analog value	25	A5	B	O	O	O	O	×	O
1138	Second PID display gain coefficient	26	A6	B	O	O	O	O	×	O
1139	Second PID display gain analog value	27	A7	B	O	O	O	O	×	O
1140	Second PID set point/deviation input selection	28	A8	B	O	O	O	O	O	O
1141	Second PID measured value input selection	29	A9	B	O	O	O	O	O	O
1142	Second PID unit selection	2A	AA	B	O	O	O	O	O	O
1143	Second PID upper limit	2B	AB	B	O	O	O	O	O	O
1144	Second PID lower limit	2C	AC	B	O	O	O	O	O	O
1145	Second PID deviation limit	2D	AD	B	O	O	O	O	O	O
1146	Second PID signal operation selection	2E	AE	B	O	O	O	O	O	O
1147	Second output interruption detection time	2F	AF	B	O	O	O	O	O	O
1148	Second output interruption detection level	30	B0	B	O	O	O	O	O	O
1149	Second output interruption cancel level	31	B1	B	O	O	O	O	O	O
1150	User parameters 1	32	B2	B	O	O	O	O	O	O
1151	User parameters 2	33	B3	B	O	O	O	O	O	O
1152	User parameters 3	34	B4	B	O	O	O	O	O	O
1153	User parameters 4	35	B5	B	O	O	O	O	O	O
1154	User parameters 5	36	B6	B	O	O	O	O	O	O
1155	User parameters 6	37	B7	B	O	O	O	O	O	O
1156	User parameters 7	38	B8	B	O	O	O	O	O	O
1157	User parameters 8	39	B9	B	O	O	O	O	O	O
1158	User parameters 9	3A	BA	B	O	O	O	O	O	O
1159	User parameters 10	3B	BB	B	O	O	O	O	O	O
1160	User parameters 11	3C	BC	B	O	O	O	O	O	O

Pr.	Name	Instruction code*1			Control method*2			Parameter		
		Read	Write	Extended	V/F	Magnetic flux	PM	Copy*3	Clear*3	All clear*3
1161	User parameters 12	3D	BD	B	O	O	O	O	O	O
1162	User parameters 13	3E	BE	B	O	O	O	O	O	O
1163	User parameters 14	3F	BF	B	O	O	O	O	O	O
1164	User parameters 15	40	C0	B	O	O	O	O	O	O
1165	User parameters 16	41	C1	B	O	O	O	O	O	O
1166	User parameters 17	42	C2	B	O	O	O	O	O	O
1167	User parameters 18	43	C3	B	O	O	O	O	O	O
1168	User parameters 19	44	C4	B	O	O	O	O	O	O
1169	User parameters 20	45	C5	B	O	O	O	O	O	O
1170	User parameters 21	46	C6	B	O	O	O	O	O	O
1171	User parameters 22	47	C7	B	O	O	O	O	O	O
1172	User parameters 23	48	C8	B	O	O	O	O	O	O
1173	User parameters 24	49	C9	B	O	O	O	O	O	O
1174	User parameters 25	4A	CA	B	O	O	O	O	O	O
1175	User parameters 26	4B	CB	B	O	O	O	O	O	O
1176	User parameters 27	4C	CC	B	O	O	O	O	O	O
1177	User parameters 28	4D	CD	B	O	O	O	O	O	O
1178	User parameters 29	4E	CE	B	O	O	O	O	O	O
1179	User parameters 30	4F	CF	B	O	O	O	O	O	O
1180	User parameters 31	50	D0	B	O	O	O	O	O	O
1181	User parameters 32	51	D1	B	O	O	O	O	O	O
1182	User parameters 33	52	D2	B	O	O	O	O	O	O
1183	User parameters 34	53	D3	B	O	O	O	O	O	O
1184	User parameters 35	54	D4	B	O	O	O	O	O	O
1185	User parameters 36	55	D5	B	O	O	O	O	O	O
1186	User parameters 37	56	D6	B	O	O	O	O	O	O
1187	User parameters 38	57	D7	B	O	O	O	O	O	O
1188	User parameters 39	58	D8	B	O	O	O	O	O	O
1189	User parameters 40	59	D9	B	O	O	O	O	O	O
1190	User parameters 41	5A	DA	B	O	O	O	O	O	O
1191	User parameters 42	5B	DB	B	O	O	O	O	O	O
1192	User parameters 43	5C	DC	B	O	O	O	O	O	O
1193	User parameters 44	5D	DD	B	O	O	O	O	O	O
1194	User parameters 45	5E	DE	B	O	O	O	O	O	O
1195	User parameters 46	5F	DF	B	O	O	O	O	O	O
1196	User parameters 47	60	E0	B	O	O	O	O	O	O
1197	User parameters 48	61	E1	B	O	O	O	O	O	O
1198	User parameters 49	62	E2	B	O	O	O	O	O	O
1199	User parameters 50	63	E3	B	O	O	O	O	O	O
1211	PID gain tuning timeout time	0B	8B	C	O	O	O	O	O	O
1212	Step manipulated amount	0C	8C	C	O	O	O	O	O	O
1213	Step responding sampling cycle	0D	8D	C	O	O	O	O	O	O
1214	Timeout time after the maximum slope	0E	8E	C	O	O	O	O	O	O
1215	Limit cycle output upper limit	0F	8F	C	O	O	O	O	O	O
1216	Limit cycle output lower limit	10	90	C	O	O	O	O	O	O
1217	Limit cycle hysteresis	11	91	C	O	O	O	O	O	O
1218	PID gain tuning setting	12	92	C	O	O	O	O	O	O
1219	PID gain tuning start/status	13	93	C	O	O	O	×	×	×
1460	PID multistage set point 1	3C	BC	E	O	O	O	O	O	O
1461	PID multistage set point 2	3D	BD	E	O	O	O	O	O	O
1462	PID multistage set point 3	3E	BE	E	O	O	O	O	O	O
1463	PID multistage set point 4	3F	BF	E	O	O	O	O	O	O
1464	PID multistage set point 5	40	C0	E	O	O	O	O	O	O
1465	PID multistage set point 6	41	C1	E	O	O	O	O	O	O
1466	PID multistage set point 7	42	C2	E	O	O	O	O	O	O
1469	Number of cleaning times monitor	45	C5	E	O	O	O	×	×	×
1470	Number of cleaning times setting	46	C6	E	O	O	O	O	O	O
1471	Cleaning trigger selection	47	C7	E	O	O	O	O	O	O
1472	Cleaning reverse rotation frequency	48	C8	E	O	O	O	O	O	O
1473	Cleaning reverse rotation operation time	49	C9	E	O	O	O	O	O	O

Pr.	Name	Instruction code*1			Control method*2			Parameter		
		Read	Write	Extended	V/F	Magnetic flux	PM	Copy*3	Clear*3	All clear*3
1474	Cleaning forward rotation frequency	4A	CA	E	O	O	O	O	O	O
1475	Cleaning forward rotation operation time	4B	CB	E	O	O	O	O	O	O
1476	Cleaning stop time	4C	CC	E	O	O	O	O	O	O
1477	Cleaning acceleration time	4D	CD	E	O	O	O	O	O	O
1478	Cleaning deceleration time	4E	CE	E	O	O	O	O	O	O
1479	Cleaning time trigger	4F	CF	E	O	O	O	O	O	O
1480	Load characteristics measurement mode	50	D0	E	O	O	O	O	O	O
1481	Load characteristics load reference 1	51	D1	E	O	O	O	O	O	O
1482	Load characteristics load reference 2	52	D2	E	O	O	O	O	O	O
1483	Load characteristics load reference 3	53	D3	E	O	O	O	O	O	O
1484	Load characteristics load reference 4	54	D4	E	O	O	O	O	O	O
1485	Load characteristics load reference 5	55	D5	E	O	O	O	O	O	O
1486	Load characteristics maximum frequency	56	D6	E	O	O	O	O	O	O
1487	Load characteristics minimum frequency	57	D7	E	O	O	O	O	O	O
1488	Upper limit warning detection width	58	D8	E	O	O	O	O	O	O
1489	Lower limit warning detection width	59	D9	E	O	O	O	O	O	O
1490	Upper limit fault detection width	5A	DA	E	O	O	O	O	O	O
1491	Lower limit fault detection width	5B	DB	E	O	O	O	O	O	O
1492	Load status detection signal delay time / load reference measurement waiting time	5C	DC	E	O	O	O	O	O	O

Appendix4 For customers using HMS network options

◆List of inverter monitored items

The following items can be set using a communication option.

16bit data

No.	Description	Unit	Type	Read/ write
H0000	No data	-	-	-
H0001	Output frequency	0.01Hz	unsigned	R
H0002	Output current	0.01A/0.1A	unsigned	R
H0003	Output voltage	0.1V	unsigned	R
H0004	reserved	-	-	-
H0005	Frequency setting value	0.01Hz	unsigned	R
H0006	Motor speed	1r/min	unsigned	R
H0007	Motor torque	0.1%	unsigned	R
H0008	Converter output voltage	0.1V	unsigned	R
H0009	reserved	-	-	-
H000A	Electric thermal relay function load factor	0.1%	unsigned	R
H000B	Output current peak value	0.01A/0.1A	unsigned	R
H000C	Converter output voltage peak value	0.1V	unsigned	R
H000D	Input power	0.01kW/0.1kW	unsigned	R
H000E	Output power	0.01kW/0.1kW	unsigned	R
H000F	Input terminal status*1	-	-	R
H0010	Output terminal status*1	-	-	R
H0011	Load meter	0.1%	unsigned	R
H0012	Motor excitation current	0.01A/0.1A	unsigned	R
H0013	reserved	-	-	-
H0014	Cumulative energization time	1h	unsigned	R
H0015	reserved	-	-	-
H0016	Orientation status	1	unsigned	R
H0017	Actual operation time	1h	unsigned	R
H0018	Motor load factor	0.1%	unsigned	R
H0019	Cumulative power	1kWh	unsigned	R
H001A to H0021	reserved	-	-	-
H0022	Motor output	0.1kW	unsigend	R
H0023 to H002D	reserved	-	-	-
H002E	Motor temperature			R
H002F to H0031	reserved	-	-	-
H0032	Power saving effect	-	unsigned	R
H0033	Cumulative saving power	-	unsigned	R
H0034	PID set point	0.1%	unsigned	R/W
H0035	PID measured value	0.1%	unsigned	R/W
H0036	PID deviation	0.1%	unsigned	R/W
H0037 to H0039	reserved	-	-	-
H003A	Option input terminal status1*1	-	-	R
H003B	Option input terminal status2*1	-	-	R
H003C	Option output terminal status*1	-	-	R
H003D	Motor thermal load factor	0.1%	unsigned	R
H003E	Transistor thermal load factor	0.1%	unsigned	R
H003F	reserved	-	-	-
H0040	PTC thermistor resistance	ohm	unsigned	R

No.	Description	Unit	Type	Read/ write
H0041	Output power (with regenerative display)			R
H0042	Cumulative regenerative power			R
H0043	reserved			
H0044	2nd PID set point	0.1%	unsigned	R/W
H0045	2nd PID measured value	0.1%	unsigned	R/W
H0046	2nd PID deviation	0.1%	unsigned	R/W
H0048 to H004F	reserved	-	-	-
H0050	Integrated power on time			R
H0051	Running time			R
H0052	Saving energy monitor			R
H0053	reserved	-	-	-
H0054	Fault code (1)	-	-	R
H0055	Fault code (2)	-	-	R
H0056	Fault code (3)	-	-	R
H0057	Fault code (4)	-	-	R
H0058	Fault code (5)	-	-	R
H0059	Fault code (6)	-	-	R
H005A	Fault code (7)	-	-	R
H005B	Fault code (8)	-	-	R
H00F9	Run command*2	-	-	R/W
H00FA to H01FF	reserved	-	-	-

*1 For details, refer to page 263.

*2 Run command

Users can specify the terminal function using this data. These bits function is depending on inverter parameter setting. (Refer to page 329)

b15															b0
-	-	-	-	RES	STP (STOP)	CS	JOG	MRS	RT	RH	RM	RL	-	-	AU

<32bit data>

No.	Description	Unit	Type	Read/ write
H0200	reserved	-	-	-
H0201	Output frequency (0-15bit)	0.01Hz	signed	R
H0202	Output frequency (16-31bit)			
H0203	Setting frsequency (0-15bit)	0.01Hz	signed	R
H0204	Setting frequency (16-31bit)			
H0205	Motor rotation (0-15bit)	1r/min	signed	R
H0206	Motor rotation (16-31bit)			
H0207	Load meter (0-15bit)	0.1%	signed	R
H0208	Load meter (16-31bit)			
H0209, H020A	reserved	-	-	-
H020B	Watt-hour meter (1kWh step) (0-15bit)	1kWh	unsigned	R
H020C	Watt-hour meter (1kWh step) (16-31bit)			
H020D	Watt-hour meter (0.1/0.01kWh step) (0-15bit)	0.1/0.01kWh	unsigned	R
H020E	Watt-hour meter(0.1/0.01kWh step) (16-31bit)			
H020F to H03FF	reserved	-	-	-

REVISIONS

*The manual number is given on the bottom left of the back cover.

Print Date	*Manual Number	Revision
Jul. 2014	IB(NA)-0600547ENG-A	First edition

⚠ For Maximum Safety

- Mitsubishi inverters are not designed or manufactured to be used in equipment or systems in situations that can affect or endanger human life.
- When considering this product for operation in special applications such as machinery or systems used in passenger transportation, medical, aerospace, atomic power, electric power, or submarine repeating applications, please contact your nearest Mitsubishi sales representative.
- Although this product was manufactured under conditions of strict quality control, you are strongly advised to install safety devices to prevent serious accidents when it is used in facilities where breakdowns of the product are likely to cause a serious accident.

Please do not use this product for loads other than three-phase induction motors.

MITSUBISHI ELECTRIC CORPORATION
HEAD OFFICE: TOKYO BUILDING 2-7-3, MARUNOUCHI, CHIYODA-KU, TOKYO 100-8310, JAPAN

IB(NA)-0600547ENG-A(1407)MEE Printed in Japan
Specifications subject to change without notice.